THIS DRAWING IS UNPUBLISHED. RELEASED FOR PUBLICATION 2000.
© COPYRIGHT 1998 BY TYCO ELECTRONICS CORPORATION. ALL RIGHTS RESERVED.

LOC	DIST
A1	–

REVISIONS

P	LTR	DESCRIPTION	DATE	DWN	APVD
	A2	Released as per ECR-08-016634	02.July.2008	SP	TS

PN 1-6

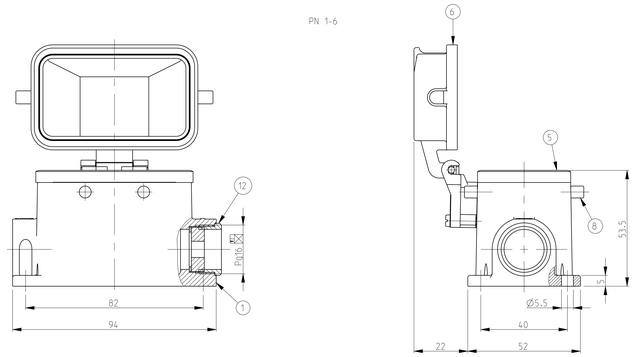

PN 2-2

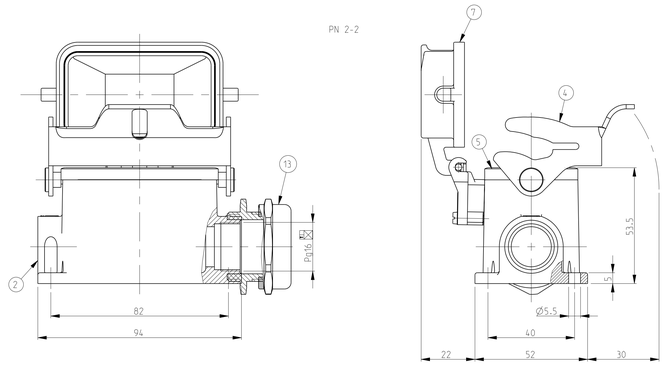

PN 2-6

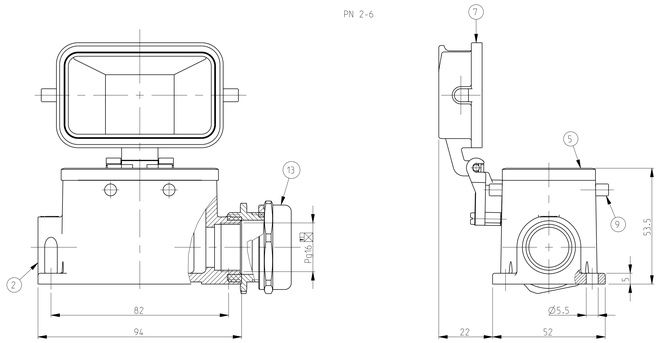

PN 9-2

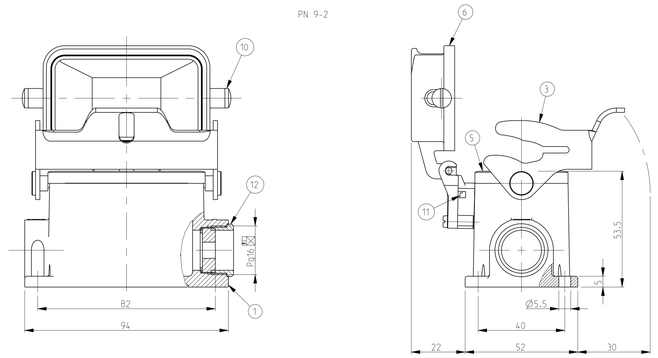

PN 1-2

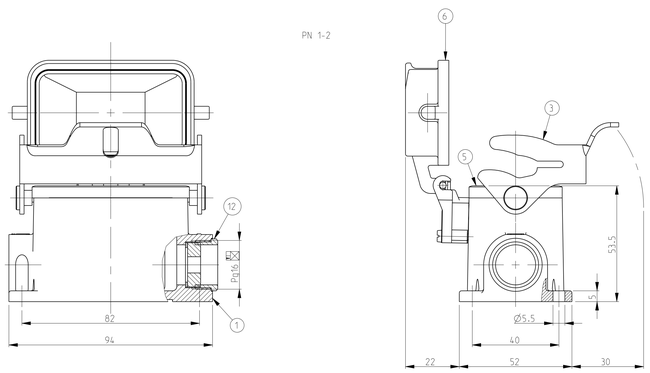

NOTES.

1 Material:Housing:Aluminium Diecasting Alloy
  Seals:Neoprene

2 Surface:Varnish grey
  -Aluminium Oxide +Varnish Black
  -Grey

3 Varnish on the inside not necessary

4 Packaging
  Quantity 5 Pieces in a boX

PN 1-6

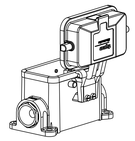

SCALE 1:2

PN 2-6

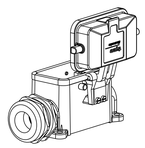

SCALE 1:2

PN 1-2

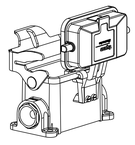

SCALE 1:2

PN 2-2

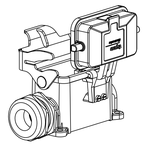

SCALE 1:2

PN 9-2

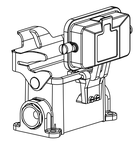

SCALE 1:2

9-2	2-2	1-2	2-6	1-6	DESCRIPTION	MATERIAL	SURFACE	COLOR	ITEM NO	NOTES
	1		1		Hut-Gland fitting round	Brass	Nickel plated	Blue	13	Pg16
1		1		1	DS-Cable fitting round	Brass	Nickel plated	Blue	12	Pg16
1					Cylinder screw M4x8	Steel	Zinc plated	Blue	11	
2					LB-Clip bolt	Steel	Zinc plated	Blue	10	
			4		VS-Clip bolt	Stainless steel	Blank		9	
				4	VS-Clip bolt	Steel	Zinc plated	Blue	8	
	1		1		Cover HB-K	Aluminium	Aluminium oxide	Black	7	
1		1		1	Cover HB	Aluminium		Grey	6	
1	1	1	1	1	Profile seal	Neoprene		Black	5	
	1				LB-Side clip	Stainless steel	Blank		4	
1		1			LB-Side clip	Steel	Zinc plated	Blue	3	
	1		1		Surface mounted housing side entry HB-K	Aluminium	Aluminium oxide	Black	2	
1		1		1	Surface mounted housing side entry HB	Aluminium		Grey	1	

ORDERING TEXT

HB.10.SGD.1.16
HB-K.10.SGD.1.16
HB.10.SGD-LB.1.16
HB-K.10.SGD-LB.1.16
HB.10.SGD-LB.1.16

THIS DRAWING IS PROPERTY OF TYCO ELECTRONICS CORPORATION
IT IS SUBMITTED IN CONFIDENCE AND MUST NOT BE REPRODUCED OR MADE
AVAILABLE TO ANYONE FOR THIRD PARTY USE.

DWN	Schneider	30.04.03
CHK	Schweiger	30.04.03
APVD	–	

Tyco Electronics

Tyco Electronics,AMP,GmbH
D-53819,Neunkirchen,Germany

DIMENSIONS: mm

TOLERANCES UNLESS OTHERWISE SPECIFIED:
X.XX ±0.4
X.XXX ±0.2
X.XXX ±0.1
D PLC ±
I PLC ±
Z PLC ±
S PLC ±
A PLC ±
ANGLES ±
FINISH

MATERIAL

PRODUCT SPEC –

APPLICATION SPEC –

WEIGHT –

CUSTOMER DRAWING

NAME
Surface mounted housing side entry
HB.10.SGD.1.16

SIZE	CAGE CODE	DRAWING NO	RESTRICTED TO
A0	00779	C-1102285	

SCALE 1:1 SHEET 1 OF 1 REV A2

AMP 4806 REV 31MAR2000

Pro/ENGINEER DRAWING