THIS DRAWING IS UNPUBLISHED. RELEASED FOR PUBLICATION 2000
© COPYRIGHT 1998 BY - ALL RIGHTS RESERVED.

REVISIONS

P	LTR	DESCRIPTION	DATE	DWN	APVD
	A8	ECR-09-015566	10JUL2009	SR	GW
	A9	ECR-16-015318	16AUG2017	GR	MKO
	A10	ECR-16-016768	15NOV2017	GR	MKO
	A11	ECR-17-013084	29MAR2018	SG	MKO

PN 1-6. 2-6 & 0-3

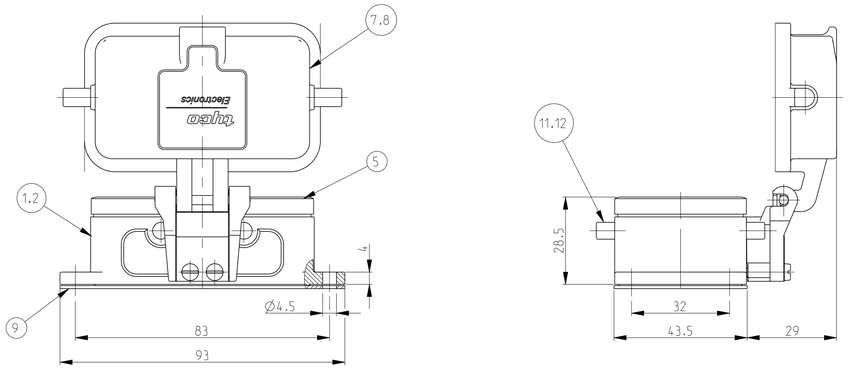

PANEL-CUT OUT

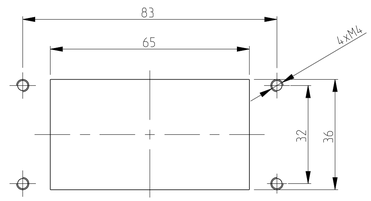

NOTES

1 Material : Housing : Aluminium diecasting alloy

2 Surface: Varnisch-Black
-Aluminium oxide+Varnisch black
-ChromitAL TCP-Passivation
-Grey

3 Varnisch on the inside not necessary

4 Packaging
Qentity 5 pieces in a box

PN 1-2. 2-2 .0-1 & 0-5

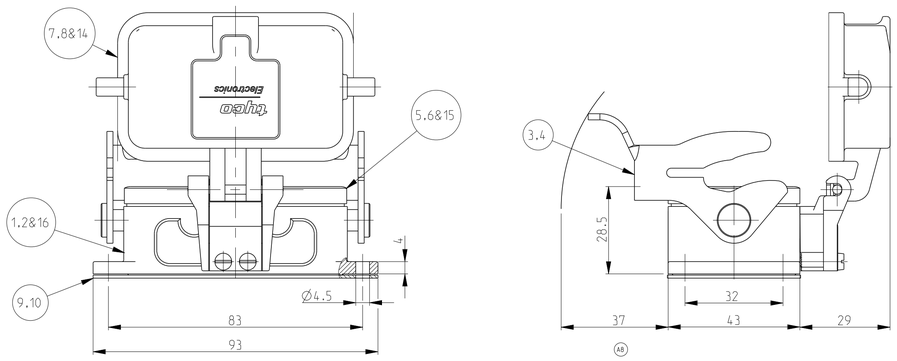

PN 0-4

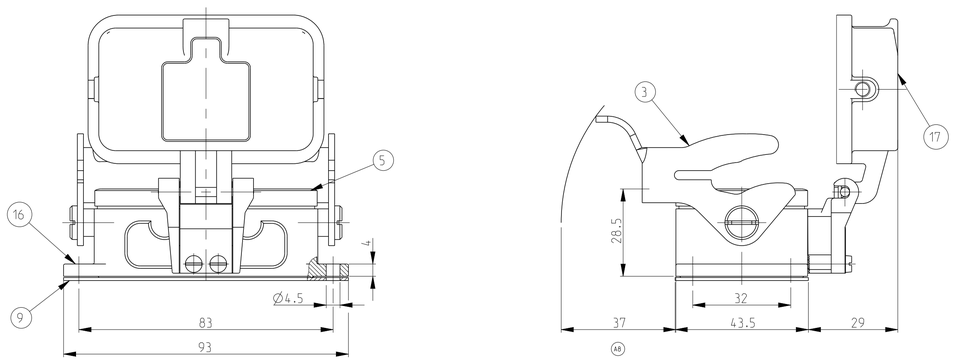

PN 0-4

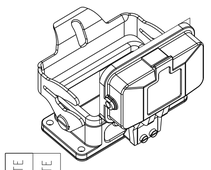

SCALE 1:2

PN 1-2. 2-2. ~~0-1~~ & 0-5

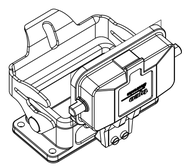

SCALE 1:2

PN 1-6. 2-6 & 0-3

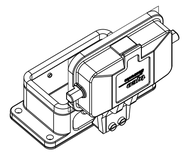

SCALE 1:2

0-5	0-4	0-1	2-6	1-6	2-2	1-2	DESCRIPTION	MATERIAL	SURFACE	COLOR	ITEM NO	NOTES
	OBSOLETE	OBSOLETE										
1							Cover	Aluminium		Grey A8	17	
1							Surface mounted housing bottom entry HB	Aluminium		Grey A8	16	
	1						Profile seal	Neoprene		Black	15	Conductive
	1						Cover	Aluminium	SEE NOTE 4	Black	14	
	1						Surface mounted housing bottom entry HB-EMV	Aluminium	SEE NOTE 4	Black	13	
			4				Clip bolt	Stainless steel		Blank	12	
				4			Clip bolt	Steel	Zinc plated	Blue	11	
		1					Flange seal	Viton		Black	10	
1	1		1	1	1	1	Flange seal	Neoprene		Black	9	
		1	1		1		Cover	Aluminium	Aluminium oxide	Black	8	
				1		1	Cover	Aluminium		Grey	7	
		1					Profile seal	Viton		Grey	6	
1			1	1	1	1	Profile seal	Neoprene		Black	5	
		1			1		LB-Side clip	Stainless steel		Blank	4	
1	1					1	LB-Side clip	Steel	Zinc plated	Blue	3	
		1	1		1		Surface mounted housing bottom entry HB-K	Aluminium	Aluminium Oxide	Black	2	
				1		1	Surface mounted housing bottom entry HB	Aluminium		Grey	1	
HB.10.AGD-LB	HB-EMV.10.AGD-LB	HB-K.10.AGD-LB-V	HB-K.10.AGD	HB.10.AGD	HB-K.10.AGD-LB	HB.10.AGD-LB	ORDERINHG TEXT					

THIS DRAWING IS A CONTROLLED DOCUMENT.

DIMENSIONS: mm

TOLERANCES UNLESS OTHERWISE SPECIFIED:
+/-0.25mm
+/-0.010 inch
+/-0.4mm
+/-0.016 inch
0 PLC ±
1 PLC ±
2 PLC ±
3 PLC ±
4 PLC ±
ANGLES ±

MATERIAL

FINISH

DWN Schneider 18.05.2000
CHK Schweiger 18.05.2000
APVD

PRODUCT SPEC

APPLICATION SPEC

WEIGHT

CUSTOMER DRAWING

TE Connectivity

NAME Surface mounted housing bottom entry HB.10.AGD

SIZE	CAGE CODE	DRAWING NO	RESTRICTED TO
A1	00779	C-1102283	

SCALE 1:1 SHEET 1 OF 1 REV A11

4805 (3/13)