具有 Eco-mode™ 的 4.5V 至 18V 输入，6A 同步降压转换器

查询样品: **TPS54628**

特性

- **D-CAP2™** 模式支持快速瞬态响应
- 低输出纹波，支持陶瓷输出电容器
- 宽泛的 **V_{IN}**输入电压范围：**4.5V** 至 **18V**
- 输出电压范围：**0.76V** 至 **5.5V**
- 高效率集成型场效应晶体管 **(FET)**
  针对较低占空比应用进行了优化
  -36mΩ（高侧）与 **28mΩ** （低侧）
- 关断时的高效率，流耗不足 **10μA**
- 初始带隙参考的高精度
- 可调软启动
- 预偏置软启动
- **650kHz** 开关频率 **(f_{SW})**
- 逐周期过流限制
- 自动跳跃 **Eco-mode™** 为了在轻负载下实现高效率

应用范围

- 低电压系统的广泛应用
  - 数字电视电源
  - 高清 **Blu-ray Disc™** 播放器
  - 网络家庭终端设备
  - 数字机顶盒 **(STB)**

说明

TPS54628 是一款自适应接通时间 D-CAP2™ 模式同步降压转换器。 TPS54628 可帮助系统设计人员通过一个成本有效、低组件数量、低待机电流解决方案来完成各种终端设备的电源总线调节器集。 TPS54628 的主控制环路使用 D-CAP2™ 模式控制，此控制方式在无需外部补偿组件的情况下提供快速瞬态响应。 自适应接通时间控制支持较高负载状态下的脉宽调制 (PWM) 模式与轻负载下的 Eco-mode™ 工作模式之间的无缝转换。 Eco-mode™ 使 TPS54628 能够在较轻负载条件下保持高效率。 TPS54628 的私有电路还使该器件可采用诸如高分子有机半导体固体电容器 (POSCAP) 或 SP-CAP 等低等效串联电阻 (ESR) 输出电容器以及超低 ESR 陶瓷电容器。 该器件的工作输入电压介于 4.5V 至 18V VIN 之间。 输出电压可在 0.76V 与 5.5V 之间进行设定。该器件还特有一个可调软启动时间。 TPS54628 采用 8 引脚 DDA 封装，并针对 -40°C 到 85°C 的工作温度范围内的运行而设计。

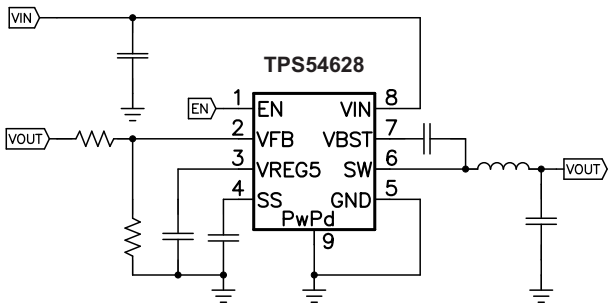

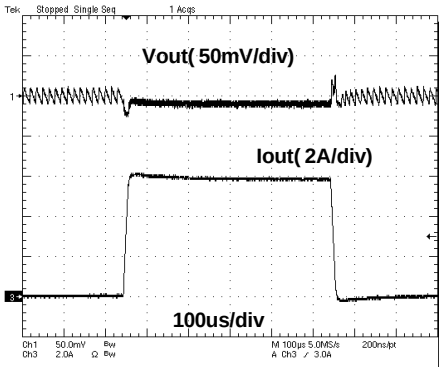

Please be aware that an important notice concerning availability, standard warranty, and use in critical applications of Texas Instruments semiconductor products and disclaimers thereto appears at the end of this data sheet.
D-CAP2, Eco-mode are trademarks of Texas Instruments.
Blu-ray Disc is a trademark of Blu-ray Disc Association.

PRODUCTION DATA information is current as of publication date. Products conform to specifications per the terms of the Texas Instruments standard warranty. Production processing does not necessarily include testing of all parameters.

Copyright © 2013, Texas Instruments Incorporated
English Data Sheet: SLVSBW5

These devices have limited built-in ESD protection. The leads should be shorted together or the device placed in conductive foam during storage or handling to prevent electrostatic damage to the MOS gates.

ORDERING INFORMATION(1)

T_A	PACKAGE(2) (3)	ORDERABLE PART NUMBER	PIN	TRANSPORT MEDIA
–40°C to 85°C	DDA	TPS54628DDA	8	Tube
		TPS54628DDAR		Tape and Reel

(1) For the most current package and ordering information, see the Package Option Addendum at the end of this document, or see the TI web site at www.ti.com.
(2) Package drawings, thermal data, and symbolization are available at www.ti.com/packaging.
(3) All package options have Cu NIPDAU lead/ball finish.

ABSOLUTE MAXIMUM RATINGS

over operating free-air temperature range (unless otherwise noted) (1)

		VALUE		UNIT
		MIN	MAX	
Input voltage range	VIN, EN	–0.3	20	V
	VBST	–0.3	26	
	VBST (10 ns transient)	–0.3	28	
	VBST (vs SW)	–0.3	6.5	
	VFB, SS	–0.3	6.5	
	SW	–2	20	
	SW (10 ns transient)	–3	22	
Output voltage range	VREG5	–0.3	6.5	V
	GND	–0.3	0.3	
Voltage from GND to thermal pad, V_{diff}		–0.2	0.2	V
Electrostatic discharge	Human Body Model (HBM)		2	kV
	Charged Device Model (CDM)		500	V
Operating junction temperature, T_J		–40	150	°C
Storage temperature, T_{stg}		–55	150	

(1) Stresses beyond those listed under *absolute maximum ratings* may cause permanent damage to the device. These are stress ratings only, and functional operation of the device at these or any other conditions beyond those indicated under *recommended operating conditions* is not implied. Exposure to absolute-maximum-rated conditions for extended periods may affect device reliability.

THERMAL INFORMATION

THERMAL METRIC(1)		TPS54628 DDA (8 PINS)	UNITS
θ_{JA}	Junction-to-ambient thermal resistance	43.5	°C/W
θ_{JCtop}	Junction-to-case (top) thermal resistance	49.4	
θ_{JB}	Junction-to-board thermal resistance	25.6	
ψ_{JT}	Junction-to-top characterization parameter	7.4	
ψ_{JB}	Junction-to-board characterization parameter	25.5	
θ_{JCbot}	Junction-to-case (bottom) thermal resistance	5.2	

(1) For more information about traditional and new thermal metrics, see the IC Package Thermal Metrics application report, SPRA953.

Copyright © 2013, Texas Instruments Incorporated

RECOMMENDED OPERATING CONDITIONS

over operating free-air temperature range, (unless otherwise noted)

			MIN	MAX	UNIT
V_{IN}	Supply input voltage range		4.5	18	V
V_I	Input voltage range	VBST	–0.1	24	V
		VBST (10 ns transient)	–0.1	27	
		VBST(vs SW)	–0.1	6.0	
		SS	–0.1	5.7	
		EN	–0.1	18	
		VFB	–0.1	5.5	
		SW	–1.8	18	
		SW (10 ns transient)	–3	21	
		GND	–0.1	0.1	
V_O	Output voltage range	VREG5	–0.1	5.7	V
I_O	Output Current range	I_{VREG5}	0	5	mA
T_A	Operating free-air temperature		–40	85	°C
T_J	Operating junction temperature		–40	150	°C

ELECTRICAL CHARACTERISTICS

over operating free-air temperature range, V_{IN} = 12 V (unless otherwise noted)

PARAMETER		TEST CONDITIONS	MIN	TYP	MAX	UNIT
SUPPLY CURRENT						
I_{VIN}	Operating - non-switching supply current	V_{IN} current, T_A = 25°C, EN = 5 V, V_{FB} = 0.8 V		950	1400	μA
I_{VINSDN}	Shutdown supply current	V_{IN} current, T_A = 25°C, EN = 0 V		3	10	μA
LOGIC THRESHOLD						
V_{EN}	EN high-level input voltage	EN	1.6			V
	EN low-level input voltage	EN			0.6	V
R_{EN}	EN pin resistance to GND	V_{EN} = 12 V	200	400	800	kΩ
V_{FB} VOLTAGE AND DISCHARGE RESISTANCE						
V_{FBTH}	V_{FB} threshold voltage	T_A = 25°C, V_O = 1.05 V, I_O = 10 mA, Eco-mode™ operation		772		mV
		T_A = 25°C, V_O = 1.05 V, continuous mode operation	757	765	773	mV
		T_A = -40 to 85°C, V_O = 1.05 V, continuous mode operation(1)	751	765	779	mV
I_{VFB}	V_{FB} input current	V_{FB} = 0.8 V, T_A = 25°C		0	±0.15	μA
V_{REG5} OUTPUT						
V_{VREG5}	V_{REG5} output voltage	T_A = 25°C, 6 V < V_{IN} < 18 V, 0 < I_{VREG5} < 5 mA	5.2	5.5	5.7	V
I_{VREG5}	Output current	V_{IN} = 6 V, V_{REG5} = 4.0 V, T_A = 25°C	20			mA
V_{OUT} DISCHARGE						
R_{DISCHG}	V_{OUT} discharge resistance	EN = 0 V, SW = 0.5 V, T_A = 25°C		500	800	Ω
MOSFET						
$R_{DS(on)}$	High side switch resistance	25°C, V_{BST} - SW = 5.5 V		36		mΩ
	Low side switch resistance	25°C		28		mΩ
CURRENT LIMIT						
I_{OCL}	Current limit	L out = 1.5 μH(1)	6.7	7.3	8.9	A

(1) Not production tested.

Copyright © 2013, Texas Instruments Incorporated

ELECTRICAL CHARACTERISTICS (continued)

over operating free-air temperature range, V_{IN} = 12 V (unless otherwise noted)

PARAMETER		TEST CONDITIONS	MIN	TYP	MAX	UNIT
THERMAL SHUTDOWN						
T_{SDN}	Thermal shutdown threshold	Shutdown temperature (2)		165		°C
		Hysteresis (2)		35		
ON-TIME TIMER CONTROL						
t_{ON}	On time	V_{IN} = 12 V, V_O = 1.05 V		150		ns
$t_{OFF(MIN)}$	Minimum off time	T_A = 25°C, V_{FB} = 0.7 V		260	310	ns
SOFT START						
I_{SS}	SS charge current	V_{SS} = 1 V	4.2	6	7.8	µA
	SS discharge current	V_{SS} = 0.5 V	1.5	3.3		mA
HICCUP AND OVER-VOLTAGE PROTECTION						
V_{OVP}	Output OVP threshold	OVP Detect (L > H)		125%		
V_{HICCUP}	Output Hiccup threshold	Hiccup detect (H > L)		65%		
$T_{HICCUPDELAY}$	Output Hiccup delay	To hiccup state		250		µsec
$T_{HICCUPENDELAY}$	Output Hiccup Enable delay	Relative to soft-start time		x1.7		
UVLO						
UVLO	UVLO threshold	Wake up V_{REG5} voltage	3.45	3.75	4.05	V
		Hysteresis V_{REG5} voltage	0.13	0.32	0.48	

(2) Not production tested.

Copyright © 2013, Texas Instruments Incorporated

DEVICE INFORMATION

DDA PACKAGE
(TOP VIEW)

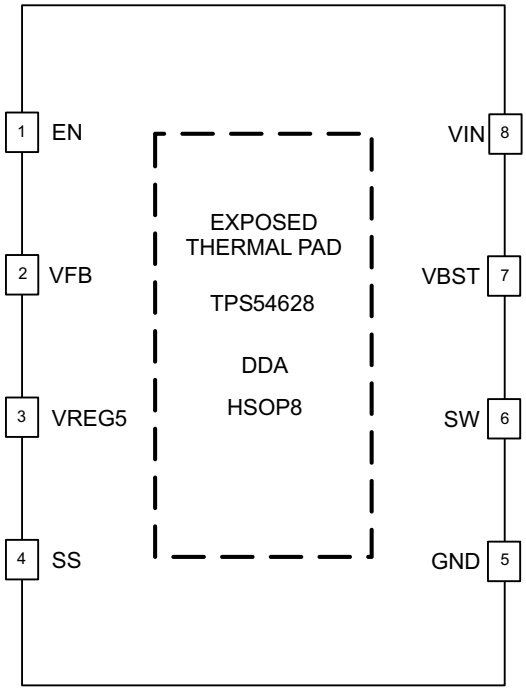

PIN FUNCTIONS

PIN		DESCRIPTION
NAME	NO.	
EN	1	Enable input control. EN is active high and must be pulled up to enable the device.
VFB	2	Converter feedback input. Connect to output voltage with feedback resistor divider.
VREG5	3	5.5 V power supply output. A capacitor (typical 1 µF) should be connected to GND. VREG5 is not active when EN is low.
SS	4	Soft-start control. An external capacitor should be connected to GND.
GND	5	Ground pin. Power ground return for switching circuit. Connect sensitive SS and VFB returns to GND at a single point.
SW	6	Switch node connection between high-side NFET and low-side NFET.
VBST	7	Supply input for the high-side FET gate drive circuit. Connect 0.1 µF capacitor between VBST and SW pins. An internal diode is connected between VREG5 and VBST.
VIN	8	Input voltage supply pin.
Exposed Thermal Pad	Back side	Thermal pad of the package. Must be soldered to achieve appropriate dissipation. Must be connected to GND.

Copyright © 2013, Texas Instruments Incorporated

FUNCTIONAL BLOCK DIAGRAM

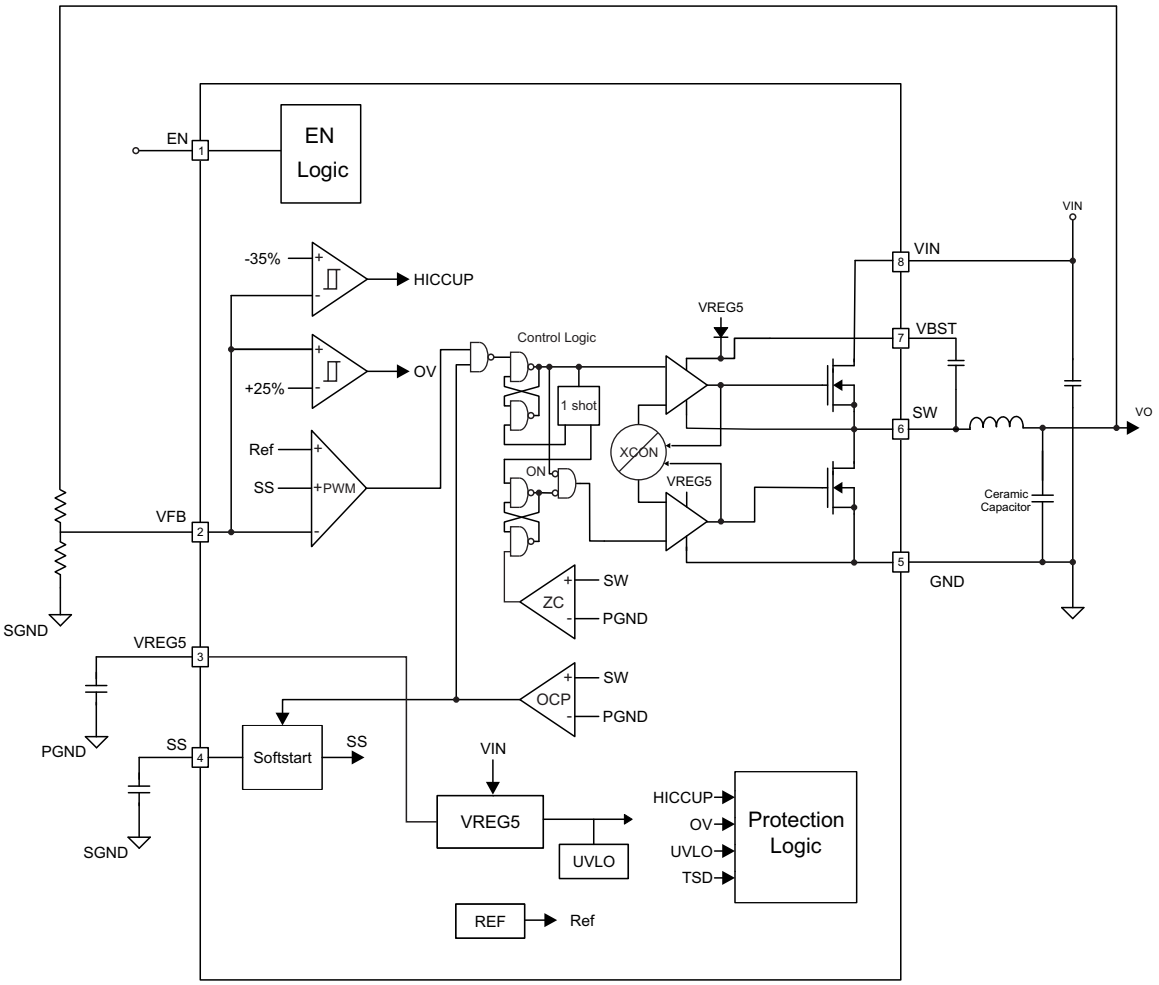

Copyright © 2013, Texas Instruments Incorporated

OVERVIEW

The TPS54628 is a 6-A Eco-mode™ synchronous step-down (buck) converter with two integrated N-channel MOSFETs. It operates using D-CAP2™ mode control. The fast transient response of D-CAP2™ control reduces the output capacitance required to meet a specific level of performance. Proprietary internal circuitry allows the use of low ESR output capacitors including ceramic and special polymer types.

DETAILED DESCRIPTION

PWM Operation

The main control loop of the TPS54628 is an adaptive on-time pulse width modulation (PWM) controller that supports a proprietary D-CAP2™ mode control. D-CAP2™ mode control combines constant on-time control with an internal compensation circuit for pseudo-fixed frequency and low external component count configuration with both low ESR and ceramic output capacitors. It is stable even with virtually no ripple at the output.

At the beginning of each cycle, the high-side MOSFET is turned on. This MOSFET is turned off after internal one shot timer expires. This one shot is set by the converter input voltage, VIN, and the output voltage, VO, to maintain a pseudo-fixed frequency over the input voltage range, hence it is called adaptive on-time control. The one-shot timer is reset and the high-side MOSFET is turned on again when the feedback voltage falls below the reference voltage. An internal ramp is added to reference voltage to simulate output ripple, eliminating the need for ESR induced output ripple from D-CAP2™ mode control.

PWM Frequency and Adaptive On-Time Control

TPS54628 uses an adaptive on-time control scheme and does not have a dedicated on board oscillator. The TPS54628 runs with a pseudo-constant frequency of 650 kHz by using the input voltage and output voltage to set the on-time one-shot timer. The on-time is inversely proportional to the input voltage and proportional to the output voltage; therefore, when the duty ratio is VOUT/VIN, the frequency is constant.

Auto-Skip Eco-Mode™ Control

The TPS54628 is designed with Auto-Skip Eco-mode™ to increase light load efficiency. As the output current decreases from heavy load condition, the inductor current is also reduced and eventually comes to point that its rippled valley touches zero level, which is the boundary between continuous conduction and discontinuous conduction modes. The rectifying MOSFET is turned off when its zero inductor current is detected. As the load current further decreases the converter run into discontinuous conduction mode. The on-time is kept almost the same as is was in the continuous conduction mode so that it takes longer time to discharge the output capacitor with smaller load current to the level of the reference voltage. The transition point to the light load operation $I_{OUT(LL)}$ current can be calculated in Equation 1

$$I_{OUT(LL)} = \frac{1}{2 \cdot L \cdot fsw} \cdot \frac{(V_{IN} - V_{OUT}) \cdot V_{OUT}}{V_{IN}} \tag{1}$$

Soft Start and Pre-Biased Soft Start

The soft start function is adjustable. When the EN pin becomes high, 6μA current begins charging the capacitor which is connected from the SS pin to GND. Smooth control of the output voltage is maintained during start up. The equation for the slow start time is shown in Equation 2. VFB voltage is 0.765 V and SS pin source current is 6 μA.

$$t_{SS}(ms) = \frac{C6(nF) \times V_{FB} \times 1.1}{I_{SS}(\mu A)} = \frac{C6(nF) \times 0.765 \times 1.1}{6} \tag{2}$$

The TPS54628 contains a unique circuit to prevent current from being pulled from the output during startup if the output is pre-biased. When the soft-start commands a voltage higher than the pre-bias level (internal soft start becomes greater than feedback voltage V_{FB}), the controller slowly activates synchronous rectification by starting the first low side FET gate driver pulses with a narrow on-time. It then increments that on-time on a cycle-by-cycle basis until it coincides with the time dictated by (1-D), where D is the duty cycle of the converter. This scheme prevents the initial sinking of the pre-bias output, and ensure that the out voltage (V_O) starts and ramps up smoothly into regulation and the control loop is given time to transition from pre-biased start-up to normal mode operation.

Copyright © 2013, Texas Instruments Incorporated

Output Discharge Control

TPS54628 discharges the output when EN is low, or the controller is turned off by the UVLO protection. The internal low-side MOSFET is not turned on for the output discharge operation to avoid the possibility of causing negative voltage at the output.

Current Protection

The output overcurrent protection (OCP) is implemented using a cycle-by-cycle valley detect control circuit. The switch current is monitored by measuring the low-side FET switch voltage between the SW pin and GND. This voltage is proportional to the switch current. To improve accuracy, the voltage sensing is temperature compensated.

During the on time of the high-side FET switch, the switch current increases at a linear rate determined by V_{IN}, V_{OUT}, the on-time and the output inductor value. During the on time of the low-side FET switch, this current decreases linearly. The average value of the switch current is the load current I_{OUT}. The TPS54628 constantly monitors the low-side FET switch voltage, which is proportional to the switch current, during the low-side on-time. If the measured voltage is above the voltage proportional to the current limit, an internal counter is incremented per each SW cycle and the converter maintains the low-side switch on until the measured voltage is below the voltage corresponding to the current limit at which time the switching cycle is terminated and a new switching cycle begins. In subsequent switching cycles, the on-time is set to a fixed value and the current is monitored in the same manner. If the over current condition exists for 7 consecutive switching cycles, the internal OCL threshold is set to a lower level, reducing the available output current. When a switching cycle occurs where the switch current is not above the lower OCL threshold, the counter is reset and the OCL limit is returned to the higher value.

There are some important considerations for this type of over-current protection. The peak current is the average load current plus one half of the peak-to-peak inductor current. The valley current is the average load current minus one half of the peak-to-peak inductor current. Since the valley current is used to detect the over-current threshold, the load current is higher than the over-current threshold. Also, when the current is being limited, the output voltage tends to fall. When the VFB voltage becomes lower than 65% of the target voltage, the UVP comparator detects it. If the under-voltage condition persists for 250 µs, the device will shut down and re-start in hiccup mode after 7 times the SS period. When the over current condition is removed, the output voltage will return to the regulated value. This protection is non-latching.

Over Voltage Protection

TPS54628 detects over and under voltage conditions by monitoring the feedback voltage (VFB). This function is enabled after approximately 1.7 x times the soft start time. When the feedback voltage becomes higher than 125% of the target voltage, the OVP comparator output goes high and both the high-side MOSFET driver and the low-side MOSFET driver turn off. This function is non-latch operation.

UVLO Protection

Undervoltage lock out protection (UVLO) monitors the voltage of the V_{REG5} pin. When the V_{REG5} voltage is lower than UVLO threshold voltage, the TPS54628 is shut off. This protection is non-latching.

Thermal Shutdown

TPS54628 monitors the temperature of itself. If the temperature exceeds the threshold value (typically 165°C), the device is shut off. This is non-latch protection.

Copyright © 2013, Texas Instruments Incorporated

TYPICAL CHARACTERISTICS

VIN = 12 V, T_A = 25°C (unless otherwise noted).

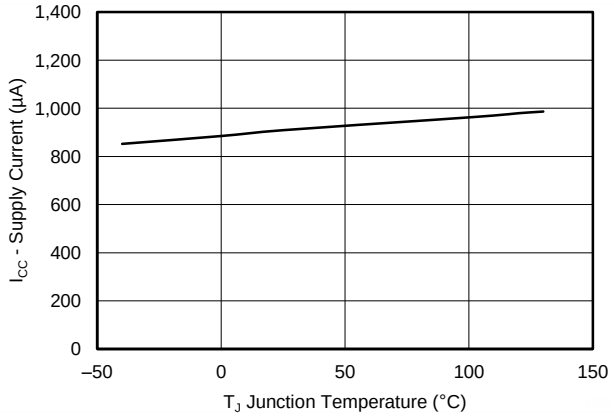

Figure 1. SUPPLY CURRENT vs JUNCTION TEMPERATURE

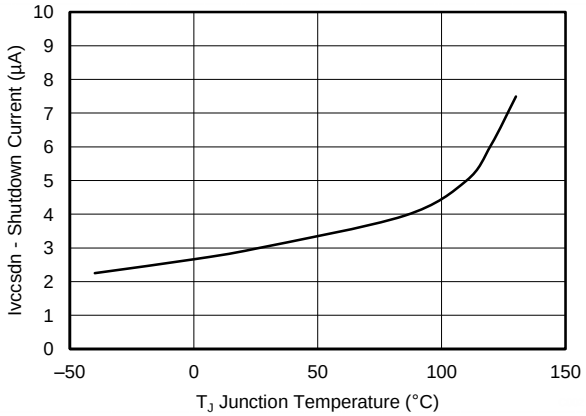

Figure 2. VIN SHUTDOWN CURRENT vs JUNCTION TEMPERATURE

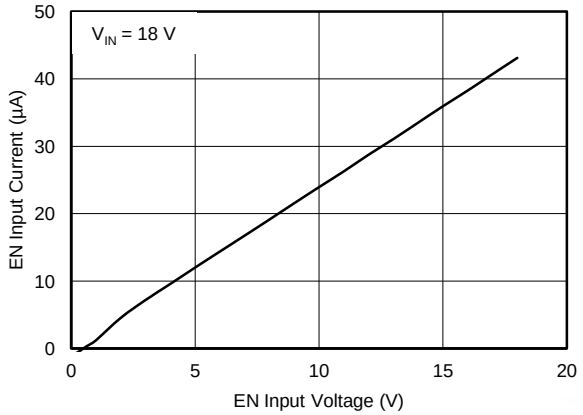

Figure 3. EN CURRENT vs EN VOLTAGE

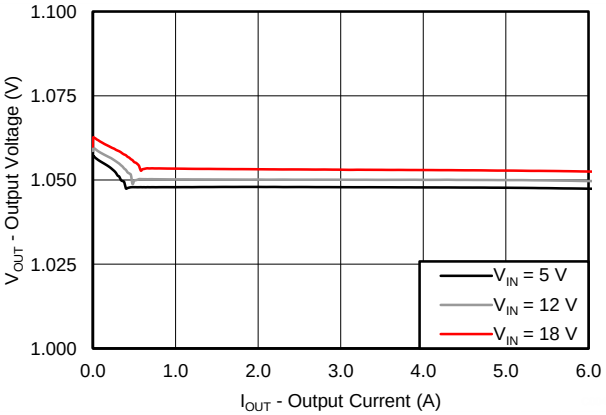

Figure 4. 1.05-V OUTPUT VOLTAGE vs OUTPUT CURRENT

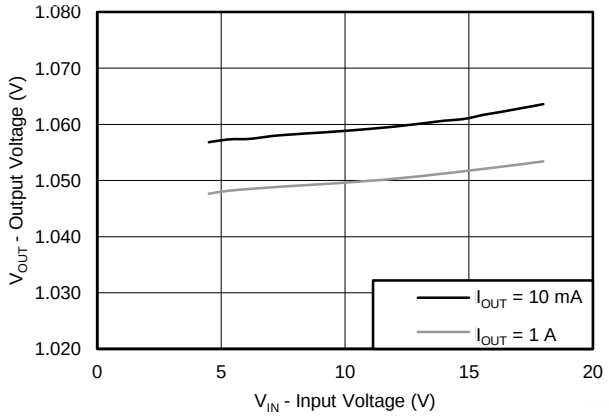

Figure 5. 1.05-V OUTPUT VOLTAGE vs INPUT VOLTAGE

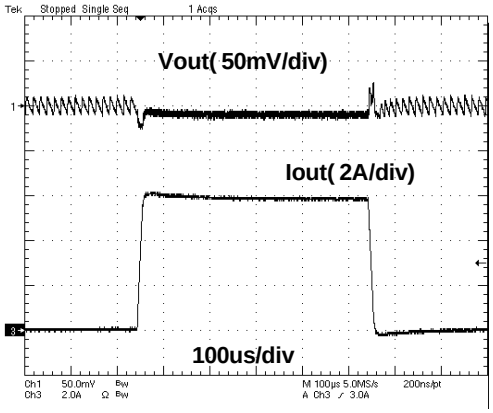

Figure 6. 1.05-V, LOAD TRANSIENT RESPONSE

TYPICAL CHARACTERISTICS (continued)

VIN = 12 V, T_A = 25°C (unless otherwise noted).

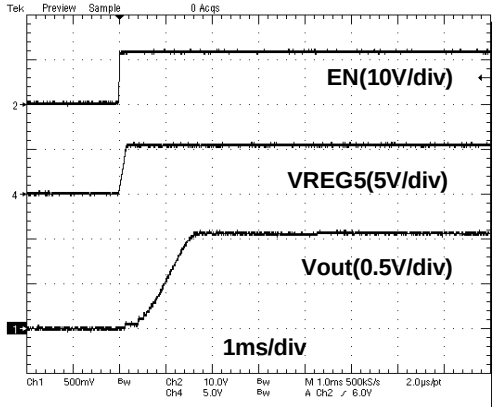

Figure 7. START-UP WAVE FORM

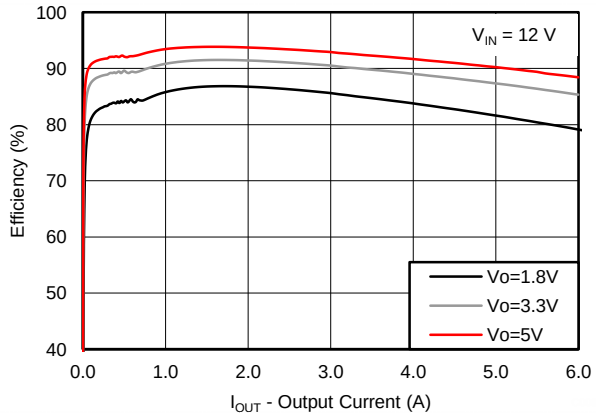

Figure 8. EFFICIENCY vs OUTPUT CURRENT

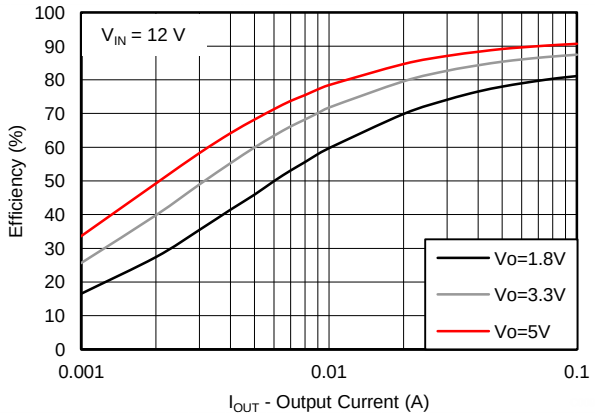

Figure 9. LIGHT LOAD EFFICIENCY vs OUTPUT CURRENT

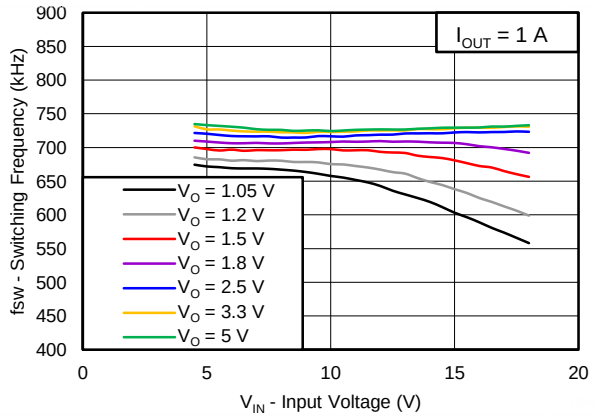

Figure 10. SWITCHING FREQUENCY vs INPUT VOLTAGE

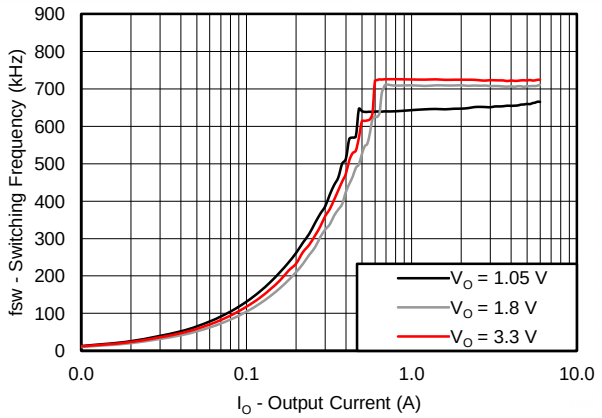

Figure 11. SWITCHING FREQUENCY vs OUTPUT CURRENT

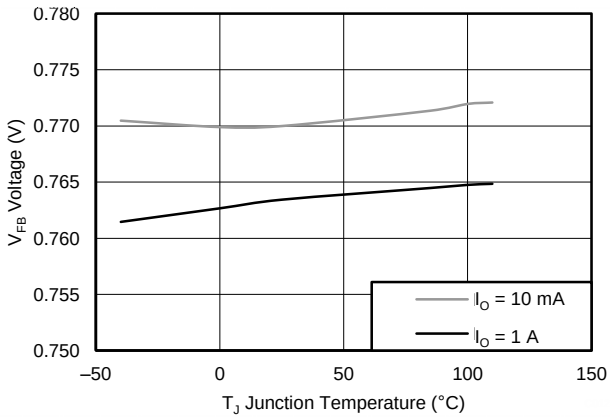

Figure 12. VFB VOLTAGE vs JUNCTION TEMPERATURE

Copyright © 2013, Texas Instruments Incorporated

TYPICAL CHARACTERISTICS (continued)

VIN = 12 V, T_A = 25°C (unless otherwise noted).

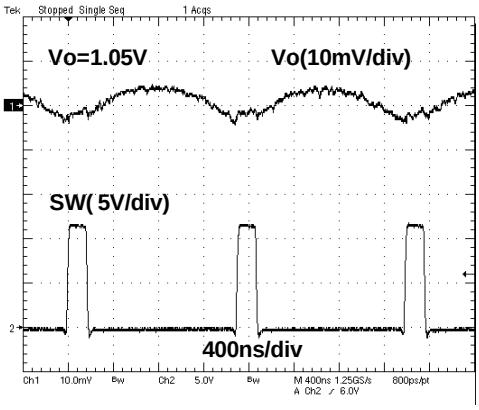

Figure 13. VOLTAGE RIPPLE AT OUTPUT (I_O = 6 A)

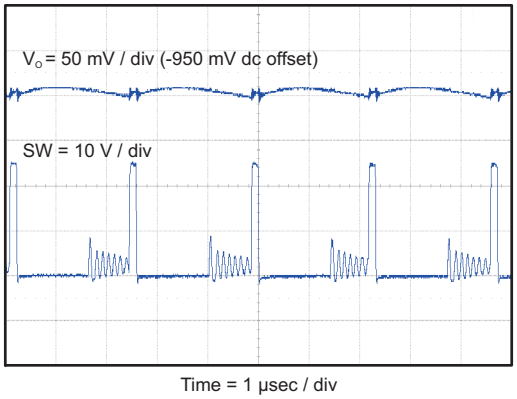

Figure 14. DCM VOLTAGE RIPPLE AT OUTPUT (I_O = 30 mA)

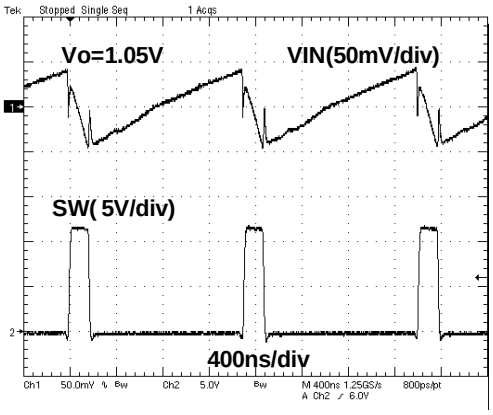

Figure 15. VOLTAGE RIPPLE AT INPUT (I_O = 6 A)

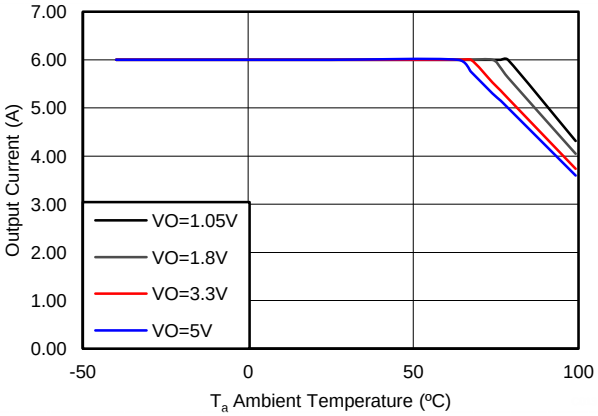

Figure 16. OUTPUT CURRENT vs AMBIENT TEMPERATURE

Copyright © 2013, Texas Instruments Incorporated

DESIGN GUIDE

Step-By-Step Design Procedure

To begin the design process, the user must know a few application parameters:

- Input voltage range
- Output voltage
- Output current
- Output voltage ripple
- Input voltage ripple

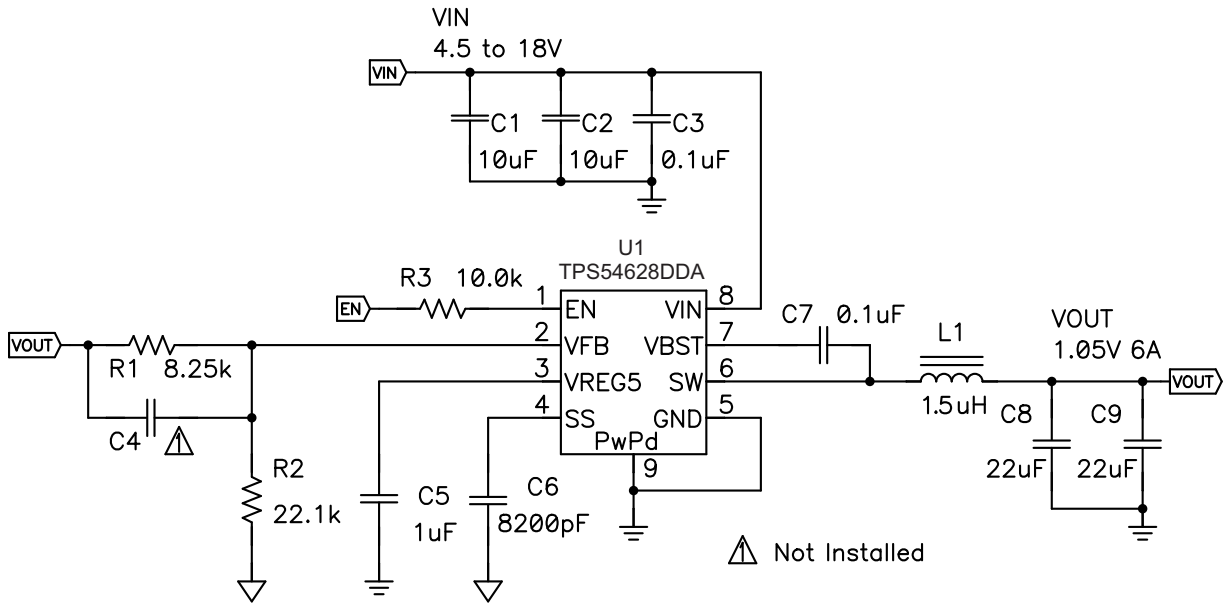

Figure 17. Shows the schematic diagram for this design example.

Output Voltage Resistors Selection

The output voltage is set with a resistor divider from the output node to the VFB pin. It is recommended to use 1% tolerance or better divider resistors. Start by using Equation 3 to calculate V_{OUT}.

To improve efficiency at light loads consider using larger value resistors, high resistance is more susceptible to noise, and the voltage errors from the VFB input current are more noticeable.

$$V_{OUT} = 0.765 \times \left(1 + \frac{R1}{R2}\right) \tag{3}$$

Output Filter Selection

The output filter used with the TPS54628 is an LC circuit. This LC filter has double pole at:

$$F_P = \frac{1}{2\pi\sqrt{L_{OUT} \times C_{OUT}}} \tag{4}$$

At low frequencies, the overall loop gain is set by the output set-point resistor divider network and the internal gain of the TPS54628. The low frequency phase is 180 degrees. At the output filter pole frequency, the gain rolls off at a –40 dB per decade rate and the phase drops rapidly. D-CAP2™ introduces a high frequency zero that reduces the gain roll off to –20 dB per decade and increases the phase to 90 degrees one decade above the zero frequency. The inductor and capacitor selected for the output filter must be selected so that the double pole of Equation 4 is located below the high frequency zero but close enough that the phase boost provided be the high frequency zero provides adequate phase margin for a stable circuit. To meet this requirement use the values recommended in Table 1

Copyright © 2013, Texas Instruments Incorporated

Table 1. Recommended Component Values

Output Voltage (V)	R1 (kΩ)	R2 (kΩ)	C4 (pF)(1)			L1 (µH)			C8 + C9 (µF)	
			MIN	TYP	MAX	MIN	TYP	MAX	MIN	MAX
1	6.81	22.1	5	150	220	1.0	1.5	4.7	22	68
1.05	8.25	22.1	5	150	220	1.0	1.5	4.7	22	68
1.2	12.7	22.1	5		100	1.0	1.5	4.7	22	68
1.5	21.5	22.1	5		68	1.0	1.5	4.7	22	68
1.8	30.1	22.1	5		22	1.2	1.5	4.7	22	68
2.5	49.9	22.1	5		22	1.5	2.2	4.7	22	68
3.3	73.2	22.1	2		22	1.8	2.2	4.7	22	68
5	124	22.1	2		22	2.2	3.3	4.7	22	68

(1) Optional

Since the DC gain is dependent on the output voltage, the required inductor value increases as the output voltage increases. Additional phase boost can be achieved by adding a feed forward capacitor (C4) in parallel with R1. The feed forward capacitor is most effective for output voltages at or above 1.8 V.

The inductor peak-to-peak ripple current, peak current and RMS current are calculated using Equation 5, Equation 6 and Equation 7. The inductor saturation current rating must be greater than the calculated peak current and the RMS or heating current rating must be greater than the calculated RMS current. Use 700 kHz for f_{SW}.

Use 650 kHz for f_{SW}. Make sure the chosen inductor is rated for the peak current of Equation 6 and the RMS current of Equation 7.

$$I_{IPP} = \frac{V_{OUT}}{V_{IN(max)}} \times \frac{V_{IN(max)} - V_{OUT}}{L_O \times f_{SW}} \tag{5}$$

$$I_{Ipeak} = I_O + \frac{I_{Ipp}}{2} \tag{6}$$

$$I_{Lo(RMS)} = \sqrt{I_O^2 + \frac{1}{12} I_{IPP}^2} \tag{7}$$

For this design example, the calculated peak current is 6.51 A and the calculated RMS current is 6.01 A. The inductor used is a TDK SPM6530-1R5M100 with a peak current rating of 11.6 A and an RMS current rating of 11 A.

The capacitor value and ESR determines the amount of output voltage ripple. The TPS54628 is intended for use with ceramic or other low ESR capacitors. Recommended values range from 22µF to 68µF. Use Equation 8 to determine the required RMS current rating for the output capacitor.

$$I_{Co(RMS)} = \frac{V_{OUT} \times (V_{IN} - V_{OUT})}{\sqrt{12} \times V_{IN} \times L_O \times f_{SW}} \tag{8}$$

For this design two TDK C3216X5R0J226M 22µF output capacitors are used. The typical ESR is 2 mΩ each. The calculated RMS current is 0.284 A and each output capacitor is rated for 4A.

Input Capacitor Selection

The TPS54628 requires an input decoupling capacitor and a bulk capacitor is needed depending on the application. A ceramic capacitor over 10 µF is recommended for the decoupling capacitor. An additional 0.1 µF capacitor (C3) from pin 8 to ground is optional to provide additional high frequency filtering. The capacitor voltage rating needs to be greater than the maximum input voltage.

Bootstrap Capacitor Selection

A 0.1 µF. ceramic capacitor must be connected between the VBST to SW pin for proper operation. It is recommended to use a ceramic capacitor.

Copyright © 2013, Texas Instruments Incorporated

VREG5 Capacitor Selection

A 1-µF. ceramic capacitor must be connected between the VREG5 to GND pin for proper operation. It is recommended to use a ceramic capacitor.

THERMAL INFORMATION

This 8-pin DDA package incorporates an exposed thermal pad that is designed to be directly to an external heartsick. The thermal pad must be soldered directly to the printed board (PCB). After soldering, the PCB can be used as a heartsick. In addition, through the use of thermal vias, the thermal pad can be attached directly to the appropriate copper plane shown in the electrical schematic for the device, or alternatively, can be attached to a special heartsick structure designed into the PCB. This design optimizes the heat transfer from the integrated circuit (IC).

For additional information on the exposed thermal pad and how to use the advantage of its heat dissipating abilities, see the Technical Brief, PowerPAD™ Thermally Enhanced Package, Texas Instruments Literature No. SLMA002 and Application Brief, PowerPAD™ Made Easy, Texas Instruments Literature No. SLMA004.

The exposed thermal pad dimensions for this package are shown in the following illustration.

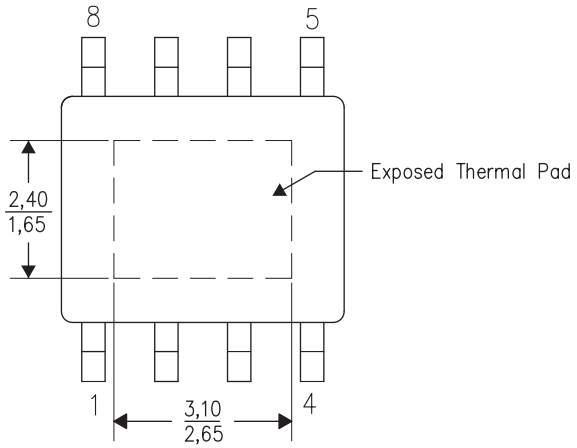

Figure 18. Thermal Pad Dimensions

Copyright © 2013, Texas Instruments Incorporated

LAYOUT CONSIDERATIONS

1. The TPS54628 can supply large load currents up to 6 A, so heat dissipation may be a concern. The top side area adjacent to the TPS54628 should be filled with ground as much as possible to dissipate heat.
2. The bottom side area directly below the IC should a dedicated ground area. It should be directly connected to the thermal pad of the device using vias as shown. The ground area should be as large as practical. Additional internal layers can be dedicated as ground planes and connected to the vias as well.
3. Keep the input switching current loop as small as possible.
4. Keep the SW node as physically small and short as possible to minimize parasitic capacitance and inductance and to minimize radiated emissions. Kelvin connections should be brought from the output to the feedback pin of the device.
5. Keep analog and non-switching components away from switching components.
6. Make a single point connection from the signal ground to power ground.
7. Do not allow switching current to flow under the device.
8. Keep the pattern lines for VIN and PGND broad.
9. Exposed pad of device must be connected to PGND with solder.
10. VREG5 capacitor should be placed near the device, and connected PGND.
11. Output capacitor should be connected to a broad pattern of the PGND.
12. Voltage feedback loop should be as short as possible, and preferably with ground shield.
13. Lower resistor of the voltage divider which is connected to the VFB pin should be tied to SGND.
14. Providing sufficient via is preferable for VIN, SW and PGND connection.
15. PCB pattern for VIN, SW, and PGND should be as broad as possible.
16. VIN Capacitor should be placed as near as possible to the device.

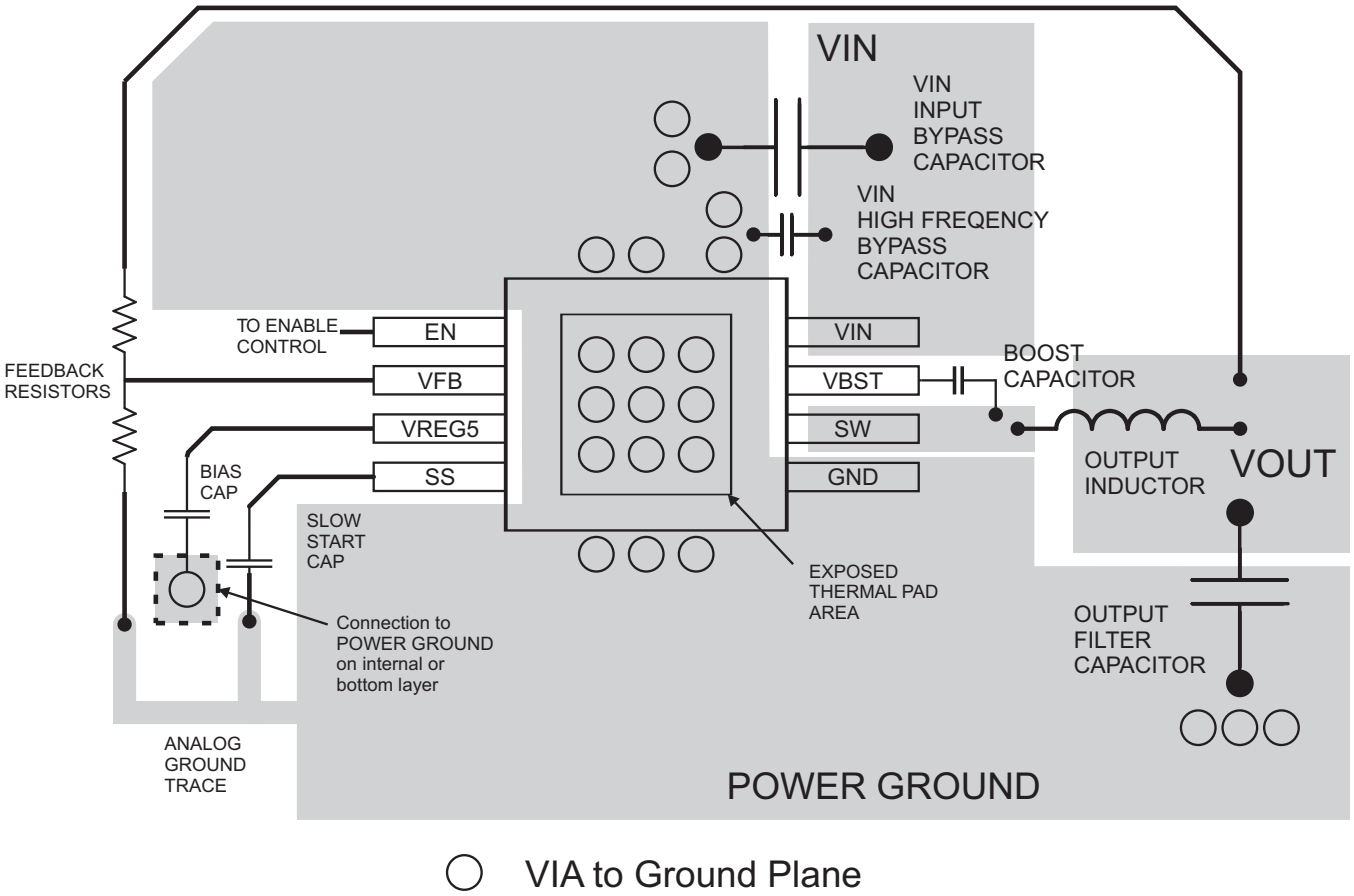

Figure 19. PCB Layout

PACKAGING INFORMATION

Orderable Device	Status (1)	Package Type	Package Drawing	Pins	Package Qty	Eco Plan (2)	Lead/Ball Finish (6)	MSL Peak Temp (3)	Op Temp (°C)	Device Marking (4/5)	Samples
TPS54628DDA	ACTIVE	SO PowerPAD	DDA	8	75	Green (RoHS & no Sb/Br)	CU NIPDAU | CU SN	Level-2-260C-1 YEAR	-40 to 125	54628	Samples
TPS54628DDAR	ACTIVE	SO PowerPAD	DDA	8	2500	Green (RoHS & no Sb/Br)	CU NIPDAU | CU SN	Level-2-260C-1 YEAR	-40 to 125	54628	Samples

(1) The marketing status values are defined as follows:
ACTIVE: Product device recommended for new designs.
LIFEBUY: TI has announced that the device will be discontinued, and a lifetime-buy period is in effect.
NRND: Not recommended for new designs. Device is in production to support existing customers, but TI does not recommend using this part in a new design.
PREVIEW: Device has been announced but is not in production. Samples may or may not be available.
OBSOLETE: TI has discontinued the production of the device.

(2) Eco Plan - The planned eco-friendly classification: Pb-Free (RoHS), Pb-Free (RoHS Exempt), or Green (RoHS & no Sb/Br) - please check http://www.ti.com/productcontent for the latest availability information and additional product content details.
TBD: The Pb-Free/Green conversion plan has not been defined.
Pb-Free (RoHS): TI's terms "Lead-Free" or "Pb-Free" mean semiconductor products that are compatible with the current RoHS requirements for all 6 substances, including the requirement that lead not exceed 0.1% by weight in homogeneous materials. Where designed to be soldered at high temperatures, TI Pb-Free products are suitable for use in specified lead-free processes.
Pb-Free (RoHS Exempt): This component has a RoHS exemption for either 1) lead-based flip-chip solder bumps used between the die and package, or 2) lead-based die adhesive used between the die and leadframe. The component is otherwise considered Pb-Free (RoHS compatible) as defined above.
Green (RoHS & no Sb/Br): TI defines "Green" to mean Pb-Free (RoHS compatible), and free of Bromine (Br) and Antimony (Sb) based flame retardants (Br or Sb do not exceed 0.1% by weight in homogeneous material)

(3) MSL, Peak Temp. - The Moisture Sensitivity Level rating according to the JEDEC industry standard classifications, and peak solder temperature.

(4) There may be additional marking, which relates to the logo, the lot trace code information, or the environmental category on the device.

(5) Multiple Device Markings will be inside parentheses. Only one Device Marking contained in parentheses and separated by a "~" will appear on a device. If a line is indented then it is a continuation of the previous line and the two combined represent the entire Device Marking for that device.

(6) Lead/Ball Finish - Orderable Devices may have multiple material finish options. Finish options are separated by a vertical ruled line. Lead/Ball Finish values may wrap to two lines if the finish value exceeds the maximum column width.

Important Information and Disclaimer: The information provided on this page represents TI's knowledge and belief as of the date that it is provided. TI bases its knowledge and belief on information provided by third parties, and makes no representation or warranty as to the accuracy of such information. Efforts are underway to better integrate information from third parties. TI has taken and continues to take reasonable steps to provide representative and accurate information but may not have conducted destructive testing or chemical analysis on incoming materials and chemicals. TI and TI suppliers consider certain information to be proprietary, and thus CAS numbers and other limited information may not be available for release.

In no event shall TI's liability arising out of such information exceed the total purchase price of the TI part(s) at issue in this document sold by TI to Customer on an annual basis.

DDA 8 PowerPAD™ SOIC - 1.7 mm max height

PLASTIC SMALL OUTLINE

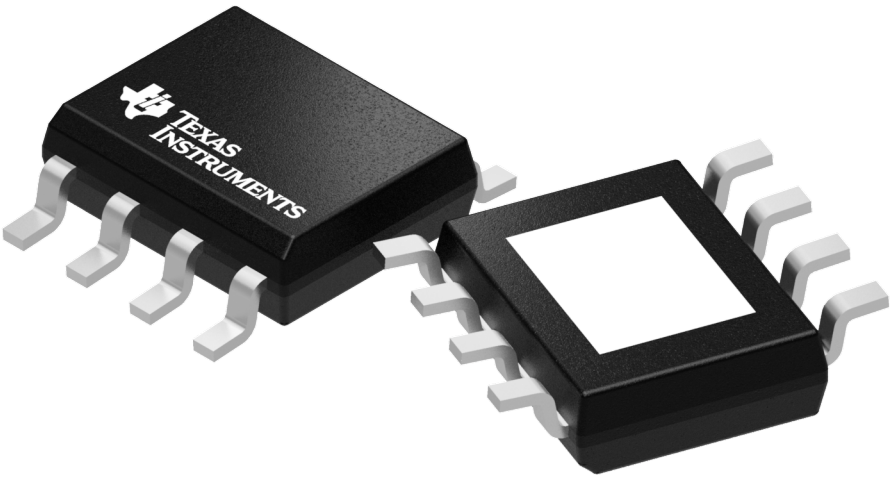

Images above are just a representation of the package family, actual package may vary.
Refer to the product data sheet for package details.

DDA (R-PDSO-G8) PowerPAD™ PLASTIC SMALL-OUTLINE

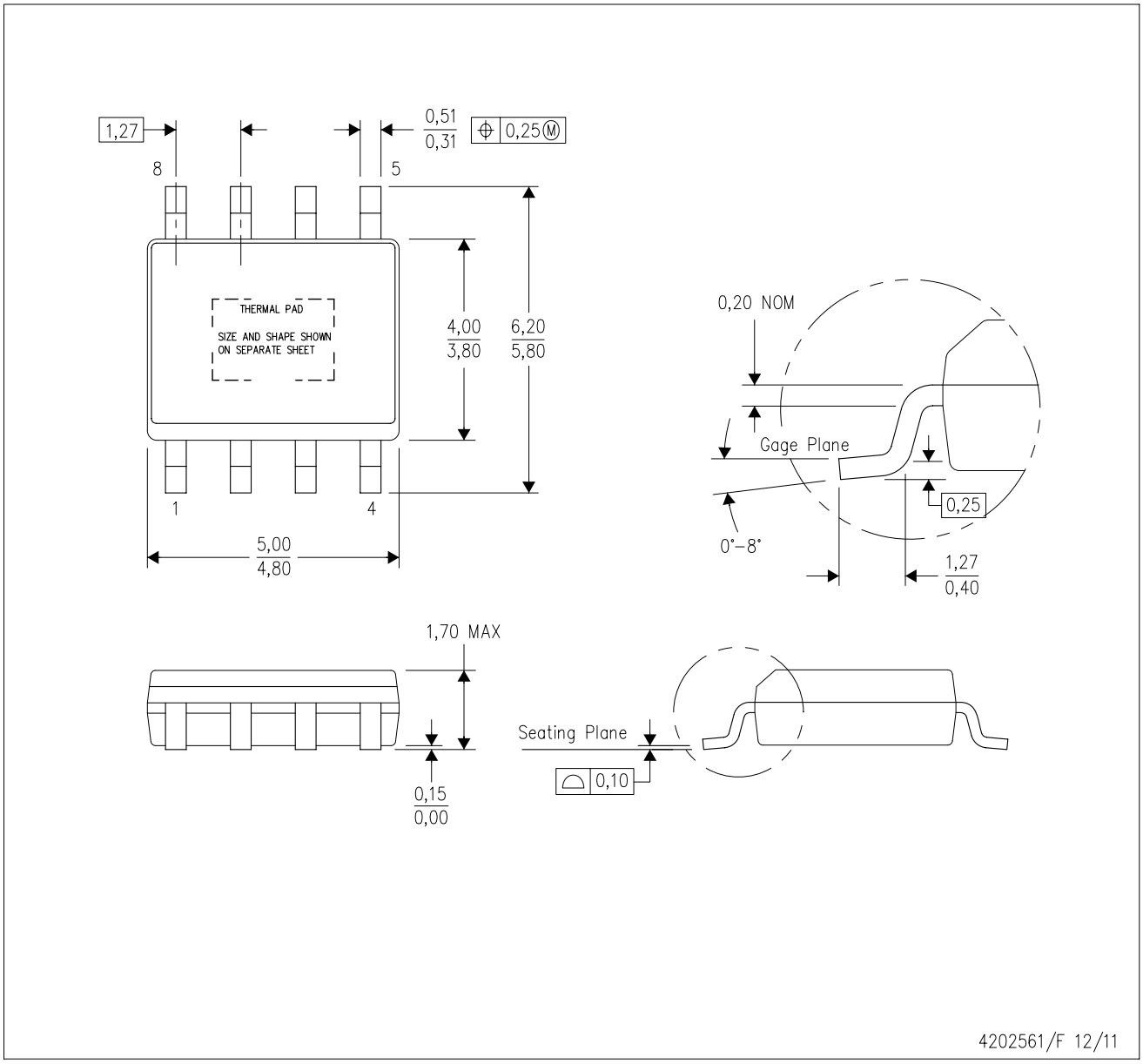

NOTES:
A. All linear dimensions are in millimeters. Dimensioning and tolerancing per ASME Y14.5–1994.
B. This drawing is subject to change without notice.
C. Body dimensions do not include mold flash or protrusion not to exceed 0,15.
D. This package is designed to be soldered to a thermal pad on the board. Refer to Technical Brief, PowerPad Thermally Enhanced Package, Texas Instruments Literature No. SLMA002 for information regarding recommended board layout. This document is available at www.ti.com <http://www.ti.com>.
E. See the additional figure in the Product Data Sheet for details regarding the exposed thermal pad features and dimensions.
F. This package complies to JEDEC MS-012 variation BA

PowerPAD is a trademark of Texas Instruments.

DDA (R-PDSO-G8) PowerPAD™ PLASTIC SMALL OUTLINE

THERMAL INFORMATION

This PowerPAD™ package incorporates an exposed thermal pad that is designed to be attached to a printed circuit board (PCB). The thermal pad must be soldered directly to the PCB. After soldering, the PCB can be used as a heatsink. In addition, through the use of thermal vias, the thermal pad can be attached directly to the appropriate copper plane shown in the electrical schematic for the device, or alternatively, can be attached to a special heatsink structure designed into the PCB. This design optimizes the heat transfer from the integrated circuit (IC).

For additional information on the PowerPAD package and how to take advantage of its heat dissipating abilities, refer to Technical Brief, PowerPAD Thermally Enhanced Package, Texas Instruments Literature No. SLMA002 and Application Brief, PowerPAD Made Easy, Texas Instruments Literature No. SLMA004. Both documents are available at www.ti.com.

The exposed thermal pad dimensions for this package are shown in the following illustration.

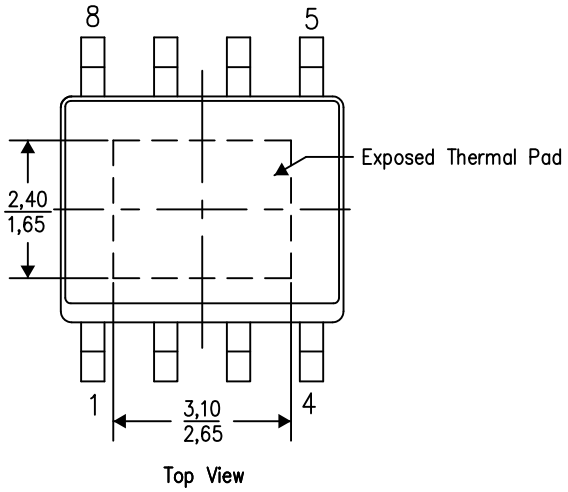

Exposed Thermal Pad Dimensions

4206322-6/L 05/12

NOTE: A. All linear dimensions are in millimeters

PowerPAD is a trademark of Texas Instruments

DDA (R–PDSO–G8) PowerPAD™ PLASTIC SMALL OUTLINE

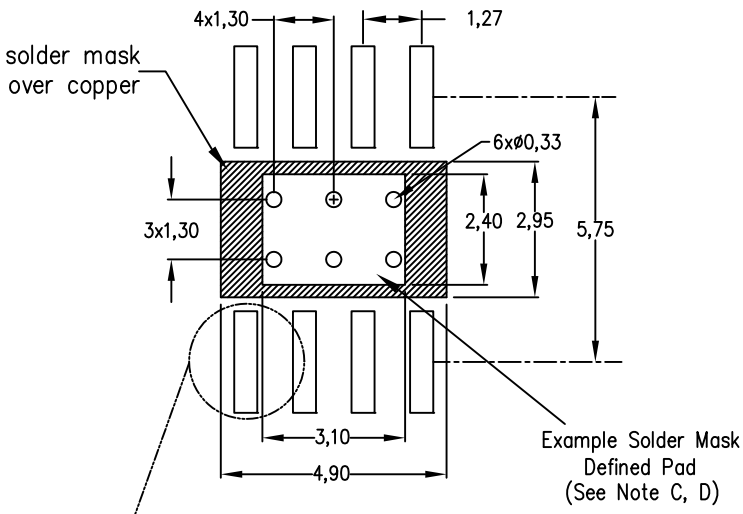

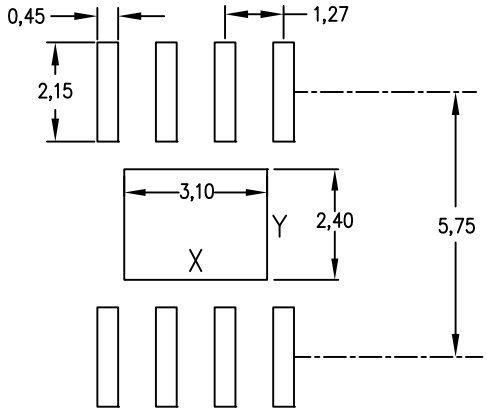

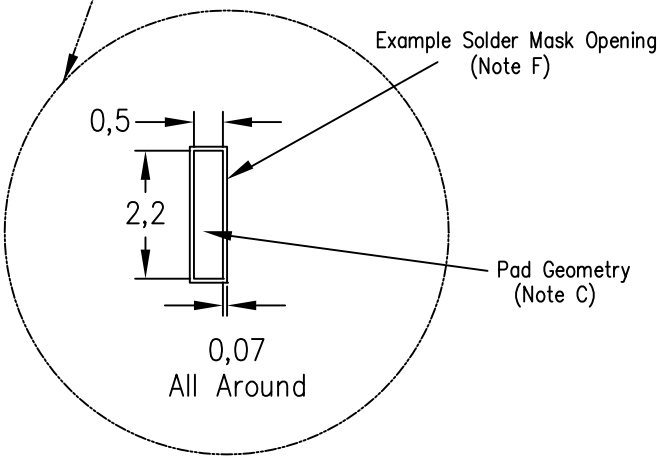

Center Power Pad Solder Stencil Opening		
Stencil Thickness	X	Y
0.1mm	3.3	2.6
0.127mm	3.1	2.4
0.152mm	2.9	2.2
0.178mm	2.8	2.1

4208951–6/D 04/12

NOTES:
A. All linear dimensions are in millimeters.
B. This drawing is subject to change without notice.
C. Publication IPC–7351 is recommended for alternate designs.
D. This package is designed to be soldered to a thermal pad on the board. Refer to Technical Brief, PowerPad Thermally Enhanced Package, Texas Instruments Literature No. SLMA002, SLMA004, and also the Product Data Sheets for specific thermal information, via requirements, and recommended board layout. These documents are available at www.ti.com <http://www.ti.com>. Publication IPC–7351 is recommended for alternate designs.
E. Laser cutting apertures with trapezoidal walls and also rounding corners will offer better paste release. Customers should contact their board assembly site for stencil design recommendations. Example stencil design based on a 50% volumetric metal load solder paste. Refer to IPC–7525 for other stencil recommendations.
F. Customers should contact their board fabrication site for solder mask tolerances between and around signal pads.

PowerPAD is a trademark of Texas Instruments.

重要声明和免责声明

TI 均以“原样”提供技术性及可靠性数据（包括数据表）、设计资源（包括参考设计）、应用或其他设计建议、网络工具、安全信息和其他资源，不保证其中不含任何瑕疵，且不做任何明示或暗示的担保，包括但不限于对适销性、适合某特定用途或不侵犯任何第三方知识产权的暗示担保。

所述资源可供专业开发人员应用TI 产品进行设计使用。您将对以下行为独自承担全部责任：(1) 针对您的应用选择合适的TI 产品；(2) 设计、验证并测试您的应用；(3) 确保您的应用满足相应标准以及任何其他安全、安保或其他要求。所述资源如有变更，恕不另行通知。TI 对您使用所述资源的授权仅限于开发资源所涉及TI 产品的相关应用。除此之外不得复制或展示所述资源，也不提供其它TI或任何第三方的知识产权授权许可。如因使用所述资源而产生任何索赔、赔偿、成本、损失及债务等，TI对此概不负责，并且您须赔偿由此对TI 及其代表造成的损害。

TI 所提供产品均受TI 的销售条款 (http://www.ti.com.cn/zh-cn/legal/termsofsale.html) 以及ti.com.cn上或随附TI产品提供的其他可适用条款的约束。TI提供所述资源并不扩展或以其他方式更改TI 针对TI 产品所发布的可适用的担保范围或担保免责声明。

邮寄地址：上海市浦东新区世纪大道 1568 号中建大厦 32 楼，邮政编码：200122
Copyright © 2019 德州仪器半导体技术（上海）有限公司