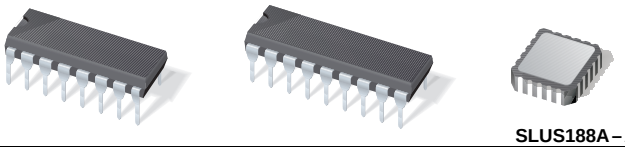

Power Supply Supervisory Circuit

FEATURES

- **Includes Over-Voltage, Under-Voltage, and Current Sensing Circuits**
- **Internal 1% Accurate Reference**
- **Programmable Time Delays**
- **SCR "Crowbar" Drive of 300 mA**
- **Remote Activation Capability**
- **Optional Over-Voltage Latch**
- **Uncommitted Comparator Inputs for Low Voltage Sensing (UC1544 Series Only)**

DESCRIPTION

The monolithic integrated circuits contain all the functions necessary to monitor and control the output of a sophisticated power supply system. Over-voltage (O.V.) sensing with provision to trigger an external SCR "crowbar" shutdown; an undervoltage (U.V.) circuit which can be used to monitor either the output or to sample the input line voltage; and a third op amp/comparator usable for current sensing (C.L.) are all included in this device, together with an independent, accurate reference generator.

Both over- and under-voltage sensing circuits can be externally programmed for minimum time duration of fault before triggering. All functions contain open collector outputs which can be used independently or wire-or'ed together, and although the SCR trigger is directly connected only to the over-voltage sensing circuit, it may be optionally activated by any of the other outputs, or from an external signal. The O.V. circuit also includes an optional latch and external reset capability.

The UC1544/2544/3544 devices have the added versatility of completely uncommitted inputs to the voltage sensing comparators so that levels less than 2.5 V may be monitored by dividing down the internal reference voltage. The current sense circuit may be used with external compensation as a linear amplifier or as a highgain comparator. Although nominally set for zero input offset, a fixed threshold may be added with an external resistor. Instead of current limiting, this circuit may also be used as an additional voltage monitor.

The reference generator circuit is internally trimmed to eliminate the need for external potentiometers and the entire circuit may be powered directly from either the output being monitored or from a separate bias voltage.

BLOCK DIAGRAM

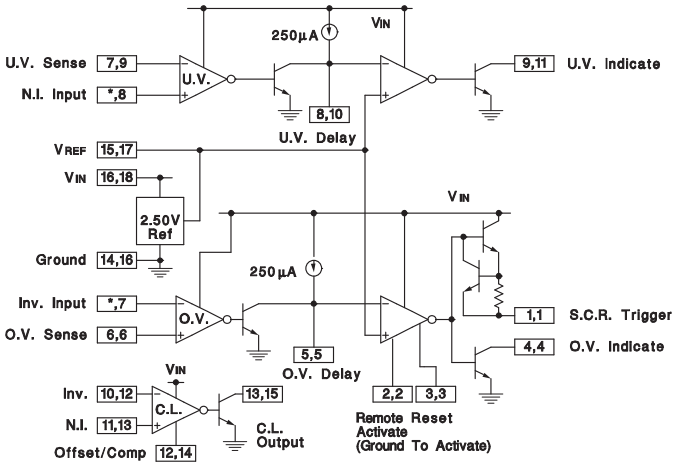

NOTE:

For each terminal, first number refers to 1543 series, second to 1544 series.
*On 1543 series, this function is internally connected to VREF.

Please be aware that an important notice concerning availability, standard warranty, and use in critical applications of Texas Instruments semiconductor products and disclaimers thereto appears at the end of this data sheet.

PRODUCTION DATA information is current as of publication date. Products conform to specifications per the terms of the Texas Instruments standard warranty. Production processing does not necessarily include testing of all parameters.

Copyright © 1997–2007, Texas Instruments Incorporated

Connection Diagrams

DIL-16, SOIC-16 (TOP VIEW)
J or N, DW Package
(Also W Package for the UC1543 Only)
UC 1543
UC 2543
UC 3543

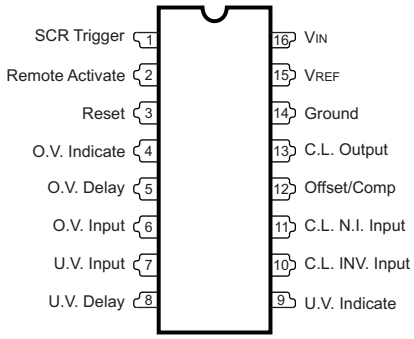

PLCC-20, LCC-20
(TOP VIEW)
Q or L Package

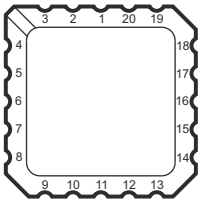

PACKAGE PIN FUNCTION	
FUNCTION	PIN
N/C	1
SCR Trigger	2
Remote Activate	3
Reset	4
O.V. Indicate	5
N/C	6
O.V. Delay	7
O.V. Input	8
N/C	9
N/C	10
U.V. Input	11
U.V. Delay	12
U.V. Indicate	13
C.L. INV. Input	14
C.L. N.I. Input	15
Offset/Comp	16
C.L. Output	17
Ground	18
VREF	19
VIN	20

DIL-18, SOIC-18 (TOP VIEW)
J or N, DW Package
UC 1544
UC 2544
UC 3544

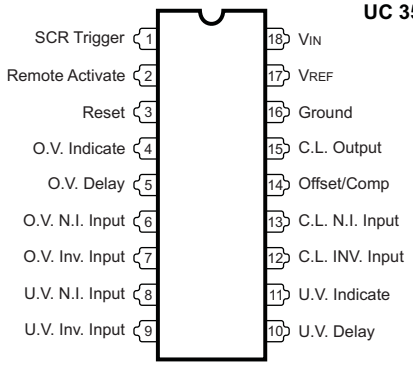

PLCC-20, LCC-20
(TOP VIEW)
Q or L Package

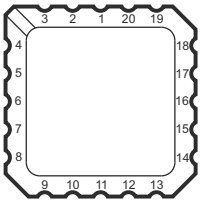

PACKAGE PIN FUNCTION	
FUNCTION	PIN
N/C	1
SCR Trigger	2
Remote Activate	3
Reset	4
O.V. Indicate	5
N/C	6
O.V. Delay	7
O.V. N.I. Input	8
O.V. INV. Input	9
U.V. N.I. Input	10
U.V. INV. Input	11
U.V. Delay	12
U.V. Indicate	13
C.L. INV. Input	14
C.L. N.I. Input	15
Offset/Comp	16
C.L. Output	17
Ground	18
VREF	19
VIN	20

ABSOLUTE MAXIMUM RATINGS(1)

over operating free-air temperature range (unless otherwise noted)

			VALUE	UNIT
V_{IN}	Input supply voltage		40	V
	Sense inputs, voltage range		0 to VIN	
	SCR trigger current (2)		-600	mA
	Indicator output voltage		40	V
	Indicator output sink current		50	mA
	Power dissipation (package limitation)		1000	mW
T_J	Operating temperature range	UC1543, UC1544	-55 to 125	°C
		UC2543, UC2544	-25 to 85	
		UC3543, UC3544	0 to 70	
T_{stg}	Storage temperature range		-65 to 150	

(1) Currents are positive-into, negative-out of the specified terminal.
(2) At higher input voltages, a dissipation limiting resistor, RG, is required.

ELECTRICAL CHARACTERISTICS

Unless otherwise stated, these specifications apply for T_A = -55°C to 125°C for theUC1543 and UC1544; -25°C to 85°C for the UC2543 and UC2544; and 0°C to 70°C for the UC3543 and UC3544. Electrical tests are performed with V_{IN} = 10 V and 2-kΩ pull-up resistors on all indicator outputs. All electrical specifications for the UC1544, UC2544, and UC3544 devices are tested with the inverting over-voltage input and the non-inverting under-voltage input externallyconnected to the 2.5 V reference. $T_A = T_J$.

PARAMETER		TEST CONDITIONS	UC1543/UC1544/UC2543/ UC2544			UC3543/UC3544			UNIT
			MIN	TYP	MAX	MIN	TYP	MAX	
V_{IN}	Input voltage range	T_J = 25°C to T_{MAX}	4.5		40	4.5		40	V
		T_{MIN} to T_{MAX}	4.7		40	4.7		40	
I_{CC}	Supply current	V_{IN} = 40 V, output open, T_J = 25°C		7	10		7	10	mA
		$T_{MIN} \leq T_J \leq T_{MAX}$			15			15	
Reference Section									
V_{OUT}	Output voltage	T_J = 25°C	2.48	2.5	2.52	2.45	2.50	2.55	V
		Over temperature range	2.45		2.55	2.40		2.60	
	Line regulation	V_{IN} = 5 to 30 V		1	5		1	5	mV
	Load regulation	I_{REF} = 0 to 10 mA		1	10		1	10	
	Short circuit current	V_{REF} = 0	-10	-20	-40	-12	-20	-40	mA
	Temperature stability			50			50		ppm/°C
SCR Trigger Section									
	Peak output current	V_{IN} = 5V, RG = 0, VO = 0	-100	-300	-600	-100	-300	-600	mA
	Peak output voltage	V_{IN} = 15 V, I_O = -100 mA	12	13		12	13		V
	Output OFF voltage	V_{IN} = 40 V		0	0.1		0	0.1	
	Remote activate current	R/A Pin = GND		-0.4	-0.8		-0.4	-0.8	mA
	Remote activate voltage	R/A Pin Open		2	6		2	6	V
	Reset current	Reset = GND, R/A = GND		-0.4	-0.8		-0.4	-0.8	mA
	Reset voltage	Reset open, R/A = GND		2	6		2	6	V
	Output current rise time	R_L = 50, T_J = 25°C, C_D = 0		400			400		mA/µs
	Prop. delay from R/A	R_L = 50, T_J = 25°C, C_D = 0		300			300		ns
	Prop. delay from O/V input	R_L = 50, T_J = 25°C, C_D = 0		500			500		
Comparator Section									
	Input threshold (Input voltage rising on O.V. and falling on U.V.)	T_J = 25°C	2.45	2.50	2.55	2.40	2.50	2.60	V
		Over temperature range	2.40		2.60	2.35		2.65	
	Input hysteresis			25			25		mV
	Input bias current	Sense input = 0 V		-0.3	-1.0		-0.3	-1.0	µA
	Delay saturation			0.2	0.5		0.2	0.5	V
	Delay high level			6	7		6	7	
	Delay charging current	V_O = 0	-200	-250	-300	-200	-250	-300	µA
	Indicate saturation	I_L = 10 mA		0.2	0.5		0.2	0.5	V
	Indicate leakage	V_{IND} = 40 V		0.01	1.0		0.01	1.0	µA
	Propagation delay	Input over drive = 200 mV, T_J = 25°C, C_D = 0		400			400		ns
		Input over drive = 200 mV, T_J = 25°C, C_D = 1 µF		10			10		ms

ELECTRICAL CHARACTERISTICS (continued)

Unless otherwise stated, these specifications apply for T_A = -55°C to 125°C for theUC1543 and UC1544; -25°C to 85°C for the UC2543 and UC2544; and 0°C to 70°C for the UC3543 and UC3544. Electrical tests are performed with V_{IN} = 10 V and 2-kΩ pull-up resistors on all indicator outputs. All electrical specifications for the UC1544, UC2544, and UC3544 devices are tested with the inverting over-voltage input and the non-inverting under-voltage input externallyconnected to the 2.5 V reference. $T_A = T_J$.

Current Limit Section									
	Input voltage range		0		VIN -3V	0		VIN -3V	V
	Input Bias Current	Offset pin open, V_{CM} = 0		-0.3	-1.0		-0.3	-1.0	µA
	Input offset voltage	Offset pin open, V_{CM} = 0		0	10		0	10	mV
		10k from offset pin to GND	80	100	120	80	100	120	
	CMRR	$0 \le V_{CM} \le 12$ V, V_{IN} = 15 V	60	70		60	70		dB
	AVOL	Offset pin open, V_{CM} = 0 V, R_L = 10 kΩ to 15 kΩ, V_{OUT} = 1 to 6 V	72	80		72	80		
	Output saturation	I_L = 10 mA		0.2	0.5		0.2	0.5	V
	Output leakage	V_{IND} = 40 V		0.01	1.0		0.01	1.0	µA
	Small signal bandwidth	A_V = 0dB, T_J = 25°C		5			5		MHz
	Propagation delay	$V_{OVERDRIVE}$ = 100 mV, T_J = 25°C		200			200		ns

TYPICAL CHARACTERISTICS

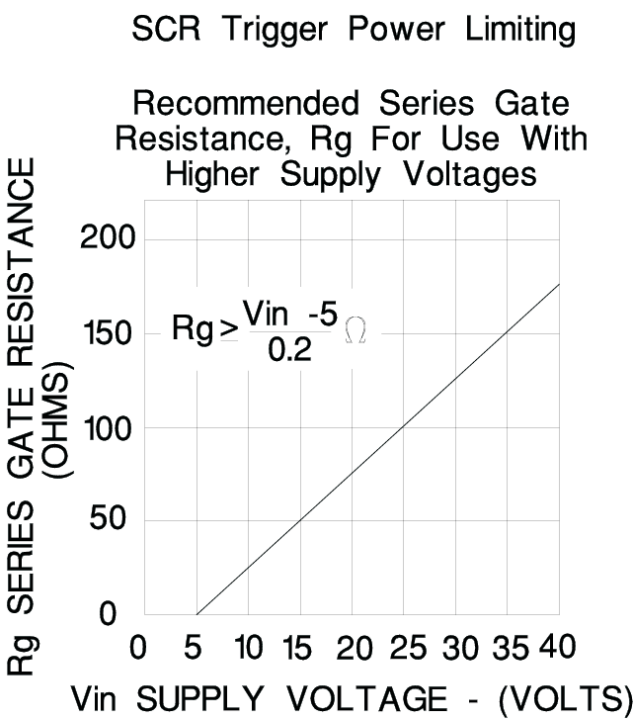

Figure 1.

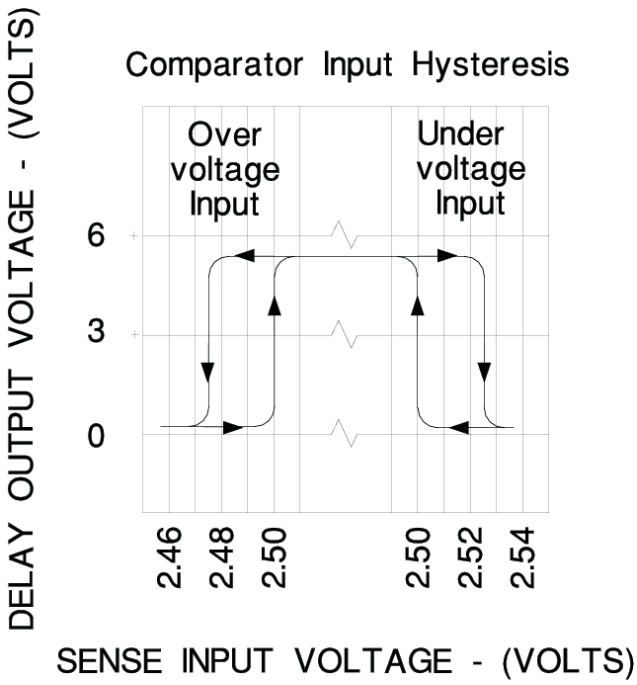

Figure 2.

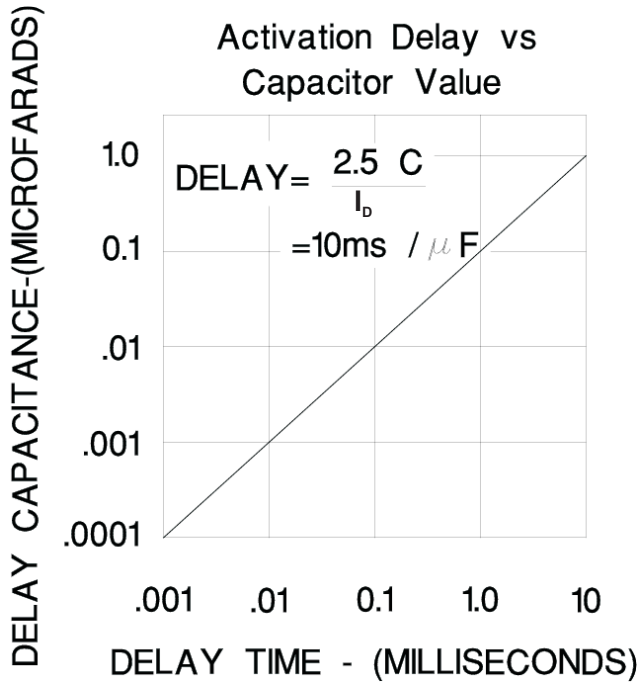

Figure 3.

Current Limit Input Threshold

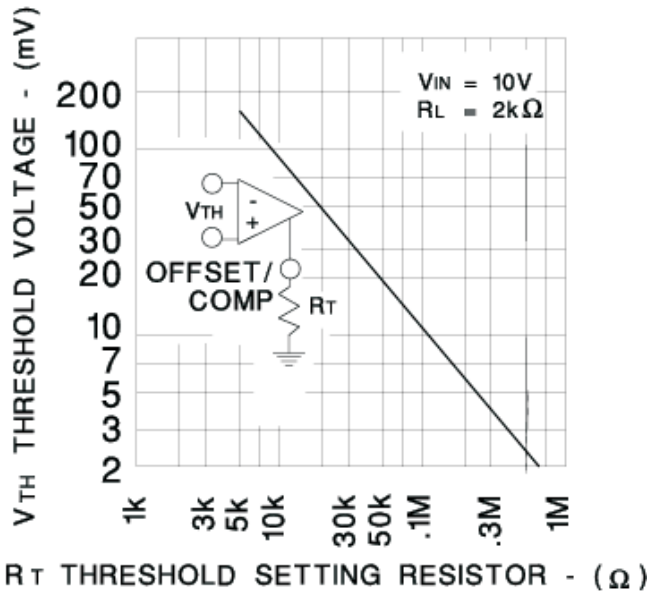

Figure 4.

Current Limit Amplifier Gain

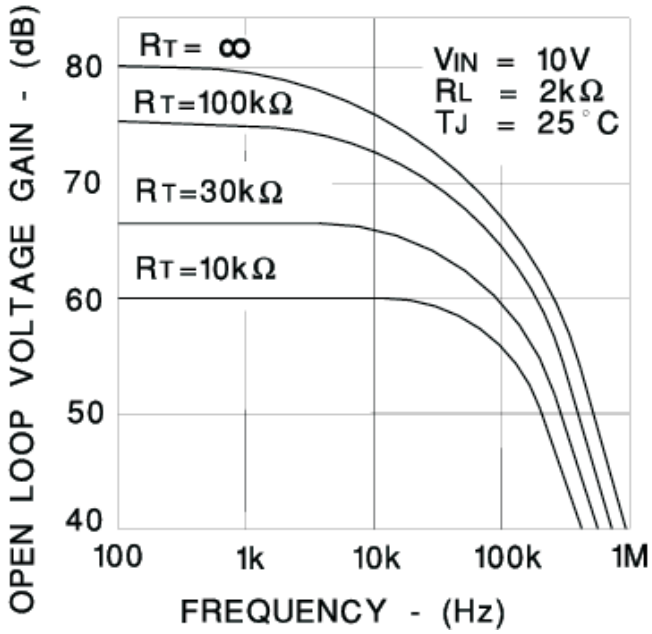

Figure 5.

Current Limit Amplifier Frequency Response

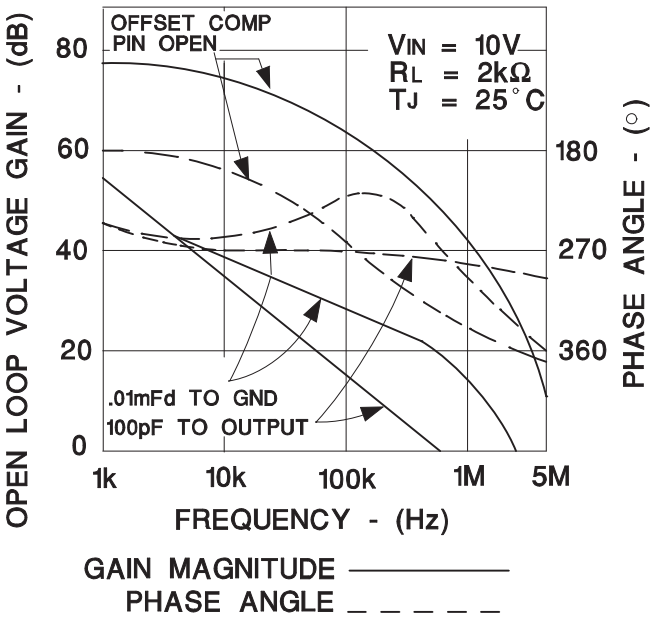

Figure 6.

APPLICATION INFORMATION

The values for the external components are determined as follows:

Current limit input threshold, $V_{TH} = \frac{1000}{R1}$

C_S is determined by the current loop dynamics

Peak current to load, $I_P \cong \frac{V_{TH}}{R_{SC}} + \frac{V_O}{R_{SC}}\left(\frac{R2}{R2+R3}\right)$

Short circuit current, $I_{SC} = \frac{V_{TH}}{R_{SC}}$

Low output voltage limit, $V_{O(low)} = \frac{2.5(R4+R5+R6)}{R5+R6}$

High output voltage limit, $V_{O(high)} = \frac{2.5(R4+R5+R6)}{R6}$

Voltage sensing delay, $t_D = 10{,}000C_d$

SCR trigger power limiting resistor, $R_G > \frac{V_{IN}-5}{0.2}$

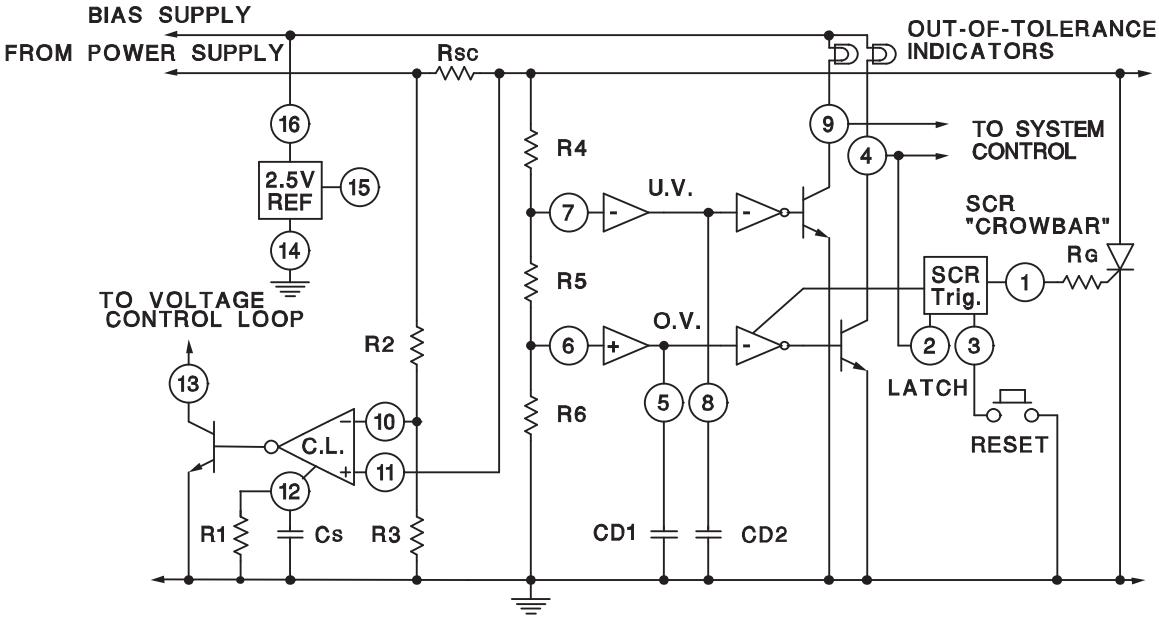

Figure 7. Typical Application

APPLICATION INFORMATION (continued)

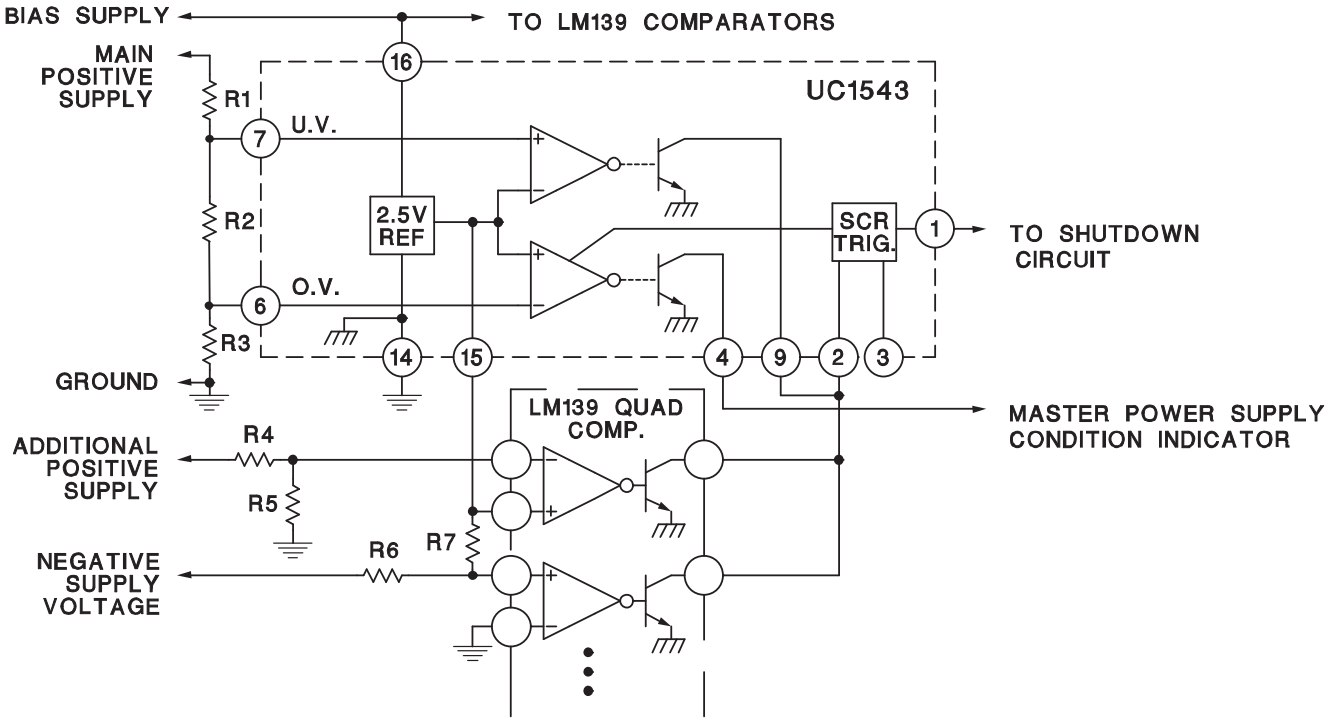

Figure 8. Sensing Multiple Supply Voltages

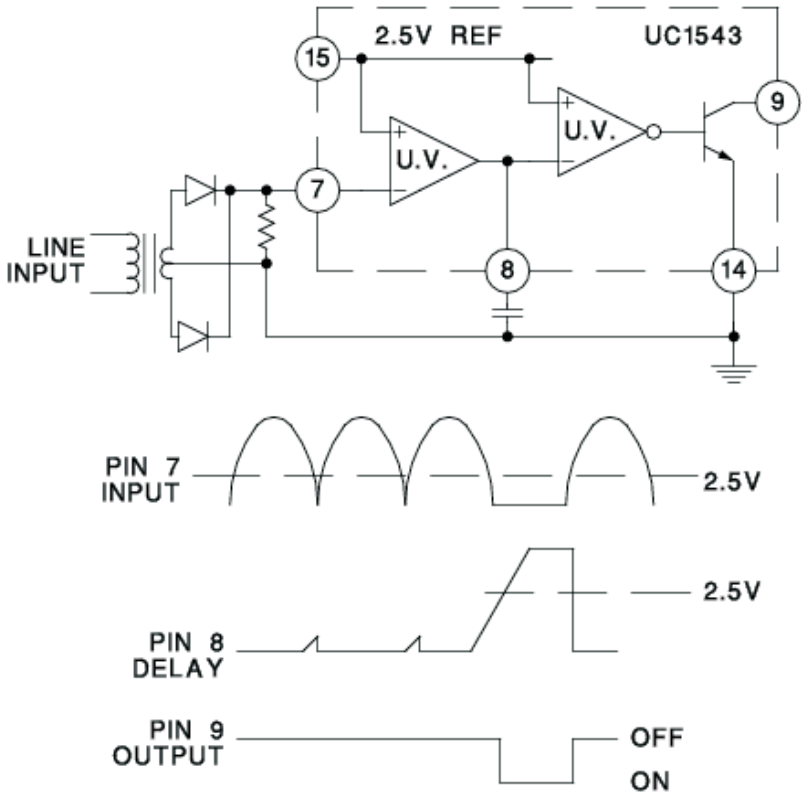

Figure 9. Input Line Monitor

APPLICATION INFORMATION (continued)

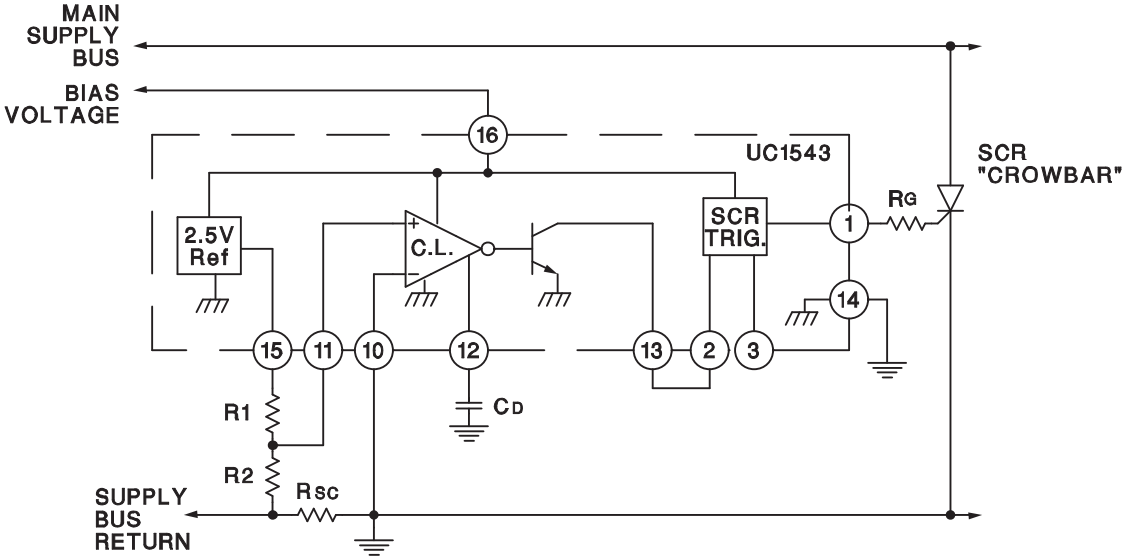

Figure 10. Overcurrent Shutdown

PACKAGING INFORMATION

Orderable Device	Status (1)	Package Type	Package Drawing	Pins	Package Qty	Eco Plan (2)	Lead/Ball Finish (6)	MSL Peak Temp (3)	Op Temp (°C)	Device Marking (4/5)	Samples
5962-8774001EA	ACTIVE	CDIP	J	16	1	TBD	A42	N / A for Pkg Type	-55 to 125	5962-8774001EA UC1543J/883B	Samples
5962-8774001FA	ACTIVE	CFP	W	16	25	TBD	A42	N / A for Pkg Type		5962-8774001FA UC1543W/883B	Samples
UC1543J	ACTIVE	CDIP	J	16	1	TBD	A42	N / A for Pkg Type	-55 to 125	UC1543J	Samples
UC1543J883B	ACTIVE	CDIP	J	16	1	TBD	A42	N / A for Pkg Type	-55 to 125	5962-8774001EA UC1543J/883B	Samples
UC1543L	ACTIVE	LCCC	FK	20	1	TBD	POST-PLATE	N / A for Pkg Type	-55 to 125	UC1543L	Samples
UC1543L883B	ACTIVE	LCCC	FK	20	1	TBD	POST-PLATE	N / A for Pkg Type	-55 to 125	UC1543L/ 883B	Samples
UC1543W883B	ACTIVE	CFP	W	16	25	TBD	A42	N / A for Pkg Type		5962-8774001FA UC1543W/883B	Samples
UC2543DW	NRND	SOIC	DW	16	40	Green (RoHS & no Sb/Br)	CU NIPDAU	Level-2-260C-1 YEAR	-40 to 85	UC2543DW	
UC2543J	ACTIVE	CDIP	J	16	1	TBD	A42	N / A for Pkg Type	-25 to 85	UC2543J	Samples
UC2544DW	NRND	SOIC	DW	18	40	Green (RoHS & no Sb/Br)	CU NIPDAU	Level-2-260C-1 YEAR	-40 to 85	UC2544DW	
UC3543J	ACTIVE	CDIP	J	16	1	TBD	A42	N / A for Pkg Type	0 to 70	UC3543J	Samples

(1) The marketing status values are defined as follows:
ACTIVE: Product device recommended for new designs.
LIFEBUY: TI has announced that the device will be discontinued, and a lifetime-buy period is in effect.
NRND: Not recommended for new designs. Device is in production to support existing customers, but TI does not recommend using this part in a new design.
PREVIEW: Device has been announced but is not in production. Samples may or may not be available.
OBSOLETE: TI has discontinued the production of the device.

(2) **RoHS:** TI defines "RoHS" to mean semiconductor products that are compliant with the current EU RoHS requirements for all 10 RoHS substances, including the requirement that RoHS substance do not exceed 0.1% by weight in homogeneous materials. Where designed to be soldered at high temperatures, "RoHS" products are suitable for use in specified lead-free processes. TI may reference these types of products as "Pb-Free".
RoHS Exempt: TI defines "RoHS Exempt" to mean products that contain lead but are compliant with EU RoHS pursuant to a specific EU RoHS exemption.
Green: TI defines "Green" to mean the content of Chlorine (Cl) and Bromine (Br) based flame retardants meet JS709B low halogen requirements of <=1000ppm threshold. Antimony trioxide based flame retardants must also meet the <=1000ppm threshold requirement.

(3) MSL, Peak Temp. - The Moisture Sensitivity Level rating according to the JEDEC industry standard classifications, and peak solder temperature.

(4) There may be additional marking, which relates to the logo, the lot trace code information, or the environmental category on the device.

(5) Multiple Device Markings will be inside parentheses. Only one Device Marking contained in parentheses and separated by a "~" will appear on a device. If a line is indented then it is a continuation of the previous line and the two combined represent the entire Device Marking for that device.

(6) Lead/Ball Finish - Orderable Devices may have multiple material finish options. Finish options are separated by a vertical ruled line. Lead/Ball Finish values may wrap to two lines if the finish value exceeds the maximum column width.

Important Information and Disclaimer: The information provided on this page represents TI's knowledge and belief as of the date that it is provided. TI bases its knowledge and belief on information provided by third parties, and makes no representation or warranty as to the accuracy of such information. Efforts are underway to better integrate information from third parties. TI has taken and continues to take reasonable steps to provide representative and accurate information but may not have conducted destructive testing or chemical analysis on incoming materials and chemicals. TI and TI suppliers consider certain information to be proprietary, and thus CAS numbers and other limited information may not be available for release.

In no event shall TI's liability arising out of such information exceed the total purchase price of the TI part(s) at issue in this document sold by TI to Customer on an annual basis.

OTHER QUALIFIED VERSIONS OF UC2543, UC2543M, UC3543M :

- Catalog: UC2543
- Military: UC2543M, UC1543

NOTE: Qualified Version Definitions:

- Catalog - TI's standard catalog product
- Military - QML certified for Military and Defense Applications

FK (S–CQCC–N**) LEADLESS CERAMIC CHIP CARRIER

28 TERMINAL SHOWN

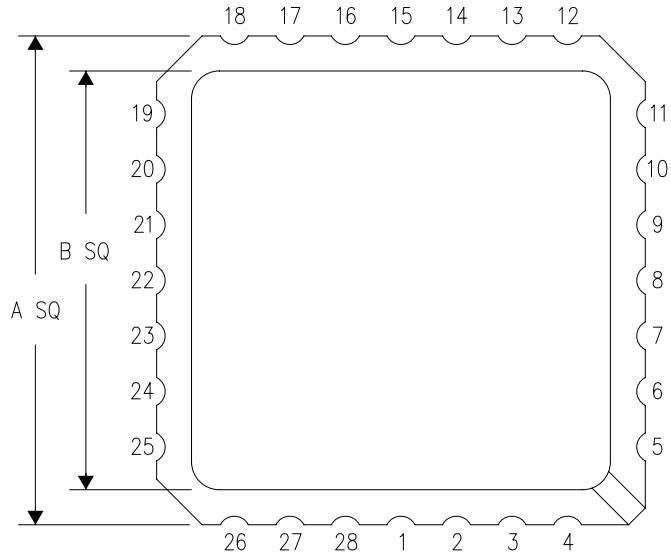

NO. OF TERMINALS **	A		B	
	MIN	MAX	MIN	MAX
20	0.342 (8,69)	0.358 (9,09)	0.307 (7,80)	0.358 (9,09)
28	0.442 (11,23)	0.458 (11,63)	0.406 (10,31)	0.458 (11,63)
44	0.640 (16,26)	0.660 (16,76)	0.495 (12,58)	0.560 (14,22)
52	0.740 (18,78)	0.761 (19,32)	0.495 (12,58)	0.560 (14,22)
68	0.938 (23,83)	0.962 (24,43)	0.850 (21,6)	0.858 (21,8)
84	1.141 (28,99)	1.165 (29,59)	1.047 (26,6)	1.063 (27,0)

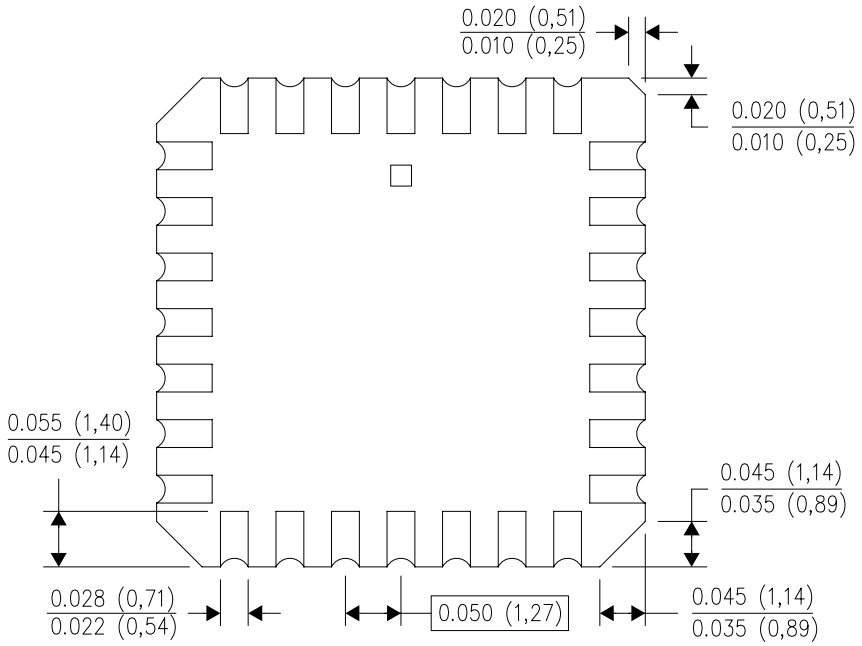

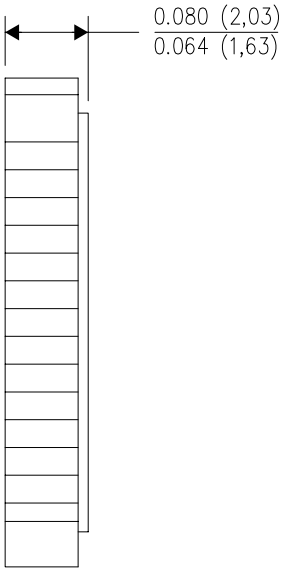

4040140/D 01/11

NOTES:
A. All linear dimensions are in inches (millimeters).
B. This drawing is subject to change without notice.
C. This package can be hermetically sealed with a metal lid.
D. Falls within JEDEC MS–004

GENERIC PACKAGE VIEW

DW 16

SOIC - 2.65 mm max height

7.5 x 10.3, 1.27 mm pitch

SMALL OUTLINE INTEGRATED CIRCUIT

This image is a representation of the package family, actual package may vary.
Refer to the product data sheet for package details.

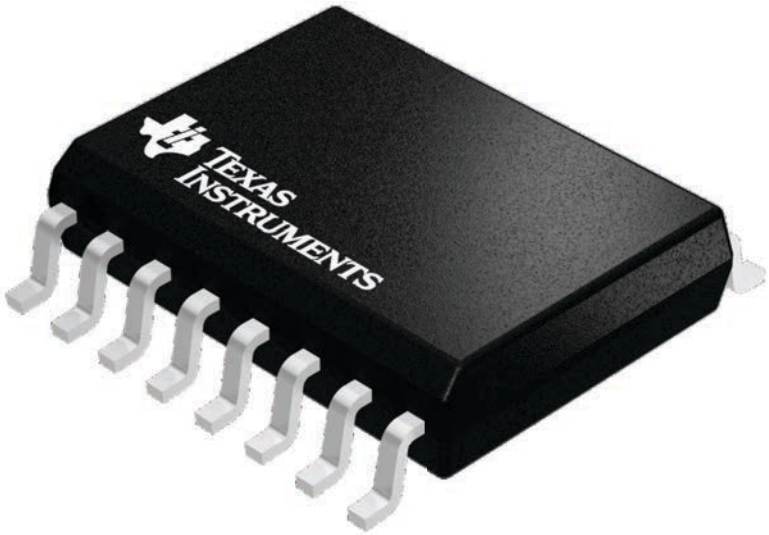

4224780/A

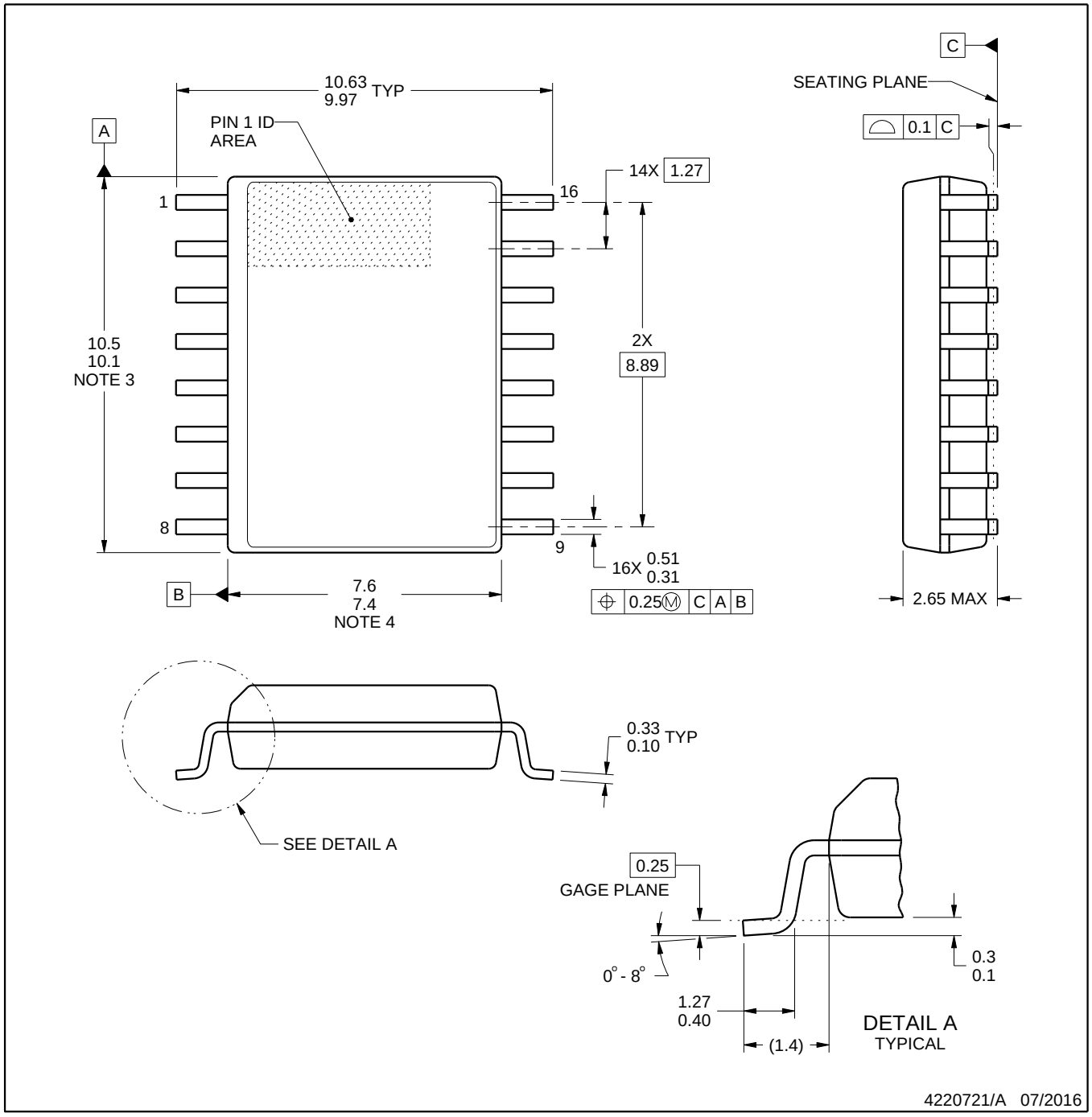

NOTES:

1. All linear dimensions are in millimeters. Dimensions in parenthesis are for reference only. Dimensioning and tolerancing per ASME Y14.5M.
2. This drawing is subject to change without notice.
3. This dimension does not include mold flash, protrusions, or gate burrs. Mold flash, protrusions, or gate burrs shall not exceed 0.15 mm, per side.
4. This dimension does not include interlead flash. Interlead flash shall not exceed 0.25 mm, per side.
5. Reference JEDEC registration MS-013.

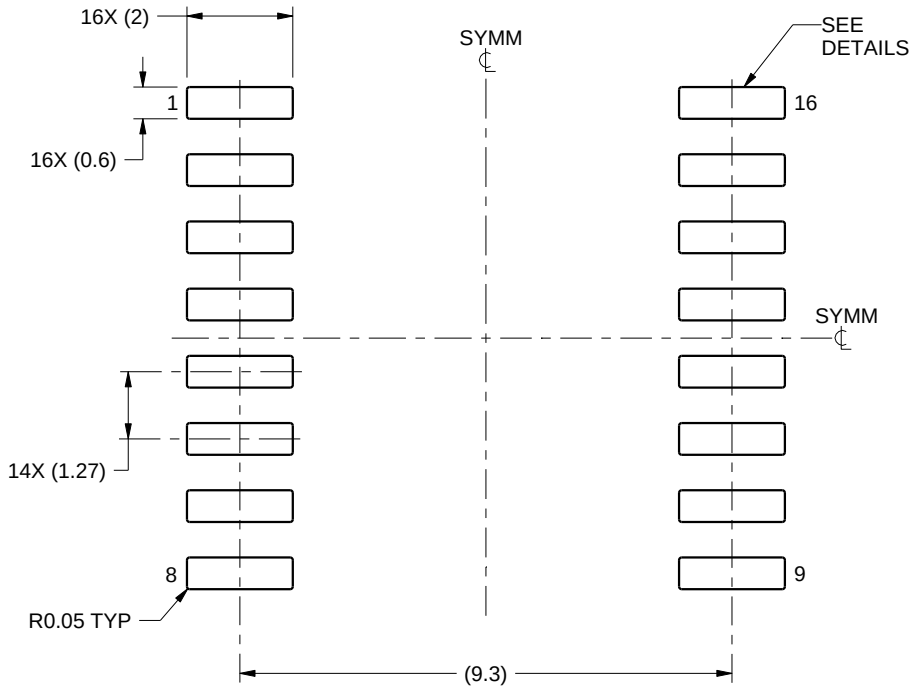

LAND PATTERN EXAMPLE
SCALE:7X

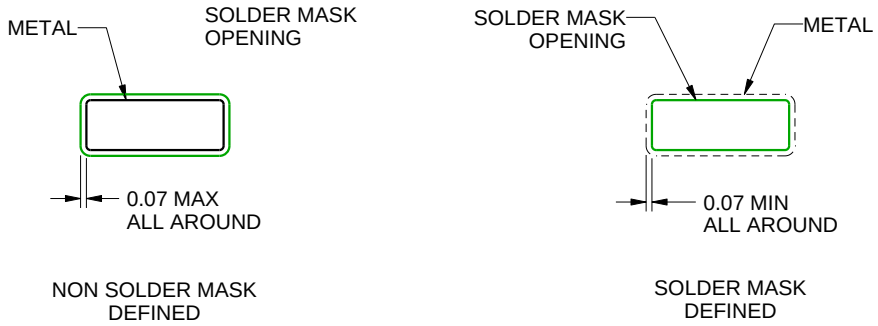

SOLDER MASK DETAILS

4220721/A 07/2016

NOTES: (continued)

6. Publication IPC-7351 may have alternate designs.
7. Solder mask tolerances between and around signal pads can vary based on board fabrication site.

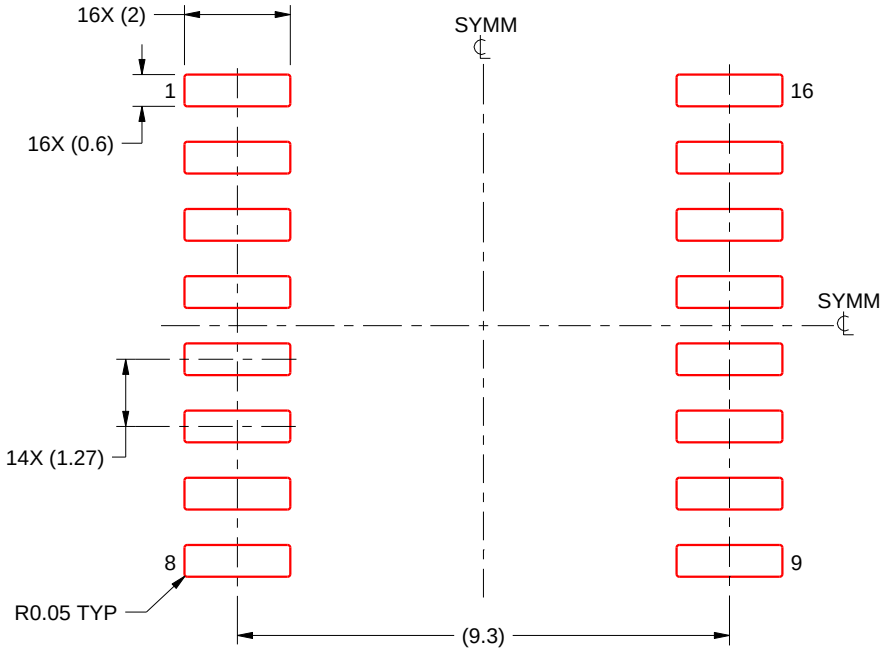

SOLDER PASTE EXAMPLE
BASED ON 0.125 mm THICK STENCIL
SCALE:7X

4220721/A 07/2016

NOTES: (continued)

8. Laser cutting apertures with trapezoidal walls and rounded corners may offer better paste release. IPC-7525 may have alternate design recommendations.
9. Board assembly site may have different recommendations for stencil design.

W (R–GDFP–F16) CERAMIC DUAL FLATPACK

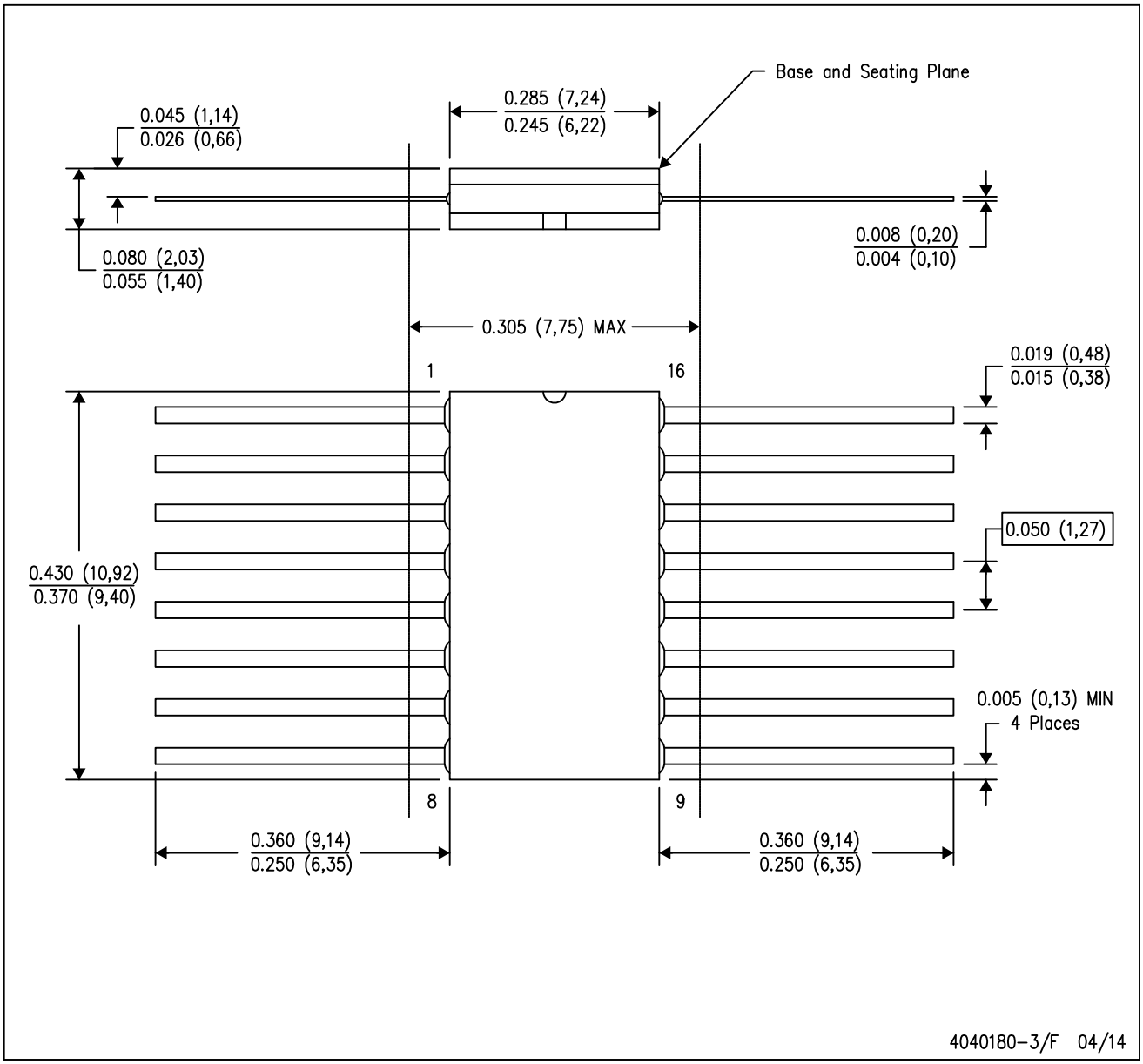

NOTES:
A. All linear dimensions are in inches (millimeters).
B. This drawing is subject to change without notice.
C. This package can be hermetically sealed with a ceramic lid using glass frit.
D. Index point is provided on cap for terminal identification only.
E. Falls within MIL STD 1835 GDFP2–F16

J (R–GDIP–T**) CERAMIC DUAL IN–LINE PACKAGE

14 LEADS SHOWN

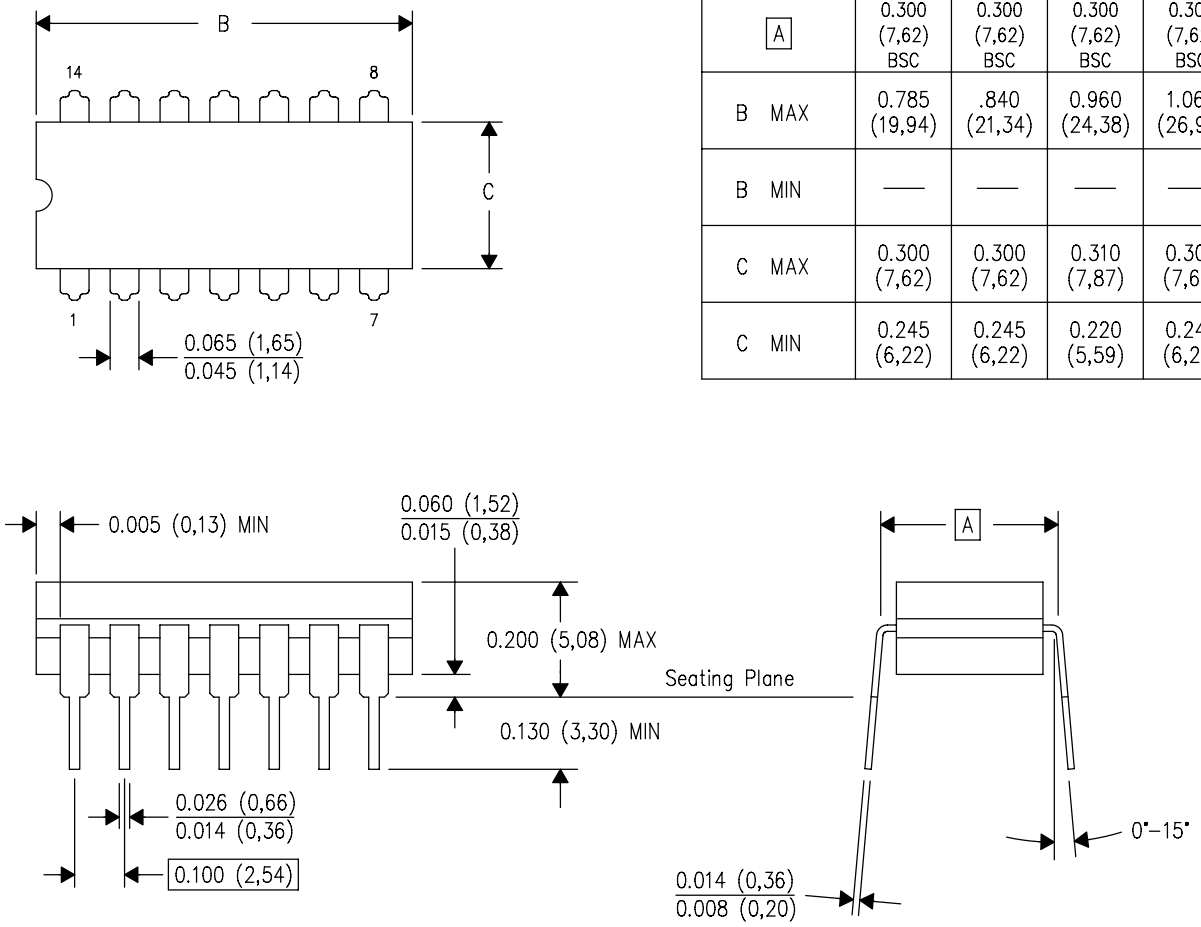

DIM \ PINS **	14	16	18	20
A	0.300 (7,62) BSC	0.300 (7,62) BSC	0.300 (7,62) BSC	0.300 (7,62) BSC
B MAX	0.785 (19,94)	.840 (21,34)	0.960 (24,38)	1.060 (26,92)
B MIN	—	—	—	—
C MAX	0.300 (7,62)	0.300 (7,62)	0.310 (7,87)	0.300 (7,62)
C MIN	0.245 (6,22)	0.245 (6,22)	0.220 (5,59)	0.245 (6,22)

4040083/F 03/03

NOTES:
- A. All linear dimensions are in inches (millimeters).
- B. This drawing is subject to change without notice.
- C. This package is hermetically sealed with a ceramic lid using glass frit.
- D. Index point is provided on cap for terminal identification only on press ceramic glass frit seal only.
- E. Falls within MIL STD 1835 GDIP1–T14, GDIP1–T16, GDIP1–T18 and GDIP1–T20.

DW (R–PDSO–G18) PLASTIC SMALL OUTLINE

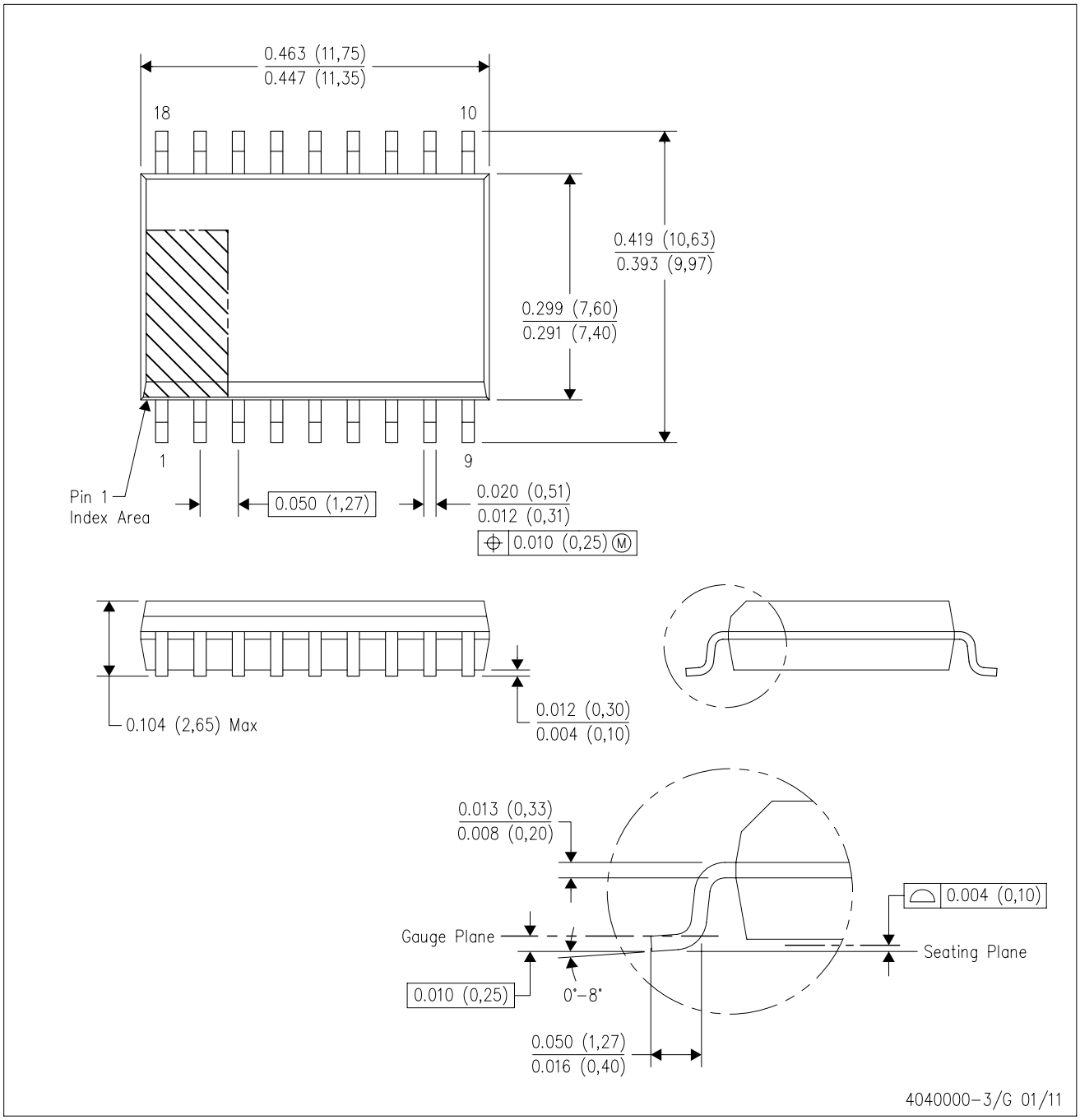

NOTES:
A. All linear dimensions are in inches (millimeters). Dimensioning and tolerancing per ASME Y14.5M–1994.
B. This drawing is subject to change without notice.
C. Body dimensions do not include mold flash or protrusion not to exceed 0.006 (0,15).
D. Falls within JEDEC MS–013 variation AB.

DW (R–PDSO–G18) PLASTIC SMALL OUTLINE

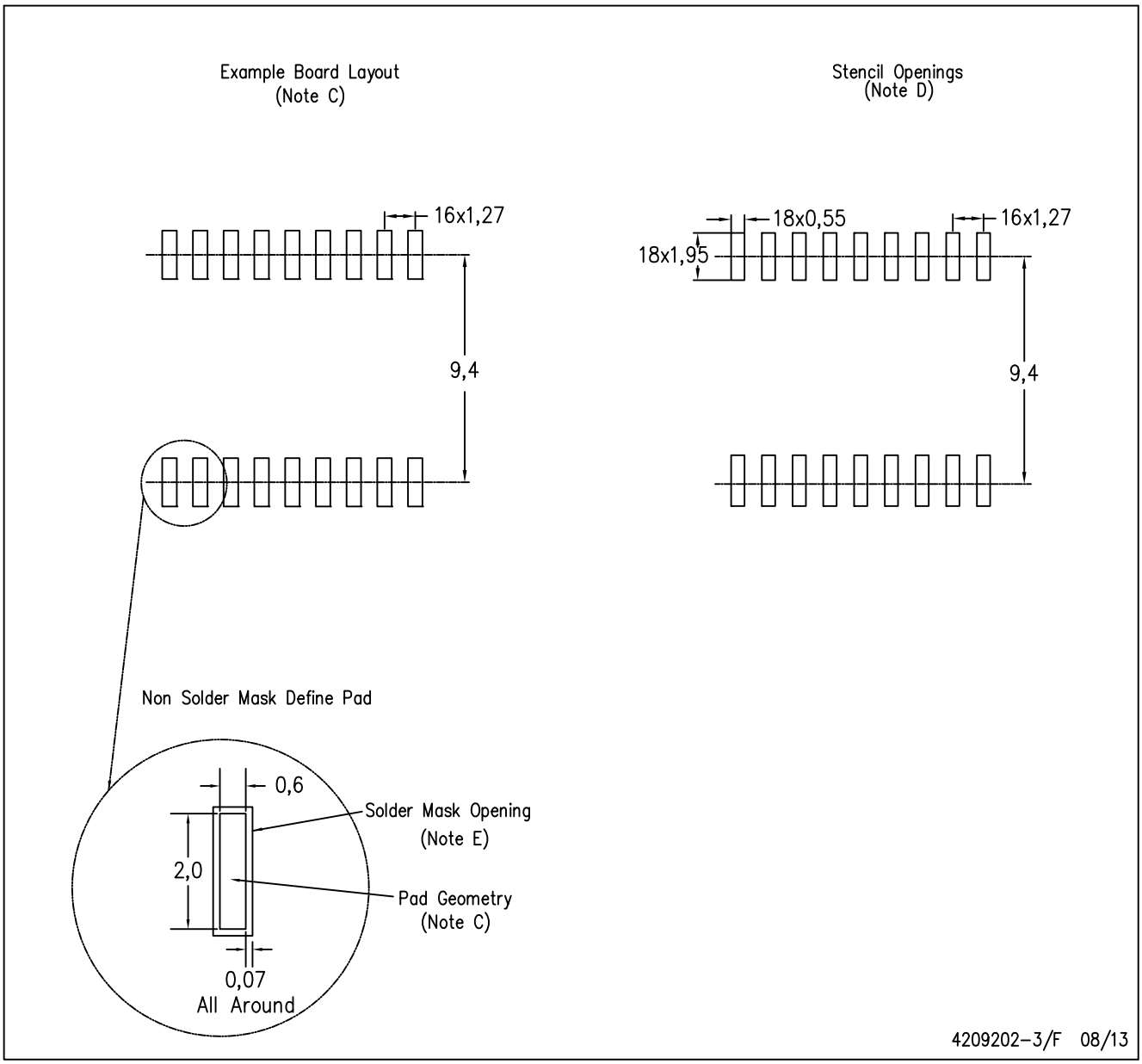

NOTES:
A. All linear dimensions are in millimeters.
B. This drawing is subject to change without notice.
C. Refer to IPC7351 for alternate board design.
D. Laser cutting apertures with trapezoidal walls and also rounding corners will offer better paste release. Customers should contact their board assembly site for stencil design recommendations. Refer to IPC–7525
E. Customers should contact their board fabrication site for solder mask tolerances between and around signal pads.

IMPORTANT NOTICE AND DISCLAIMER

TI PROVIDES TECHNICAL AND RELIABILITY DATA (INCLUDING DATASHEETS), DESIGN RESOURCES (INCLUDING REFERENCE DESIGNS), APPLICATION OR OTHER DESIGN ADVICE, WEB TOOLS, SAFETY INFORMATION, AND OTHER RESOURCES “AS IS” AND WITH ALL FAULTS, AND DISCLAIMS ALL WARRANTIES, EXPRESS AND IMPLIED, INCLUDING WITHOUT LIMITATION ANY IMPLIED WARRANTIES OF MERCHANTABILITY, FITNESS FOR A PARTICULAR PURPOSE OR NON-INFRINGEMENT OF THIRD PARTY INTELLECTUAL PROPERTY RIGHTS.

These resources are intended for skilled developers designing with TI products. You are solely responsible for (1) selecting the appropriate TI products for your application, (2) designing, validating and testing your application, and (3) ensuring your application meets applicable standards, and any other safety, security, or other requirements. These resources are subject to change without notice. TI grants you permission to use these resources only for development of an application that uses the TI products described in the resource. Other reproduction and display of these resources is prohibited. No license is granted to any other TI intellectual property right or to any third party intellectual property right. TI disclaims responsibility for, and you will fully indemnify TI and its representatives against, any claims, damages, costs, losses, and liabilities arising out of your use of these resources.

TI’s products are provided subject to TI’s Terms of Sale (www.ti.com/legal/termsofsale.html) or other applicable terms available either on ti.com or provided in conjunction with such TI products. TI’s provision of these resources does not expand or otherwise alter TI’s applicable warranties or warranty disclaimers for TI products.

Mailing Address: Texas Instruments, Post Office Box 655303, Dallas, Texas 75265
Copyright © 2019, Texas Instruments Incorporated