- **Parallel-to-Serial, Serial-to-Parallel Conversions**
- **Left or Right Shifts**
- **Parallel Synchronous Loading**
- **Direct Overriding Clear**
- **Temporary Data-Latching Capability**
- **Package Options Include Plastic Small-Outline Packages (D), Ceramic Chip Carriers (FK), and Standard Plastic (N) and Ceramic (J) 300-mil DIPs**

SN54AS194 . . . J PACKAGE
SN74AS194 . . . D OR N PACKAGE
(TOP VIEW)

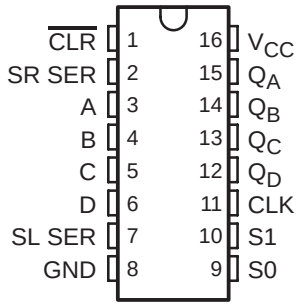

SN54AS194 . . . FK PACKAGE
(TOP VIEW)

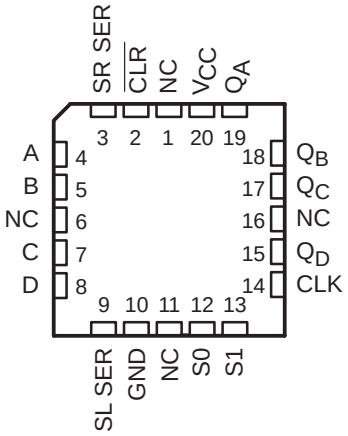

NC − No internal connection

description

These 4-bit bidirectional universal shift registers feature parallel outputs, right-shift and left-shift serial (SR SER, SL SER) inputs, operating-mode-control (S0, S1) inputs, and a direct overriding clear ($\overline{CLR}$) line. The registers have four distinct modes of operation:

- Inhibit clock (temporary data latch/do nothing)
- Shift right (in the direction Q_A toward Q_D)
- Shift left (in the direction Q_D toward Q_A)
- Parallel (broadside) load

Parallel synchronous loading is accomplished by applying the four bits of data and taking both S0 and S1 high. The data is loaded into the associated flip-flops and appears at the outputs after the positive transition of the clock (CLK) input. During loading, serial data flow is inhibited.

Shift right is accomplished synchronously with the rising edge of the clock pulse when S0 is high and S1 is low. Serial data for this mode is entered at the shift-right data input. When S0 is low and S1 is high, data shifts left synchronously and new data is entered at the shift-left serial inputs. Clocking of the flip-flop is inhibited when both mode-control inputs are low.

The SN54AS194 is characterized for operation over the full military temperature range of −55°C to 125°C. The SN74AS194 is characterized for operation from 0°C to 70°C.

PRODUCTION DATA information is current as of publication date. Products conform to specifications per the terms of Texas Instruments standard warranty. Production processing does not necessarily include testing of all parameters.

Copyright © 1994, Texas Instruments Incorporated

FUNCTION TABLE

INPUTS										OUTPUTS			
$\overline{CLR}$	MODE		CLK	SERIAL		PARALLEL				Q_A	Q_B	Q_C	Q_D
	S1	S0		LEFT	RIGHT	A	B	C	D				
L	X	X	X	X	X	X	X	X	X	L	L	L	L
H	X	X	L	X	X	X	X	X	X	Q_{A0}	Q_{B0}	Q_{C0}	Q_{D0}
H	H	H	↑	X	X	a	b	c	d	a	b	c	d
H	L	H	↑	X	H	X	X	X	X	H	Q_{An}	Q_{Bn}	Q_{Cn}
H	L	H	↑	X	L	X	X	X	X	L	Q_{An}	Q_{Bn}	Q_{Cn}
H	H	L	↑	H	X	X	X	X	X	Q_{Bn}	Q_{Cn}	Q_{Dn}	H
H	H	L	↑	L	X	X	X	X	X	Q_{Bn}	Q_{Cn}	Q_{Dn}	L
H	L	L	X	X	X	X	X	X	X	Q_{A0}	Q_{B0}	Q_{C0}	Q_{D0}

H = high level (steady state); L = low level (steady state); X = irrelevant (any input, including transitions); ↑ = transition from low to high level; a, b, c, d = the level of steady-state input at inputs A, B, C, or D, respectively; Q_{A0}, Q_{B0}, Q_{C0}, Q_{D0} = the level of Q_A, Q_B, Q_C, or Q_D, respectively, before the indicated steady-state input conditions were established; Q_{An}, Q_{Bn}, Q_{Cn}, Q_{Dn} = the level of Q_A, Q_B, Q_C, respectively, before the most recent ↑ transition of the clock.

logic symbol†

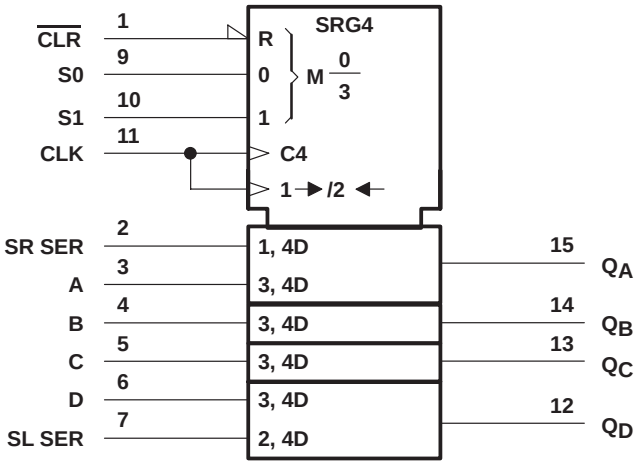

† This symbol is in accordance with ANSI/IEEE Std 91-1984 and IEC Publication 617-12.

logic diagram (positive logic)

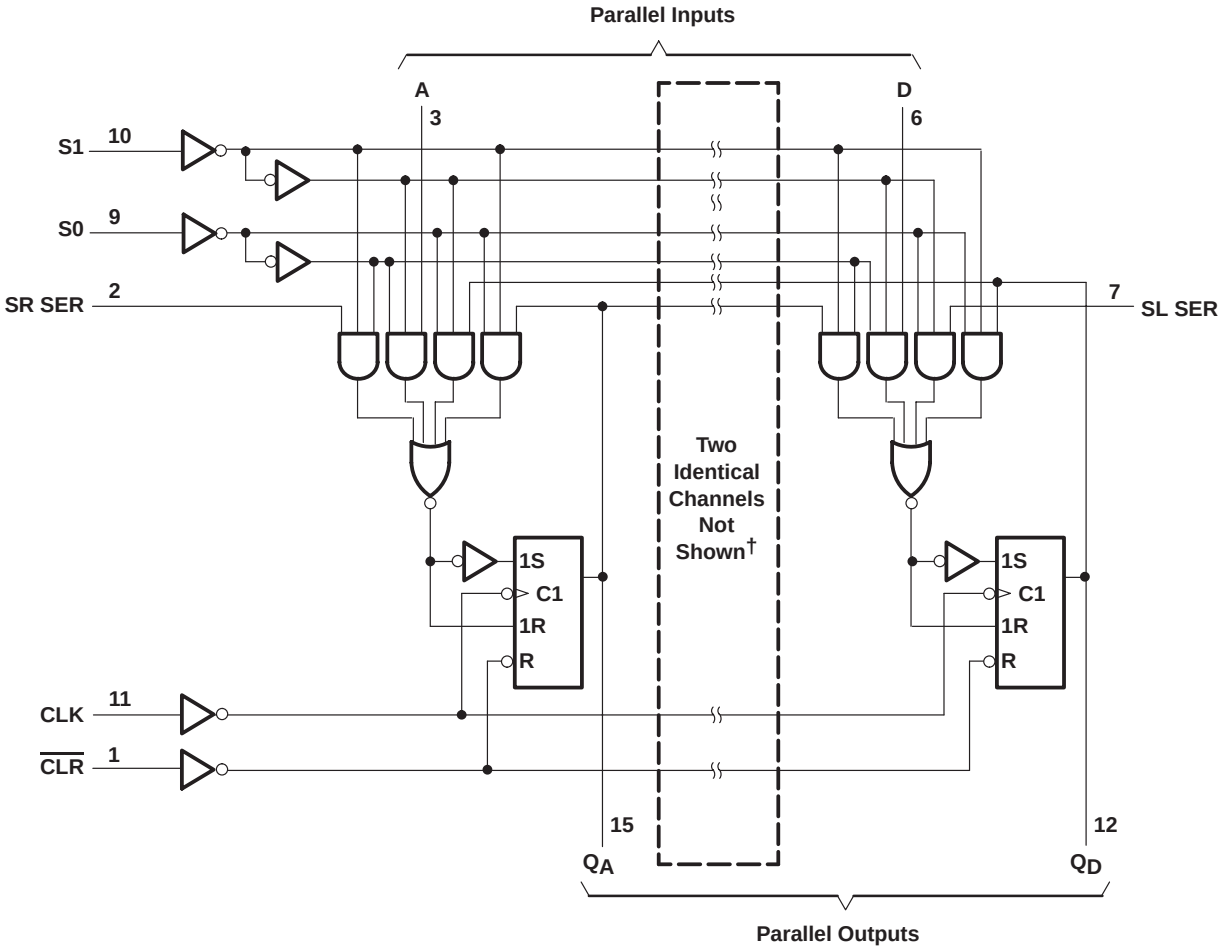

† I/O ports not shown: Q_B (14) and Q_C (13)
Pin numbers shown are for the D, J, and N packages.

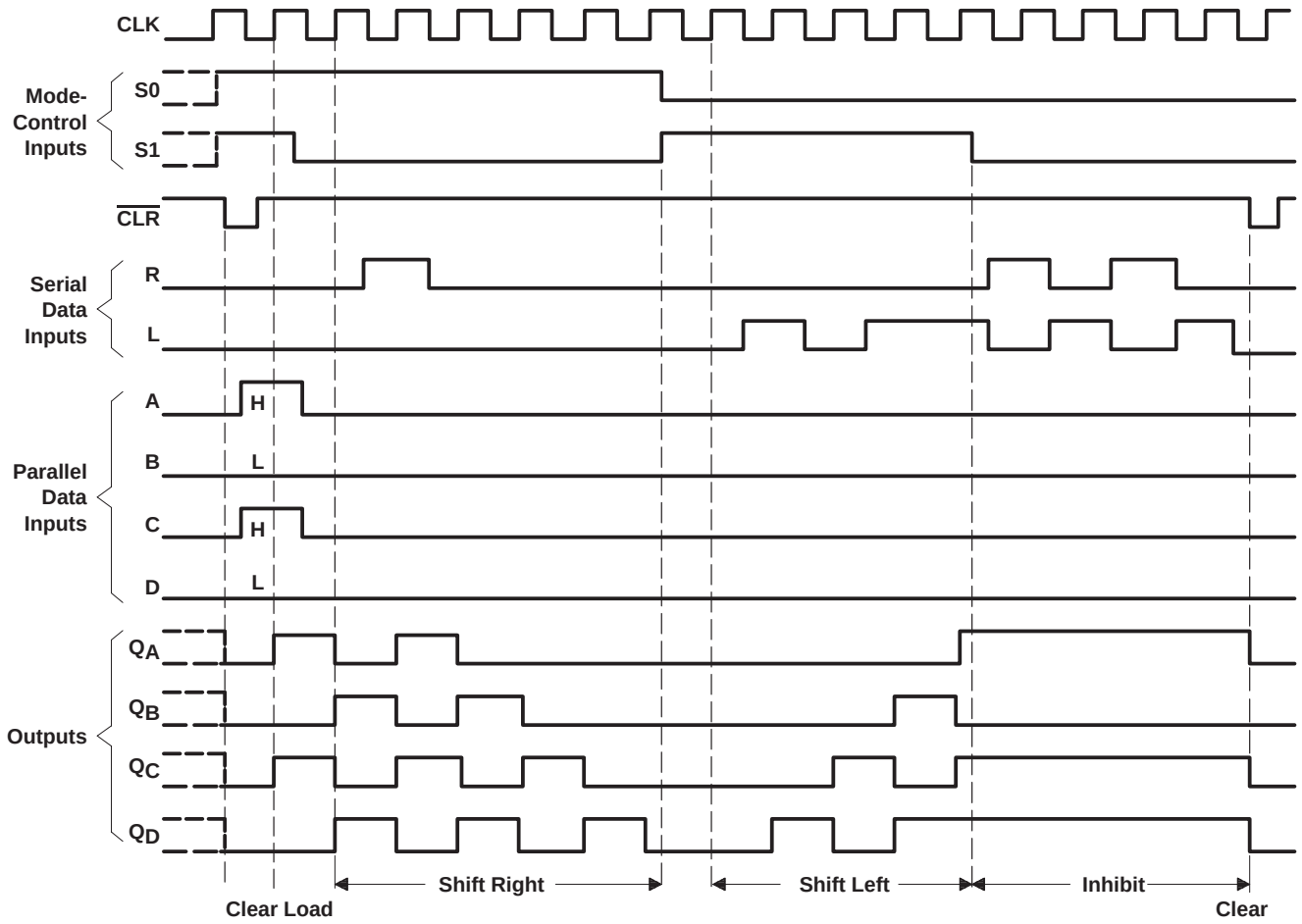

Figure 1. Typical Clear, Load, Right-Shift, and Clear Sequences

absolute maximum ratings over operating free-air temperature range (unless otherwise noted)†

Supply voltage, V_{CC} . . . . . 7 V
Input voltage, V_I . . . . . 7 V
Operating free-air temperature range, T_A: SN54AS194 . . . . . −55°C to 125°C
SN74AS194 . . . . . 0°C to 70°C
Storage temperature range . . . . . −65°C to 150°C

† Stresses beyond those listed under “absolute maximum ratings” may cause permanent damage to the device. These are stress ratings only, and functional operation of the device at these or any other conditions beyond those indicated under “recommended operating conditions” is not implied. Exposure to absolute-maximum-rated conditions for extended periods may affect device reliability.

recommended operating conditions

			SN54AS194			SN74AS194			UNIT
			MIN	NOM	MAX	MIN	NOM	MAX	
V_{CC}	Supply voltage		4.5	5	5.5	4.5	5	5.5	V
V_{IH}	High-level input voltage		2			2			V
V_{IL}	Low-level input voltage				0.8			0.8	V
I_{OH}	High-level output current				−2			−2	mA
I_{OL}	Low-level output current				20			20	mA
f_{clock}*	Clock frequency		0		75	0		80	MHz
t_w*	Pulse duration	$\overline{CLR}$	4			4.5			ns
		CLK high	4			4			
		CLK low	6			7			
t_{su}*	Setup time before CLK↑	Select	9			9.5			ns
		Data	3.5			4			
		Clear inactive state	6			6			
t_h*	Hold time, data after CLK↑		0.5			0.5			ns
T_A	Operating free-air temperature		−55		125	0		70	°C

* On products compliant to MIL-STD-883, Class B, these parameters are based on characterization data, but are not production tested.

electrical characteristics over recommended operating free-air temperature range (unless otherwise noted)

PARAMETER		TEST CONDITIONS		SN54AS194			SN74AS194			UNIT
				MIN	TYP†	MAX	MIN	TYP†	MAX	
V_{IK}		V_{CC} = 4.5 V,	I_I = −18 mA			−1.2			−1.2	V
V_{OH}		V_{CC} = 4.5 V to 5.5 V,	I_{OH} = −2 mA	V_{CC}−2			V_{CC}−2			V
V_{OL}		V_{CC} = 4.5 V,	I_{OL} = 20 mA		0.35	0.5		0.35	0.5	V
I_I	Data, CLK, $\overline{CLR}$	V_{CC} = 5.5 V,	V_I = 7 V			0.1			0.1	mA
	Mode, SL, SR					0.2			0.2	
I_{IH}	Data, CLK, $\overline{CLR}$	V_{CC} = 5.5 V,	V_I = 2.7 V			20			20	µA
	Mode, SL, SR					40			40	
I_{IL}	Data, CLK, $\overline{CLR}$	V_{CC} = 5.5 V,	V_I = 0.4 V			−0.5			−0.5	mA
	Mode, SL, SR					−1			−1	
I_O‡		V_{CC} = 5.5 V,	V_O = 2.25 V	−30		−112	−30		−112	mA
I_{CC}		V_{CC} = 5.5 V	Outputs high		30	49		30	43	mA
			Outputs low		38	60		38	53	

† All typical values are at V_{CC} = 5 V, T_A = 25°C.
‡ The output conditions have been chosen to produce a current that closely approximates one half of the true short-circuit output current, I_{OS}.

switching characteristics (see Figure 2)

PARAMETER	FROM (INPUT)	TO (OUTPUT)	V_{CC} = 4.5 V to 5.5 V, C_L = 50 pF, R_L = 500 Ω, T_A = MIN to MAX†				UNIT
			SN54AS194		SN74AS194		
			MIN	MAX	MIN	MAX	
f_{max}*			75		80		MHz
t_{PLH}	CLK	Any Q	2.5	8	3	7	ns
t_{PHL}			2.5	8	3	7	
t_{PHL}	$\overline{CLR}$	Any Q	3.5	13	4	12	ns

* On products compliant to MIL-STD-883, Class B, these parameters are based on characterization data, but are not production tested.
† For conditions shown as MIN or MAX, use the appropriate value specified under recommended operating conditions.

PARAMETER MEASUREMENT INFORMATION
SERIES 54ALS/74ALS AND 54AS/74AS DEVICES

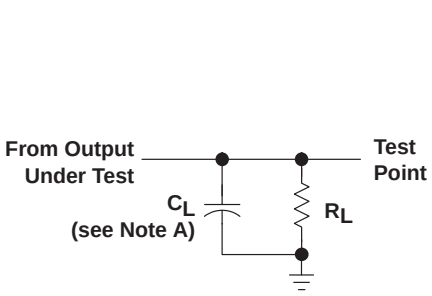

LOAD CIRCUIT FOR
BI-STATE
TOTEM-POLE OUTPUTS

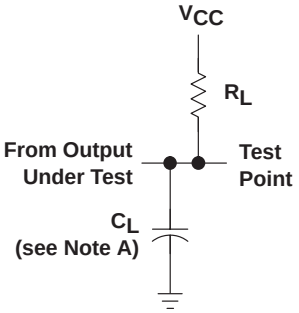

LOAD CIRCUIT
FOR OPEN-COLLECTOR OUTPUTS

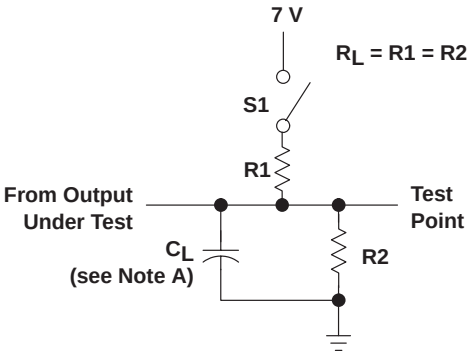

LOAD CIRCUIT
FOR 3-STATE OUTPUTS

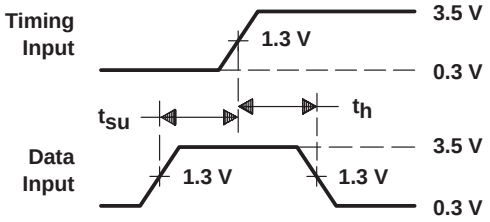

VOLTAGE WAVEFORMS
SETUP AND HOLD TIMES

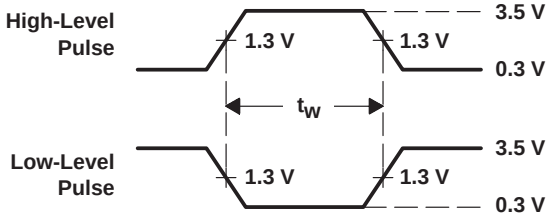

VOLTAGE WAVEFORMS
PULSE DURATIONS

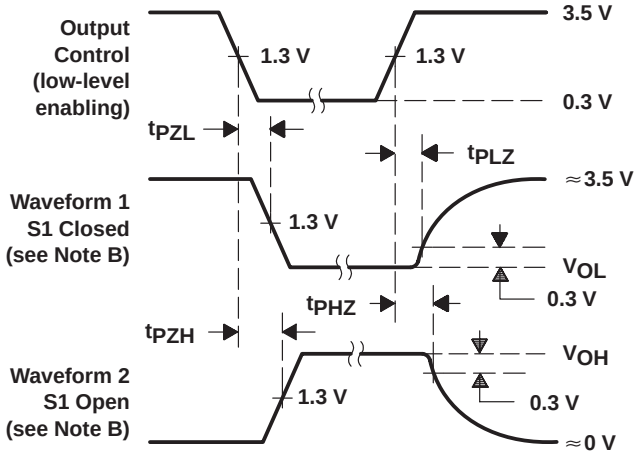

VOLTAGE WAVEFORMS
ENABLE AND DISABLE TIMES, 3-STATE OUTPUTS

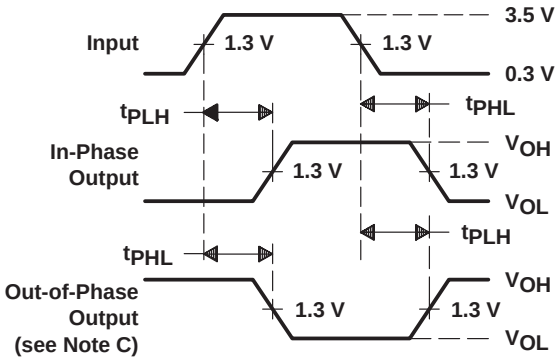

VOLTAGE WAVEFORMS
PROPAGATION DELAY TIMES

NOTES: A. C_L includes probe and jig capacitance.
B. Waveform 1 is for an output with internal conditions such that the output is low except when disabled by the output control. Waveform 2 is for an output with internal conditions such that the output is high except when disabled by the output control.
C. When measuring propagation delay items of 3-state outputs, switch S1 is open.
D. All input pulses have the following characteristics: PRR ≤ 1 MHz, $t_r = t_f$ = 2 ns, duty cycle = 50%.
E. The outputs are measured one at a time with one transition per measurement.

Figure 2. Load Circuits and Voltage Waveforms

PACKAGING INFORMATION

Orderable Device	Status (1)	Package Type	Package Drawing	Pins	Package Qty	Eco Plan (2)	Lead/Ball Finish (6)	MSL Peak Temp (3)	Op Temp (°C)	Device Marking (4/5)	Samples
SN74AS194D	ACTIVE	SOIC	D	16	40	Green (RoHS & no Sb/Br)	CU NIPDAU	Level-1-260C-UNLIM	0 to 70	AS194	Samples
SN74AS194DR	ACTIVE	SOIC	D	16	2500	Green (RoHS & no Sb/Br)	CU NIPDAU	Level-1-260C-UNLIM	0 to 70	AS194	Samples

(1) The marketing status values are defined as follows:
ACTIVE: Product device recommended for new designs.
LIFEBUY: TI has announced that the device will be discontinued, and a lifetime-buy period is in effect.
NRND: Not recommended for new designs. Device is in production to support existing customers, but TI does not recommend using this part in a new design.
PREVIEW: Device has been announced but is not in production. Samples may or may not be available.
OBSOLETE: TI has discontinued the production of the device.

(2) Eco Plan - The planned eco-friendly classification: Pb-Free (RoHS), Pb-Free (RoHS Exempt), or Green (RoHS & no Sb/Br) - please check http://www.ti.com/productcontent for the latest availability information and additional product content details.
TBD: The Pb-Free/Green conversion plan has not been defined.
Pb-Free (RoHS): TI's terms "Lead-Free" or "Pb-Free" mean semiconductor products that are compatible with the current RoHS requirements for all 6 substances, including the requirement that lead not exceed 0.1% by weight in homogeneous materials. Where designed to be soldered at high temperatures, TI Pb-Free products are suitable for use in specified lead-free processes.
Pb-Free (RoHS Exempt): This component has a RoHS exemption for either 1) lead-based flip-chip solder bumps used between the die and package, or 2) lead-based die adhesive used between the die and leadframe. The component is otherwise considered Pb-Free (RoHS compatible) as defined above.
Green (RoHS & no Sb/Br): TI defines "Green" to mean Pb-Free (RoHS compatible), and free of Bromine (Br) and Antimony (Sb) based flame retardants (Br or Sb do not exceed 0.1% by weight in homogeneous material)

(3) MSL, Peak Temp. - The Moisture Sensitivity Level rating according to the JEDEC industry standard classifications, and peak solder temperature.

(4) There may be additional marking, which relates to the logo, the lot trace code information, or the environmental category on the device.

(5) Multiple Device Markings will be inside parentheses. Only one Device Marking contained in parentheses and separated by a "~" will appear on a device. If a line is indented then it is a continuation of the previous line and the two combined represent the entire Device Marking for that device.

(6) Lead/Ball Finish - Orderable Devices may have multiple material finish options. Finish options are separated by a vertical ruled line. Lead/Ball Finish values may wrap to two lines if the finish value exceeds the maximum column width.

Important Information and Disclaimer: The information provided on this page represents TI's knowledge and belief as of the date that it is provided. TI bases its knowledge and belief on information provided by third parties, and makes no representation or warranty as to the accuracy of such information. Efforts are underway to better integrate information from third parties. TI has taken and continues to take reasonable steps to provide representative and accurate information but may not have conducted destructive testing or chemical analysis on incoming materials and chemicals. TI and TI suppliers consider certain information to be proprietary, and thus CAS numbers and other limited information may not be available for release.

In no event shall TI's liability arising out of such information exceed the total purchase price of the TI part(s) at issue in this document sold by TI to Customer on an annual basis.

TAPE AND REEL INFORMATION

REEL DIMENSIONS

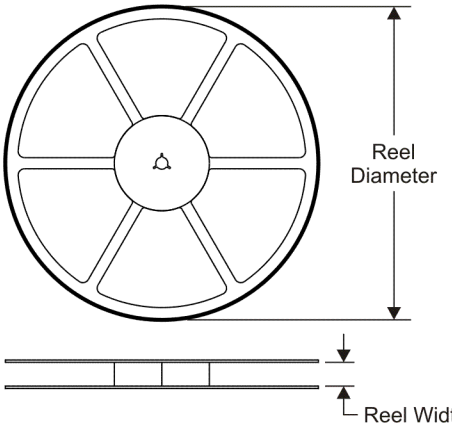

TAPE DIMENSIONS

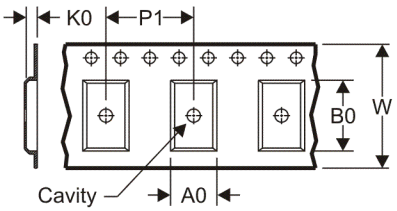

A0	Dimension designed to accommodate the component width
B0	Dimension designed to accommodate the component length
K0	Dimension designed to accommodate the component thickness
W	Overall width of the carrier tape
P1	Pitch between successive cavity centers

QUADRANT ASSIGNMENTS FOR PIN 1 ORIENTATION IN TAPE

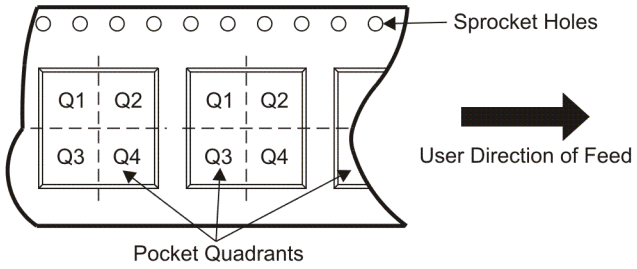

*All dimensions are nominal

Device	Package Type	Package Drawing	Pins	SPQ	Reel Diameter (mm)	Reel Width W1 (mm)	A0 (mm)	B0 (mm)	K0 (mm)	P1 (mm)	W (mm)	Pin1 Quadrant
SN74AS194DR	SOIC	D	16	2500	330.0	16.4	6.5	10.3	2.1	8.0	16.0	Q1

TAPE AND REEL BOX DIMENSIONS

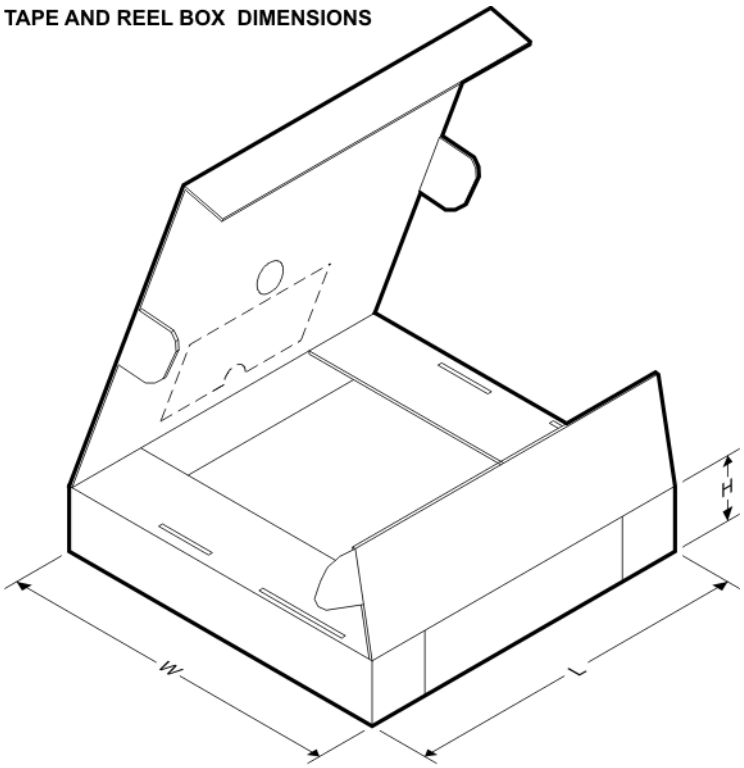

*All dimensions are nominal

Device	Package Type	Package Drawing	Pins	SPQ	Length (mm)	Width (mm)	Height (mm)
SN74AS194DR	SOIC	D	16	2500	333.2	345.9	28.6

D (R–PDSO–G16) PLASTIC SMALL OUTLINE

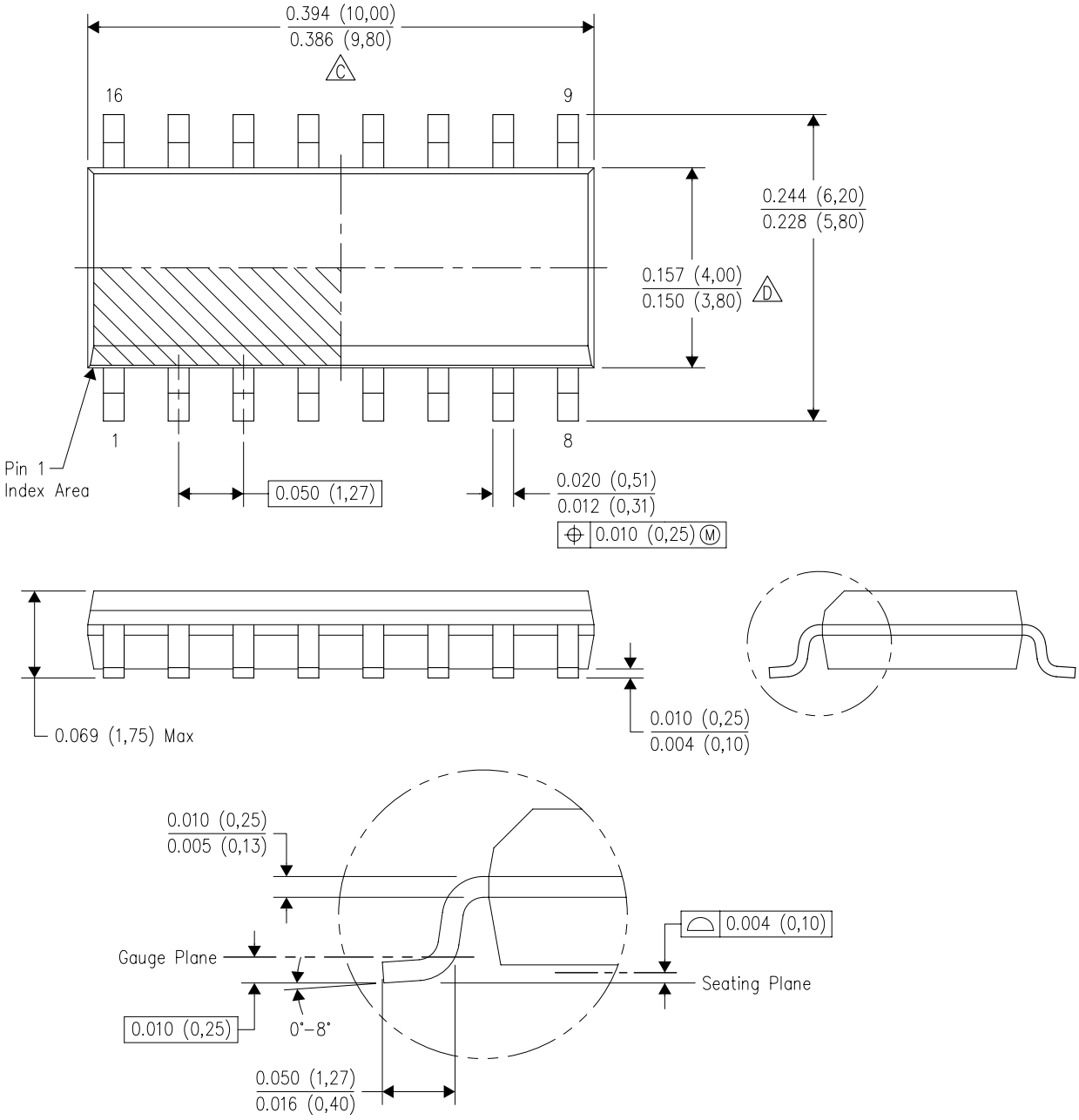

NOTES:
A. All linear dimensions are in inches (millimeters).
B. This drawing is subject to change without notice.
C. Body length does not include mold flash, protrusions, or gate burrs. Mold flash, protrusions, or gate burrs shall not exceed 0.006 (0,15) each side.
D. Body width does not include interlead flash. Interlead flash shall not exceed 0.017 (0,43) each side.
E. Reference JEDEC MS–012 variation AC.

D (R–PDSO–G16) PLASTIC SMALL OUTLINE

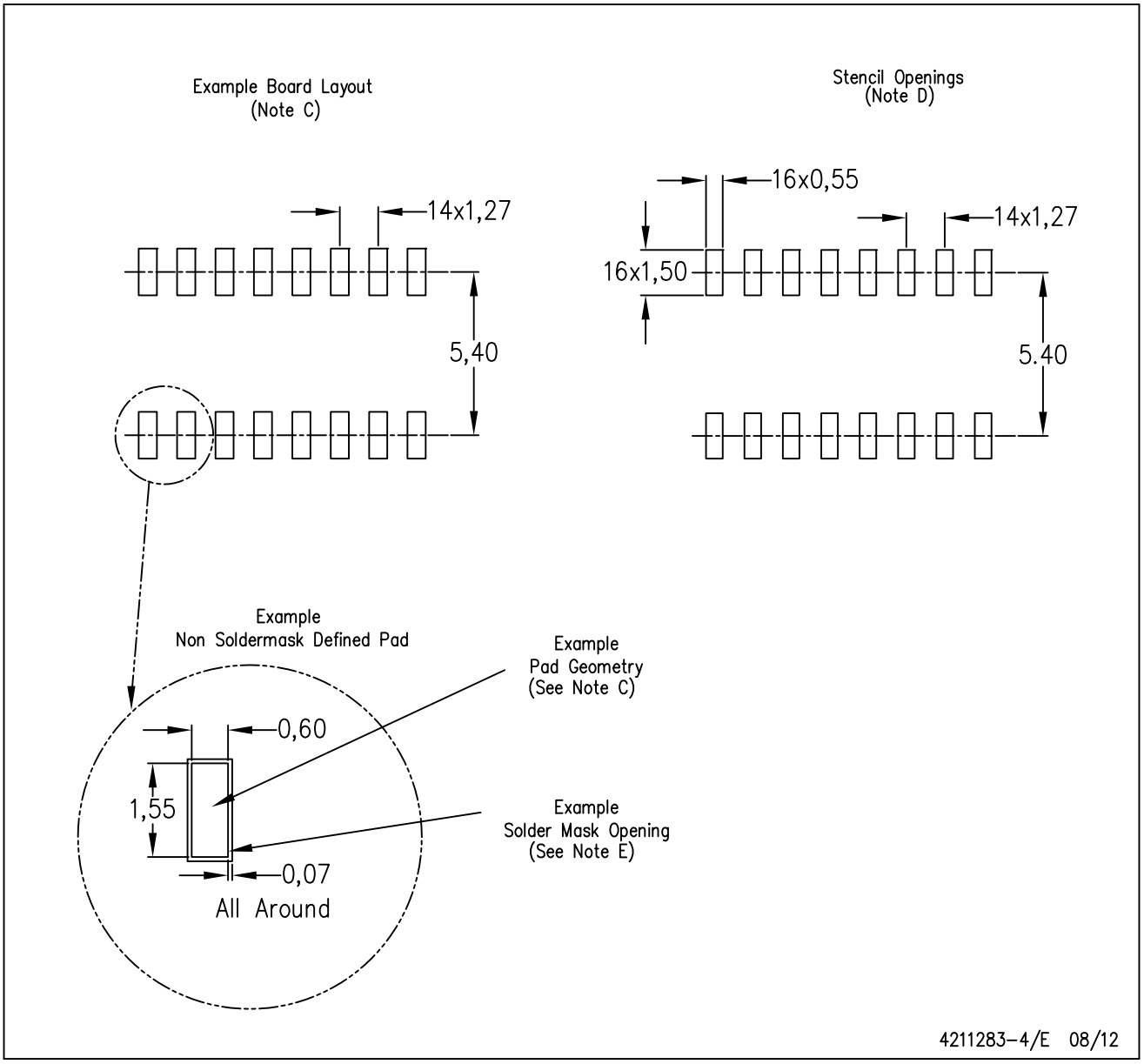

NOTES:
A. All linear dimensions are in millimeters.
B. This drawing is subject to change without notice.
C. Publication IPC–7351 is recommended for alternate designs.
D. Laser cutting apertures with trapezoidal walls and also rounding corners will offer better paste release. Customers should contact their board assembly site for stencil design recommendations. Refer to IPC–7525 for other stencil recommendations.
E. Customers should contact their board fabrication site for solder mask tolerances between and around signal pads.

IMPORTANT NOTICE AND DISCLAIMER

TI PROVIDES TECHNICAL AND RELIABILITY DATA (INCLUDING DATASHEETS), DESIGN RESOURCES (INCLUDING REFERENCE DESIGNS), APPLICATION OR OTHER DESIGN ADVICE, WEB TOOLS, SAFETY INFORMATION, AND OTHER RESOURCES “AS IS” AND WITH ALL FAULTS, AND DISCLAIMS ALL WARRANTIES, EXPRESS AND IMPLIED, INCLUDING WITHOUT LIMITATION ANY IMPLIED WARRANTIES OF MERCHANTABILITY, FITNESS FOR A PARTICULAR PURPOSE OR NON-INFRINGEMENT OF THIRD PARTY INTELLECTUAL PROPERTY RIGHTS.

These resources are intended for skilled developers designing with TI products. You are solely responsible for (1) selecting the appropriate TI products for your application, (2) designing, validating and testing your application, and (3) ensuring your application meets applicable standards, and any other safety, security, or other requirements. These resources are subject to change without notice. TI grants you permission to use these resources only for development of an application that uses the TI products described in the resource. Other reproduction and display of these resources is prohibited. No license is granted to any other TI intellectual property right or to any third party intellectual property right. TI disclaims responsibility for, and you will fully indemnify TI and its representatives against, any claims, damages, costs, losses, and liabilities arising out of your use of these resources.

TI’s products are provided subject to TI’s Terms of Sale (www.ti.com/legal/termsofsale.html) or other applicable terms available either on ti.com or provided in conjunction with such TI products. TI’s provision of these resources does not expand or otherwise alter TI’s applicable warranties or warranty disclaimers for TI products.

Mailing Address: Texas Instruments, Post Office Box 655303, Dallas, Texas 75265
Copyright © 2019, Texas Instruments Incorporated