- **'LS377 and 'LS378 Contain Eight and Six Flip-Flops, Respectively, with Single-Rail Outputs**
- **'LS379 Contains Four Flip-Flops with Double-Rail Outputs**
- **Individual Data Input to Each Flip-Flop**
- **Applications Include:**
  - **Buffer/Storage Registers**
  - **Shift Registers**
  - **Pattern Generators**

SN54LS377 . . . J PACKAGE
SN74LS377 . . . DW OR N PACKAGE
(TOP VIEW)

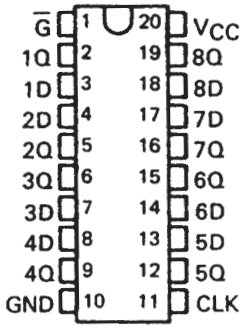

SN54LS377 . . . FK PACKAGE
(TOP VIEW)

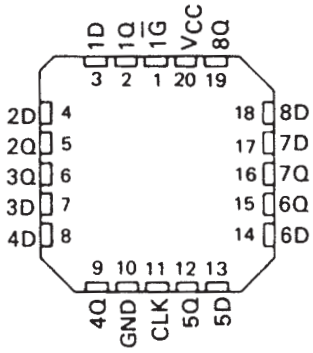

SN54LS378 . . . J OR W PACKAGE
SN74LS378 . . . D OR N PACKAGE
(TOP VIEW)

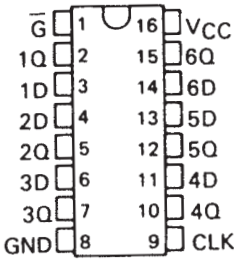

SN54LS378 . . . FK PACKAGE
(TOP VIEW)

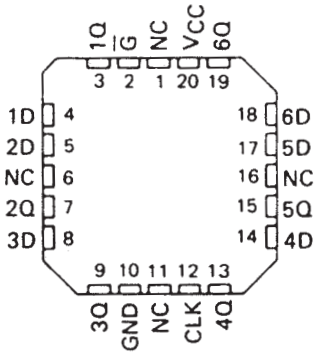

NC – No internal connection

description

These monolithic, positive-edge-triggered flip-flops utilize TTL circuitry to implement D-type flip-flop logic with an enable input. The 'LS377, 'LS378, and 'LS379 devices are similar to 'LS273, 'LS174, and 'LS175, respectively, but feature a common enable instead of a common clear.

Information at the D inputs meeting the setup time requirements is transferred to the Q outputs on the positive-going edge of the clock pulse if the enable input $\overline{G}$ is low. Clock triggering occurs at a particular voltage level and is not directly related to the transition time of the positive-going pulse. When the clock input is at either the high or low level, the D input signal has no effect at the output. The circuits are designed to prevent false clocking by transitions at the $\overline{G}$ input.

These flip-flops are guaranteed to respond to clock frequencies ranging from 0 to 30 MHz while maximum clock frequency is typically 40 megahertz. Typical power dissipation is 10 milliwatts per flip-flop.

FUNCTION TABLE
(EACH FLIP-FLOP)

INPUTS			OUTPUTS	
$\overline{G}$	CLOCK	DATA	Q	$\overline{Q}$
H	X	X	Q_0	$\overline{Q}_0$
L	↑	H	H	L
L	↑	L	L	H
X	L	X	Q_0	$\overline{Q}_0$

PRODUCTION DATA information is current as of publication date. Products conform to specifications per the terms of Texas Instruments standard warranty. Production processing does not necessarily include testing of all parameters.

Copyright © 1988, Texas Instruments Incorporated

SN54LS379 . . . J OR W PACKAGE
SN74LS379 . . . D OR N PACKAGE
(TOP VIEW)

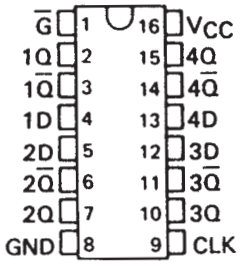

SN54LS379 . . . FK PACKAGE
(TOP VIEW)

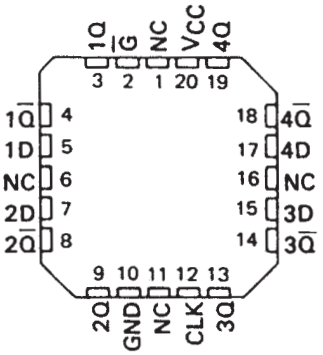

NC – No internal connection

logic diagram (positive logic)

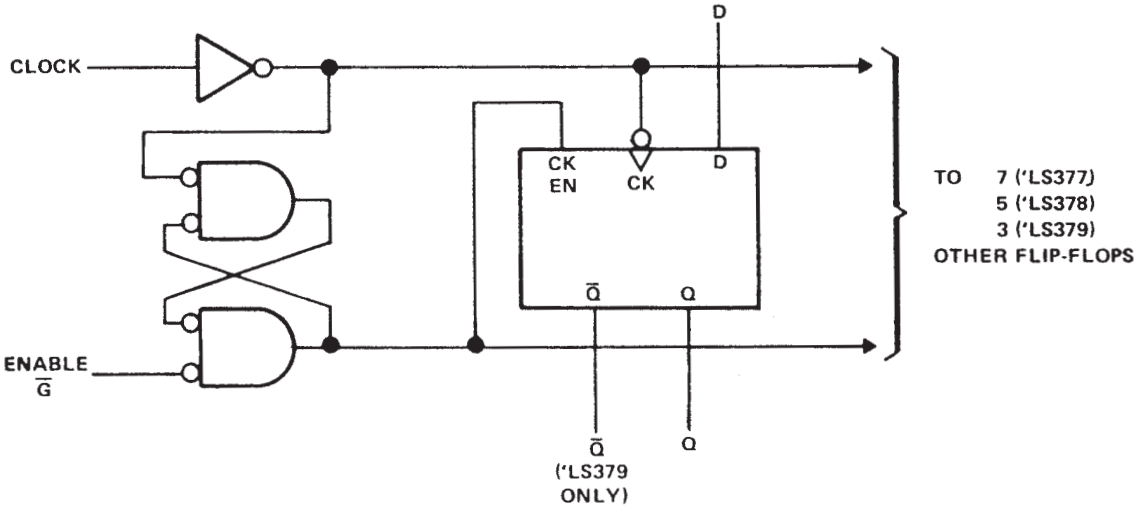

logic symbols†

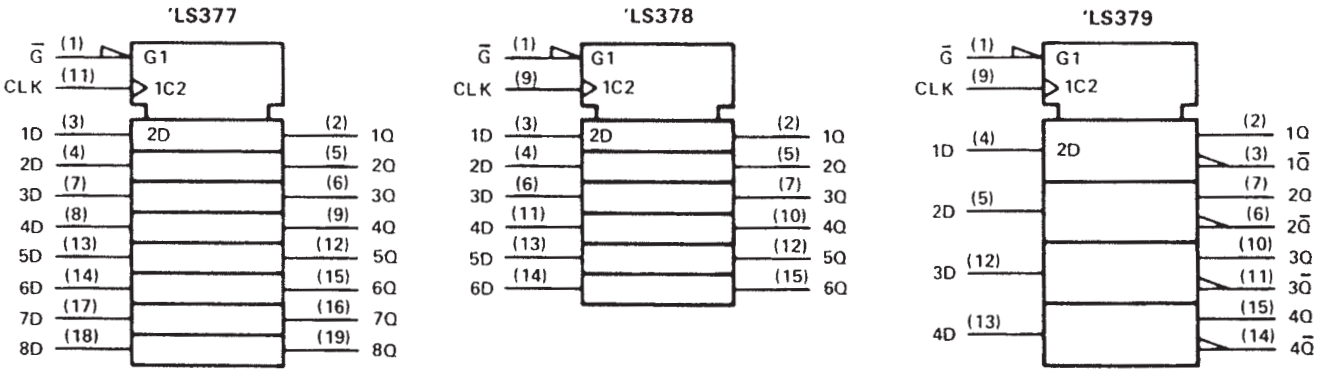

† These symbols are in accordance with ANSI/IEEE Std 91-1984 and IEC Publication 617-12.
Pin numbers shown are for DW, J, and N packages.

schematics of inputs and outputs

EQUIVALENT OF DATA INPUT

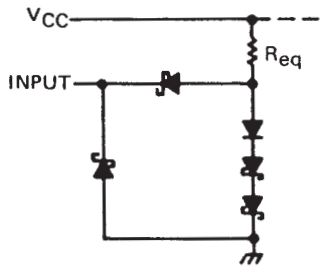

'LS379 : R_{eq} = 30 kΩ NOM
others : R_{eq} = 25 kΩ NOM

EQUIVALENT OF CLOCK INPUTS

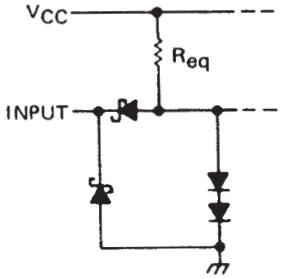

'LS379 :R_{eq} = 17 kΩ NOM
others :R_{eq} = 20 kΩ NOM

EQUIVALENT OF ENABLE INPUTS

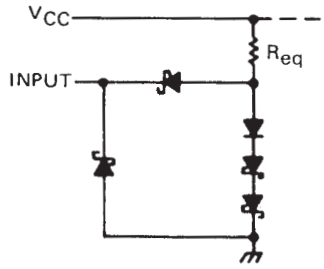

'LS379 :R_{eq} = 25 kΩ NOM
others :R_{eq} = 20 kΩ NOM

TYPICAL OF ALL OUTPUTS

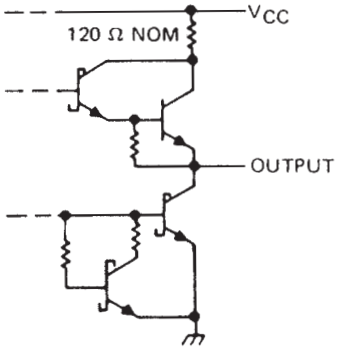

absolute maximum rating over operating free-air temperature range (unless otherwise noted)

Supply voltage, V_{CC} (see Note 1)		7 V
Input voltage		7 V
Operating free-air temperature range:	SN54LS'	–55°C to 125°C
	SN74LS'	0°C to 70°C
Storage temperature range		–65°C to 150°C

NOTE 1: Voltage values are with respect to network ground terminal.

recommended operating conditions

		SN54LS'			SN74LS'			UNIT
		MIN	NOM	MAX	MIN	NOM	MAX	
Supply voltage, V_{CC}		4.5	5	5.5	4.75	5	5.25	V
High-level output current, I_{OH}				–400			–400	μA
Low-level output current, I_{OL}				4			8	mA
Clock frequency, f_{clock}		0		30	0		30	MHz
Width of clock pulse, t_w		20			20			ns
Setup time, t_{su}	Data input	20↑			20↑			ns
	Enable active-state	25↑			25↑			
	Enable inactive-state	10↑			10↑			
Hold time, t_h	Data and enable	5↑			5↑			ns
Operating free-air temperature, T_A		–55		125	0		70	°C

↑The arrow indicates that the rising edge of the clock pulse is used for reference.

electrical characteristics over recommended operating free-air temperature range (unless otherwise noted)

PARAMETER		TEST CONDITIONS†			SN54LS'			SN74LS'			UNIT
					MIN	TYP‡	MAX	MIN	TYP‡	MAX	
V_{IH}	High-level input voltage				2			2			V
V_{IL}	Low-level input voltage						0.7			0.8	V
V_{IK}	Input clamp voltage	V_{CC} = MIN,	I_I = –18 mA				–1.5			–1.5	V
V_{OH}	High-level output voltage	V_{CC} = MIN,	V_{IH} = 2 V,		2.5	3.5		2.7	3.5		V
		V_{IL} = V_{IL} max,	I_{OH} = –400 μA								
V_{OL}	Low-level output voltage	V_{CC} = MIN,	V_{IH} = 2 V,	I_{OL} = 4 mA		0.25	0.4		0.25	0.4	V
		V_{IL} = V_{IL} max		I_{OL} = 8 mA					0.35	0.5	
I_I	Input current at maximum input voltage	V_{CC} = MAX,	V_I = 7 V				0.1			0.1	mA
I_{IH}	High-level input current	V_{CC} = MAX,	V_I = 2.7 V				20			20	μA
I_{IL}	Low-level input current	V_{CC} = MAX,	V_I = 0.4 V				–0.4			–0.4	mA
I_{OS}	Short-circuit output current§	V_{CC} = MAX			–20		–100	–20		–100	mA
I_{CC}	Supply current	V_{CC} = MAX,	See Note 2	'LS377		17	28		17	28	mA
				'LS378		13	22		13	22	mA
				'LS379		9	15		9	15	mA

† For conditions shown as MIN or MAX, use the appropriate value specified under recommended operating conditions.
‡ All typical values are at V_{CC} = 5 V, T_A = 25°C.
§ Note more than one input should be shorted at a time, and duration of the short-circuit should not exceed one second.
NOTE 2: With all outputs open and ground applied to all data and enable inputs, I_{CC} is measured after a momentary ground, then 4.5 V, is applied to clock.

switching characteristics, V_{CC} = 5 V, T_A = 25°C

PARAMETER		TEST CONDITIONS	MIN	TYP	MAX	UNIT
f_{max}	Maximum clock frequency	C_L = 15 pF,	30	40		MHz
t_{PLH}	Propagation delay time, low-to-high-level output from clock	R_L = 2 kΩ		17	27	ns
t_{PHL}	Propagation delay time, high-to-low-level output from clock	See Note 3		18	27	ns

NOTE 3: Load circuits and voltage waveforms are shown in Section 1.

PACKAGING INFORMATION

Orderable Device	Status (1)	Package Type	Package Drawing	Pins	Package Qty	Eco Plan (2)	Lead/Ball Finish (6)	MSL Peak Temp (3)	Op Temp (°C)	Device Marking (4/5)	Samples
5962-8992501EA	ACTIVE	CDIP	J	16	1	TBD	A42	N / A for Pkg Type	-55 to 125	5962-8992501EA SNJ54LS378J	Samples
JM38510/32504BRA	ACTIVE	CDIP	J	20	1	TBD	A42	N / A for Pkg Type	-55 to 125	JM38510/ 32504BRA	Samples
JM38510/32504BRA	ACTIVE	CDIP	J	20	1	TBD	A42	N / A for Pkg Type	-55 to 125	JM38510/ 32504BRA	Samples
JM38510/32504BSA	ACTIVE	CFP	W	20	1	TBD	A42	N / A for Pkg Type	-55 to 125	JM38510/ 32504BSA	Samples
JM38510/32504BSA	ACTIVE	CFP	W	20	1	TBD	A42	N / A for Pkg Type	-55 to 125	JM38510/ 32504BSA	Samples
M38510/32504BRA	ACTIVE	CDIP	J	20	1	TBD	A42	N / A for Pkg Type	-55 to 125	JM38510/ 32504BRA	Samples
M38510/32504BRA	ACTIVE	CDIP	J	20	1	TBD	A42	N / A for Pkg Type	-55 to 125	JM38510/ 32504BRA	Samples
M38510/32504BSA	ACTIVE	CFP	W	20	1	TBD	A42	N / A for Pkg Type	-55 to 125	JM38510/ 32504BSA	Samples
M38510/32504BSA	ACTIVE	CFP	W	20	1	TBD	A42	N / A for Pkg Type	-55 to 125	JM38510/ 32504BSA	Samples
SN54LS377J	ACTIVE	CDIP	J	20	1	TBD	A42	N / A for Pkg Type	-55 to 125	SN54LS377J	Samples
SN54LS377J	ACTIVE	CDIP	J	20	1	TBD	A42	N / A for Pkg Type	-55 to 125	SN54LS377J	Samples
SN54LS378J	ACTIVE	CDIP	J	16	1	TBD	A42	N / A for Pkg Type	-55 to 125	SN54LS378J	Samples
SN54LS378J	ACTIVE	CDIP	J	16	1	TBD	A42	N / A for Pkg Type	-55 to 125	SN54LS378J	Samples
SN54LS379J	ACTIVE	CDIP	J	16	1	TBD	A42	N / A for Pkg Type	-55 to 125	SN54LS379J	Samples
SN54LS379J	ACTIVE	CDIP	J	16	1	TBD	A42	N / A for Pkg Type	-55 to 125	SN54LS379J	Samples
SN74LS377DW	ACTIVE	SOIC	DW	20	25	Green (RoHS & no Sb/Br)	CU NIPDAU	Level-1-260C-UNLIM	0 to 70	LS377	Samples
SN74LS377DW	ACTIVE	SOIC	DW	20	25	Green (RoHS & no Sb/Br)	CU NIPDAU	Level-1-260C-UNLIM	0 to 70	LS377	Samples
SN74LS377DWR	ACTIVE	SOIC	DW	20	2000	Green (RoHS & no Sb/Br)	CU NIPDAU	Level-1-260C-UNLIM	0 to 70	LS377	Samples

Orderable Device	Status (1)	Package Type	Package Drawing	Pins	Package Qty	Eco Plan (2)	Lead/Ball Finish (6)	MSL Peak Temp (3)	Op Temp (°C)	Device Marking (4/5)	Samples
SN74LS377DWR	ACTIVE	SOIC	DW	20	2000	Green (RoHS & no Sb/Br)	CU NIPDAU	Level-1-260C-UNLIM	0 to 70	LS377	Samples
SN74LS377N	ACTIVE	PDIP	N	20	20	Pb-Free (RoHS)	CU NIPDAU	N / A for Pkg Type	0 to 70	SN74LS377N	Samples
SN74LS377N	ACTIVE	PDIP	N	20	20	Pb-Free (RoHS)	CU NIPDAU	N / A for Pkg Type	0 to 70	SN74LS377N	Samples
SN74LS377NE4	ACTIVE	PDIP	N	20	20	Pb-Free (RoHS)	CU NIPDAU	N / A for Pkg Type	0 to 70	SN74LS377N	Samples
SN74LS377NE4	ACTIVE	PDIP	N	20	20	Pb-Free (RoHS)	CU NIPDAU	N / A for Pkg Type	0 to 70	SN74LS377N	Samples
SN74LS377NSR	ACTIVE	SO	NS	20	2000	Green (RoHS & no Sb/Br)	CU NIPDAU	Level-1-260C-UNLIM	0 to 70	74LS377	Samples
SN74LS377NSR	ACTIVE	SO	NS	20	2000	Green (RoHS & no Sb/Br)	CU NIPDAU	Level-1-260C-UNLIM	0 to 70	74LS377	Samples
SN74LS378D	ACTIVE	SOIC	D	16	40	Green (RoHS & no Sb/Br)	CU NIPDAU	Level-1-260C-UNLIM	0 to 70	LS378	Samples
SN74LS378D	ACTIVE	SOIC	D	16	40	Green (RoHS & no Sb/Br)	CU NIPDAU	Level-1-260C-UNLIM	0 to 70	LS378	Samples
SN74LS378DR	ACTIVE	SOIC	D	16	2500	Green (RoHS & no Sb/Br)	CU NIPDAU	Level-1-260C-UNLIM	0 to 70	LS378	Samples
SN74LS378DR	ACTIVE	SOIC	D	16	2500	Green (RoHS & no Sb/Br)	CU NIPDAU	Level-1-260C-UNLIM	0 to 70	LS378	Samples
SN74LS378N	ACTIVE	PDIP	N	16	25	Green (RoHS & no Sb/Br)	CU NIPDAU	N / A for Pkg Type	0 to 70	SN74LS378N	Samples
SN74LS378N	ACTIVE	PDIP	N	16	25	Green (RoHS & no Sb/Br)	CU NIPDAU	N / A for Pkg Type	0 to 70	SN74LS378N	Samples
SNJ54LS377J	ACTIVE	CDIP	J	20	1	TBD	A42	N / A for Pkg Type	-55 to 125	SNJ54LS377J	Samples
SNJ54LS377J	ACTIVE	CDIP	J	20	1	TBD	A42	N / A for Pkg Type	-55 to 125	SNJ54LS377J	Samples
SNJ54LS377W	ACTIVE	CFP	W	20	1	TBD	A42	N / A for Pkg Type	-55 to 125	SNJ54LS377W	Samples
SNJ54LS377W	ACTIVE	CFP	W	20	1	TBD	A42	N / A for Pkg Type	-55 to 125	SNJ54LS377W	Samples
SNJ54LS378J	ACTIVE	CDIP	J	16	1	TBD	A42	N / A for Pkg Type	-55 to 125	5962-8992501EA SNJ54LS378J	Samples
SNJ54LS378J	ACTIVE	CDIP	J	16	1	TBD	A42	N / A for Pkg Type	-55 to 125	5962-8992501EA	Samples

Orderable Device	Status (1)	Package Type	Package Drawing	Pins	Package Qty	Eco Plan (2)	Lead/Ball Finish (6)	MSL Peak Temp (3)	Op Temp (°C)	Device Marking (4/5)	Samples
										SNJ54LS378J	
SNJ54LS379FK	ACTIVE	LCCC	FK	20	1	TBD	POST-PLATE	N / A for Pkg Type	-55 to 125	SNJ54LS 379FK	Samples
SNJ54LS379FK	ACTIVE	LCCC	FK	20	1	TBD	POST-PLATE	N / A for Pkg Type	-55 to 125	SNJ54LS 379FK	Samples
SNJ54LS379J	ACTIVE	CDIP	J	16	1	TBD	A42	N / A for Pkg Type	-55 to 125	SNJ54LS379J	Samples
SNJ54LS379J	ACTIVE	CDIP	J	16	1	TBD	A42	N / A for Pkg Type	-55 to 125	SNJ54LS379J	Samples

(1) The marketing status values are defined as follows:
ACTIVE: Product device recommended for new designs.
LIFEBUY: TI has announced that the device will be discontinued, and a lifetime-buy period is in effect.
NRND: Not recommended for new designs. Device is in production to support existing customers, but TI does not recommend using this part in a new design.
PREVIEW: Device has been announced but is not in production. Samples may or may not be available.
OBSOLETE: TI has discontinued the production of the device.

(2) **RoHS:** TI defines "RoHS" to mean semiconductor products that are compliant with the current EU RoHS requirements for all 10 RoHS substances, including the requirement that RoHS substance do not exceed 0.1% by weight in homogeneous materials. Where designed to be soldered at high temperatures, "RoHS" products are suitable for use in specified lead-free processes. TI may reference these types of products as "Pb-Free".
RoHS Exempt: TI defines "RoHS Exempt" to mean products that contain lead but are compliant with EU RoHS pursuant to a specific EU RoHS exemption.
Green: TI defines "Green" to mean the content of Chlorine (Cl) and Bromine (Br) based flame retardants meet JS709B low halogen requirements of <=1000ppm threshold. Antimony trioxide based flame retardants must also meet the <=1000ppm threshold requirement.

(3) MSL, Peak Temp. - The Moisture Sensitivity Level rating according to the JEDEC industry standard classifications, and peak solder temperature.

(4) There may be additional marking, which relates to the logo, the lot trace code information, or the environmental category on the device.

(5) Multiple Device Markings will be inside parentheses. Only one Device Marking contained in parentheses and separated by a "~" will appear on a device. If a line is indented then it is a continuation of the previous line and the two combined represent the entire Device Marking for that device.

(6) Lead/Ball Finish - Orderable Devices may have multiple material finish options. Finish options are separated by a vertical ruled line. Lead/Ball Finish values may wrap to two lines if the finish value exceeds the maximum column width.

Important Information and Disclaimer: The information provided on this page represents TI's knowledge and belief as of the date that it is provided. TI bases its knowledge and belief on information provided by third parties, and makes no representation or warranty as to the accuracy of such information. Efforts are underway to better integrate information from third parties. TI has taken and continues to take reasonable steps to provide representative and accurate information but may not have conducted destructive testing or chemical analysis on incoming materials and chemicals. TI and TI suppliers consider certain information to be proprietary, and thus CAS numbers and other limited information may not be available for release.

In no event shall TI's liability arising out of such information exceed the total purchase price of the TI part(s) at issue in this document sold by TI to Customer on an annual basis.

OTHER QUALIFIED VERSIONS OF SN54LS377, SN54LS378, SN74LS377, SN74LS378 :

- Catalog: SN74LS377, SN74LS378
- Military: SN54LS377, SN54LS378

NOTE: Qualified Version Definitions:

- Catalog - TI's standard catalog product
- Military - QML certified for Military and Defense Applications

TAPE AND REEL INFORMATION

REEL DIMENSIONS

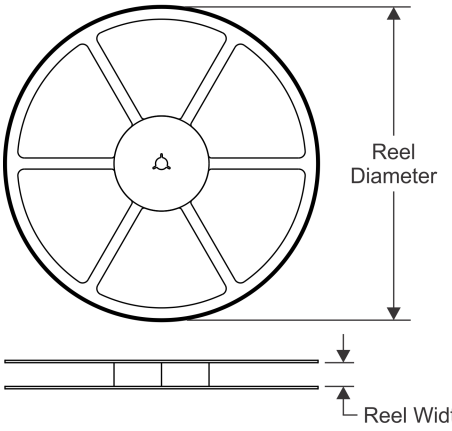

TAPE DIMENSIONS

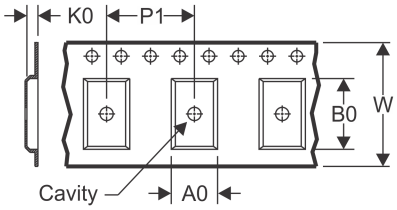

A0	Dimension designed to accommodate the component width
B0	Dimension designed to accommodate the component length
K0	Dimension designed to accommodate the component thickness
W	Overall width of the carrier tape
P1	Pitch between successive cavity centers

QUADRANT ASSIGNMENTS FOR PIN 1 ORIENTATION IN TAPE

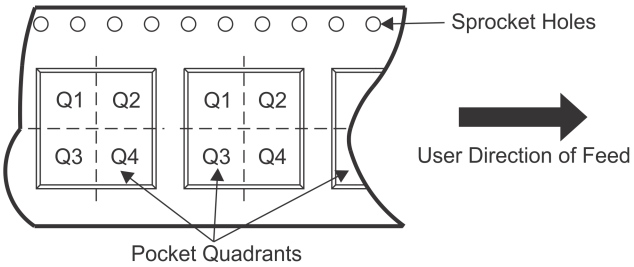

*All dimensions are nominal

Device	Package Type	Package Drawing	Pins	SPQ	Reel Diameter (mm)	Reel Width W1 (mm)	A0 (mm)	B0 (mm)	K0 (mm)	P1 (mm)	W (mm)	Pin1 Quadrant
SN74LS377DWR	SOIC	DW	20	2000	330.0	24.4	10.8	13.3	2.7	12.0	24.0	Q1
SN74LS377NSR	SO	NS	20	2000	330.0	24.4	8.4	13.0	2.5	12.0	24.0	Q1
SN74LS378DR	SOIC	D	16	2500	330.0	16.4	6.5	10.3	2.1	8.0	16.0	Q1

TAPE AND REEL BOX DIMENSIONS

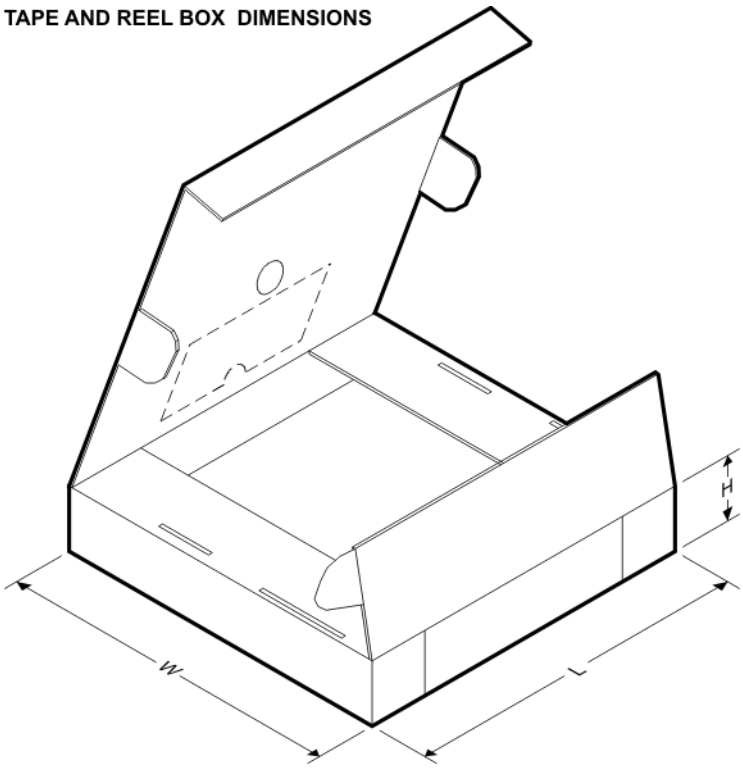

*All dimensions are nominal

Device	Package Type	Package Drawing	Pins	SPQ	Length (mm)	Width (mm)	Height (mm)
SN74LS377DWR	SOIC	DW	20	2000	367.0	367.0	45.0
SN74LS377NSR	SO	NS	20	2000	367.0	367.0	45.0
SN74LS378DR	SOIC	D	16	2500	333.2	345.9	28.6

FK (S–CQCC–N**) LEADLESS CERAMIC CHIP CARRIER

28 TERMINAL SHOWN

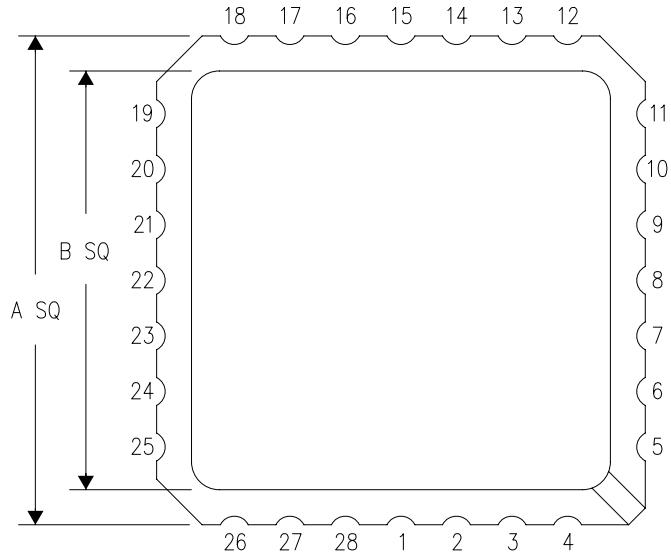

NO. OF TERMINALS **	A		B	
	MIN	MAX	MIN	MAX
20	0.342 (8,69)	0.358 (9,09)	0.307 (7,80)	0.358 (9,09)
28	0.442 (11,23)	0.458 (11,63)	0.406 (10,31)	0.458 (11,63)
44	0.640 (16,26)	0.660 (16,76)	0.495 (12,58)	0.560 (14,22)
52	0.740 (18,78)	0.761 (19,32)	0.495 (12,58)	0.560 (14,22)
68	0.938 (23,83)	0.962 (24,43)	0.850 (21,6)	0.858 (21,8)
84	1.141 (28,99)	1.165 (29,59)	1.047 (26,6)	1.063 (27,0)

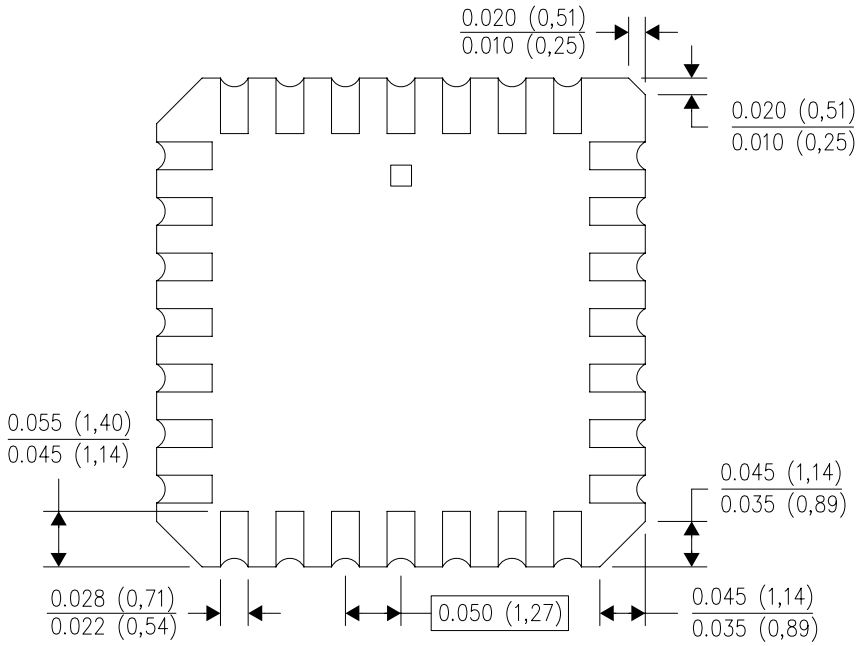

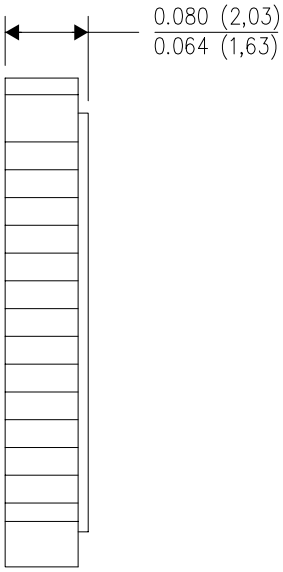

4040140/D 01/11

NOTES:
A. All linear dimensions are in inches (millimeters).
B. This drawing is subject to change without notice.
C. This package can be hermetically sealed with a metal lid.
D. Falls within JEDEC MS–004

D (R–PDSO–G16) PLASTIC SMALL OUTLINE

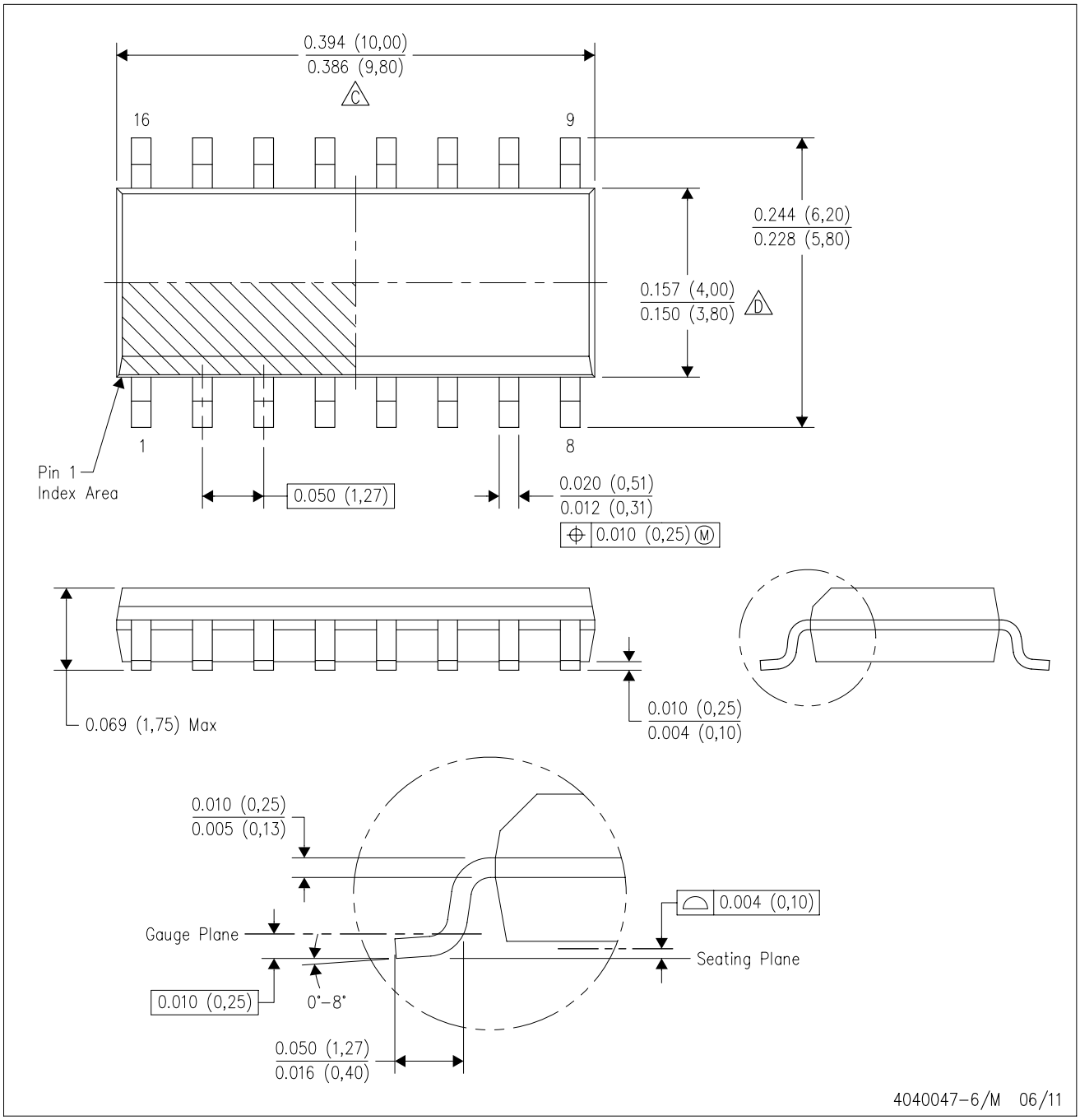

NOTES:
A. All linear dimensions are in inches (millimeters).
B. This drawing is subject to change without notice.
C. Body length does not include mold flash, protrusions, or gate burrs. Mold flash, protrusions, or gate burrs shall not exceed 0.006 (0,15) each side.
D. Body width does not include interlead flash. Interlead flash shall not exceed 0.017 (0,43) each side.
E. Reference JEDEC MS–012 variation AC.

D (R–PDSO–G16) PLASTIC SMALL OUTLINE

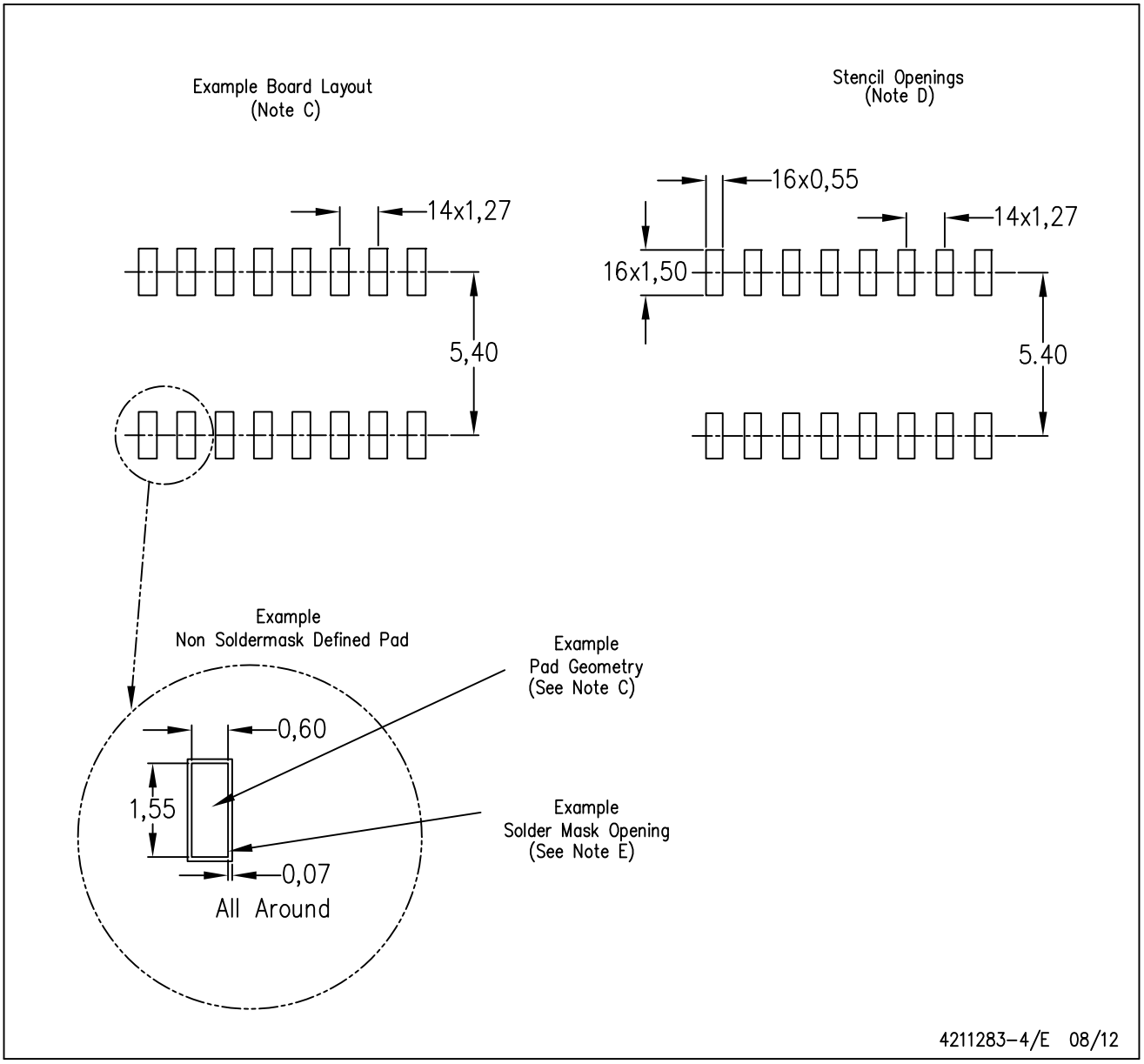

NOTES:
A. All linear dimensions are in millimeters.
B. This drawing is subject to change without notice.
C. Publication IPC–7351 is recommended for alternate designs.
D. Laser cutting apertures with trapezoidal walls and also rounding corners will offer better paste release. Customers should contact their board assembly site for stencil design recommendations. Refer to IPC–7525 for other stencil recommendations.
E. Customers should contact their board fabrication site for solder mask tolerances between and around signal pads.

MECHANICAL DATA

NS (R-PDSO-G)** **PLASTIC SMALL-OUTLINE PACKAGE**

14-PINS SHOWN

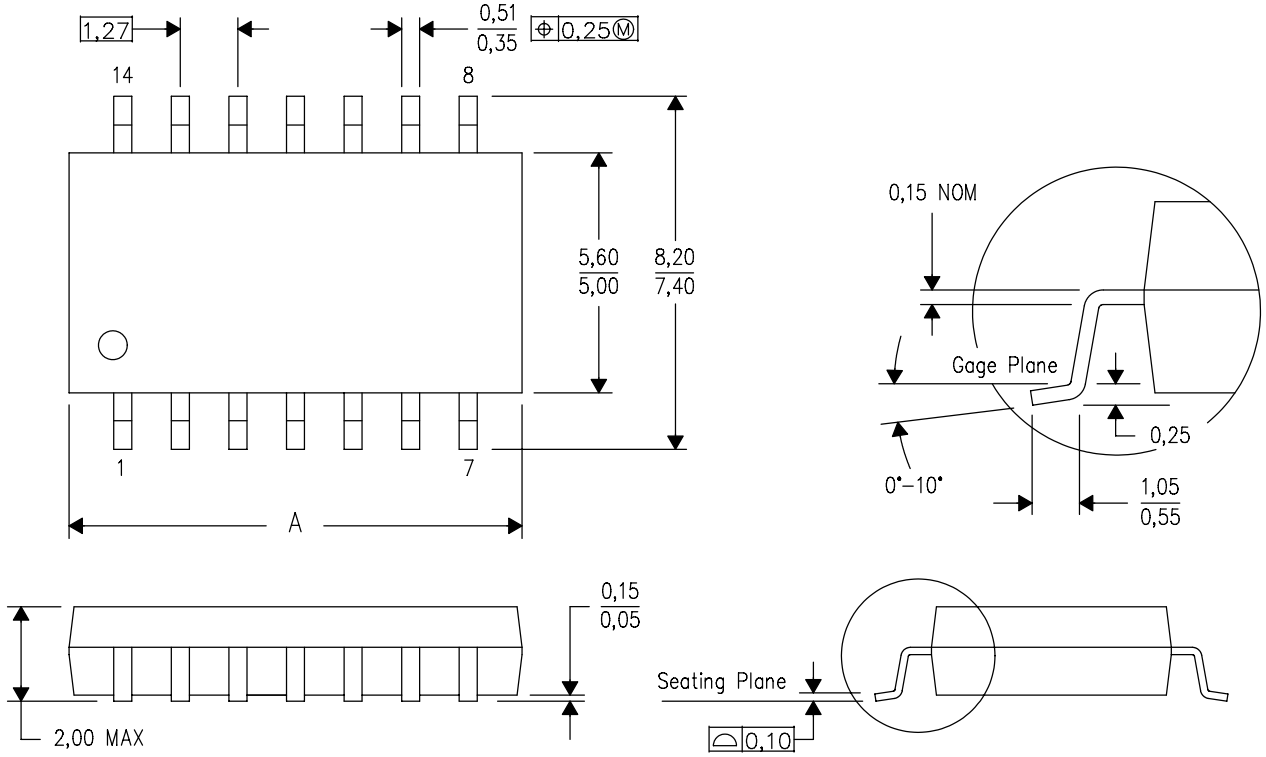

DIM \ PINS **	14	16	20	24
A MAX	10,50	10,50	12,90	15,30
A MIN	9,90	9,90	12,30	14,70

4040062/C 03/03

NOTES:
A. All linear dimensions are in millimeters.
B. This drawing is subject to change without notice.
C. Body dimensions do not include mold flash or protrusion, not to exceed 0,15.

J (R–GDIP–T**) CERAMIC DUAL IN–LINE PACKAGE

14 LEADS SHOWN

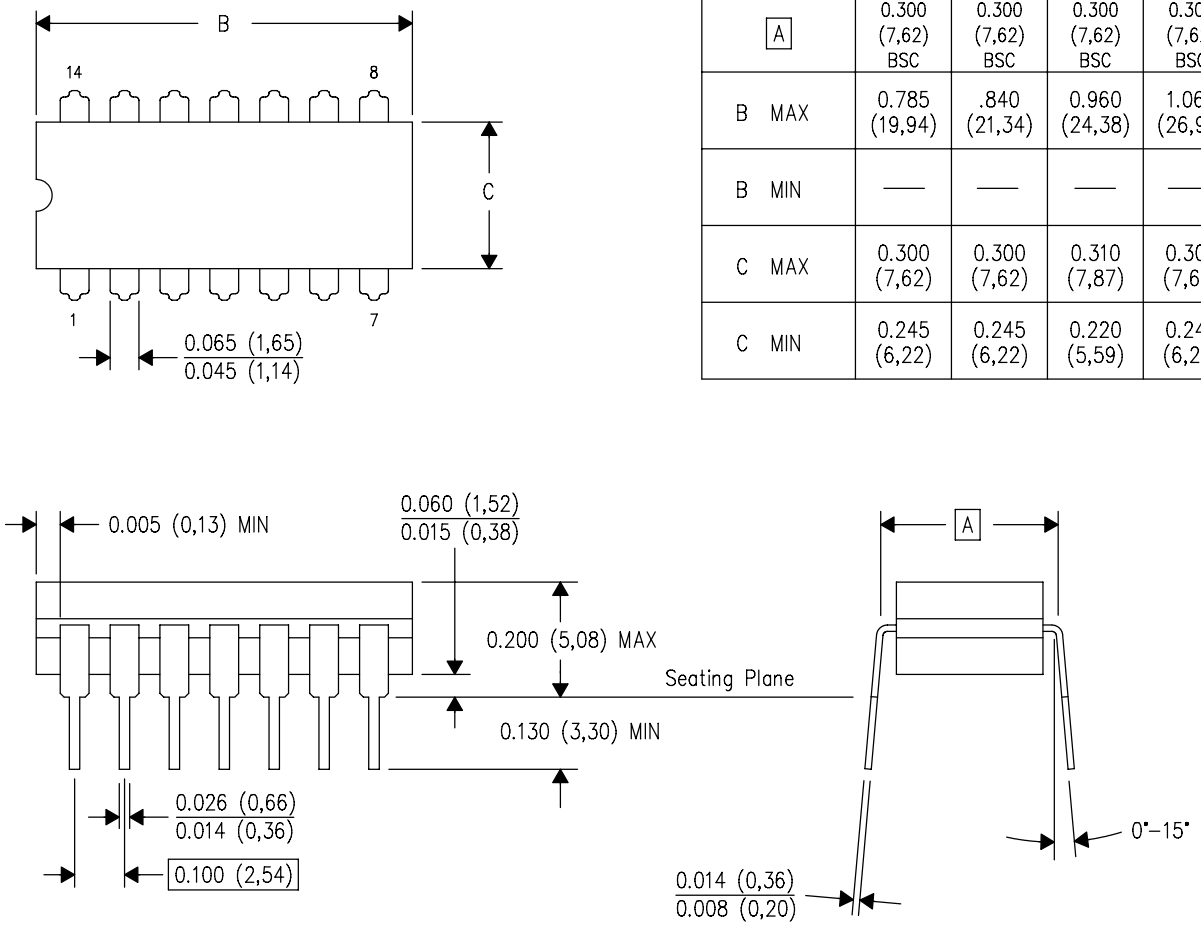

DIM \ PINS **	14	16	18	20
A	0.300 (7,62) BSC	0.300 (7,62) BSC	0.300 (7,62) BSC	0.300 (7,62) BSC
B MAX	0.785 (19,94)	.840 (21,34)	0.960 (24,38)	1.060 (26,92)
B MIN	—	—	—	—
C MAX	0.300 (7,62)	0.300 (7,62)	0.310 (7,87)	0.300 (7,62)
C MIN	0.245 (6,22)	0.245 (6,22)	0.220 (5,59)	0.245 (6,22)

4040083/F 03/03

NOTES:
- A. All linear dimensions are in inches (millimeters).
- B. This drawing is subject to change without notice.
- C. This package is hermetically sealed with a ceramic lid using glass frit.
- D. Index point is provided on cap for terminal identification only on press ceramic glass frit seal only.
- E. Falls within MIL STD 1835 GDIP1–T14, GDIP1–T16, GDIP1–T18 and GDIP1–T20.

J (R–GDIP–T**) CERAMIC DUAL IN–LINE PACKAGE

14 LEADS SHOWN

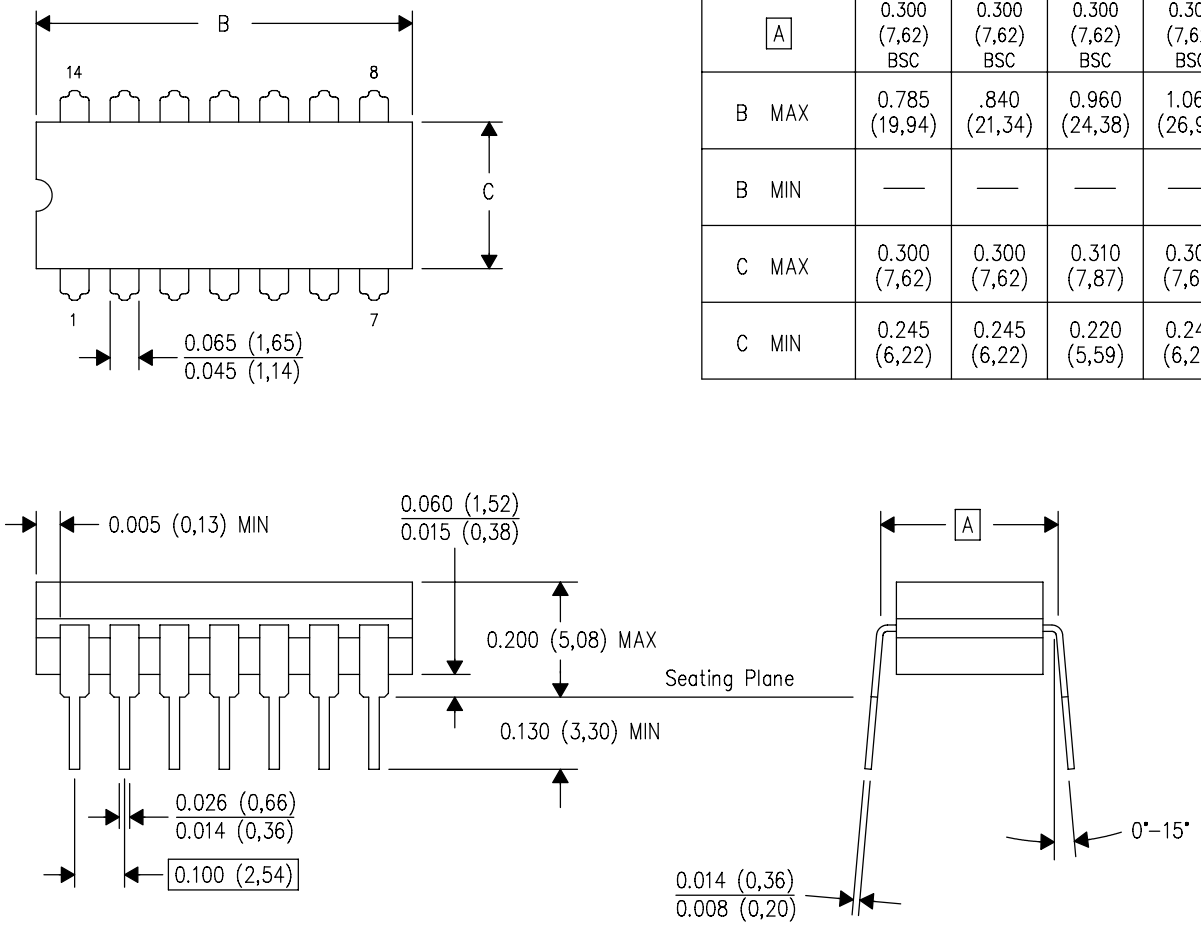

DIM \ PINS **	14	16	18	20
A	0.300 (7,62) BSC	0.300 (7,62) BSC	0.300 (7,62) BSC	0.300 (7,62) BSC
B MAX	0.785 (19,94)	.840 (21,34)	0.960 (24,38)	1.060 (26,92)
B MIN	—	—	—	—
C MAX	0.300 (7,62)	0.300 (7,62)	0.310 (7,87)	0.300 (7,62)
C MIN	0.245 (6,22)	0.245 (6,22)	0.220 (5,59)	0.245 (6,22)

4040083/F 03/03

NOTES:
- A. All linear dimensions are in inches (millimeters).
- B. This drawing is subject to change without notice.
- C. This package is hermetically sealed with a ceramic lid using glass frit.
- D. Index point is provided on cap for terminal identification only on press ceramic glass frit seal only.
- E. Falls within MIL STD 1835 GDIP1–T14, GDIP1–T16, GDIP1–T18 and GDIP1–T20.

N (R–PDIP–T**) PLASTIC DUAL–IN–LINE PACKAGE

16 PINS SHOWN

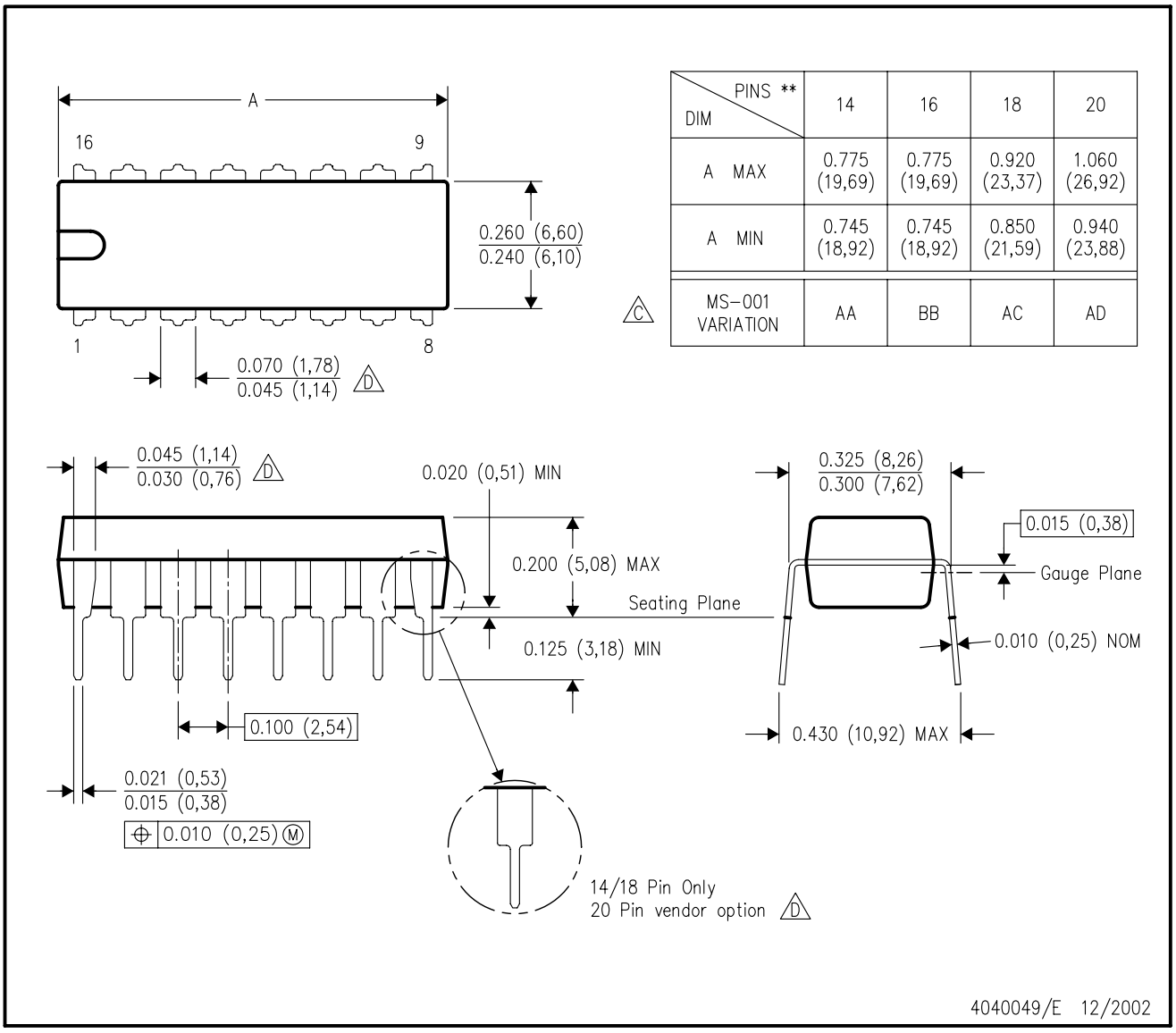

DIM \ PINS **	14	16	18	20
A MAX	0.775 (19,69)	0.775 (19,69)	0.920 (23,37)	1.060 (26,92)
A MIN	0.745 (18,92)	0.745 (18,92)	0.850 (21,59)	0.940 (23,88)
MS–001 VARIATION (C)	AA	BB	AC	AD

NOTES:
A. All linear dimensions are in inches (millimeters).
B. This drawing is subject to change without notice.
C. Falls within JEDEC MS–001, except 18 and 20 pin minimum body length (Dim A).
D. The 20 pin end lead shoulder width is a vendor option, either half or full width.

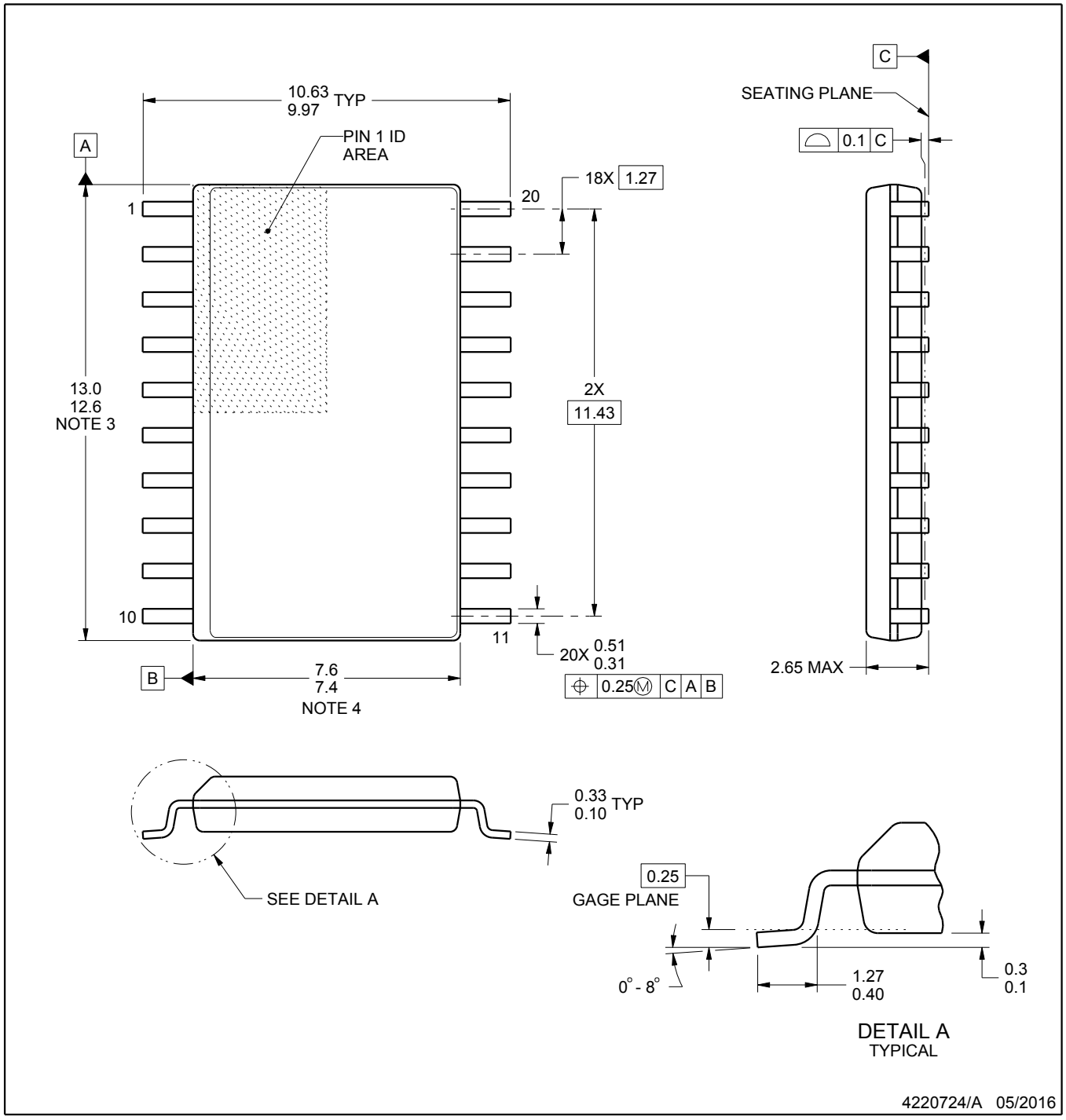

NOTES:

1. All linear dimensions are in millimeters. Dimensions in parenthesis are for reference only. Dimensioning and tolerancing per ASME Y14.5M.
2. This drawing is subject to change without notice.
3. This dimension does not include mold flash, protrusions, or gate burrs. Mold flash, protrusions, or gate burrs shall not exceed 0.15 mm per side.
4. This dimension does not include interlead flash. Interlead flash shall not exceed 0.43 mm per side.
5. Reference JEDEC registration MS-013.

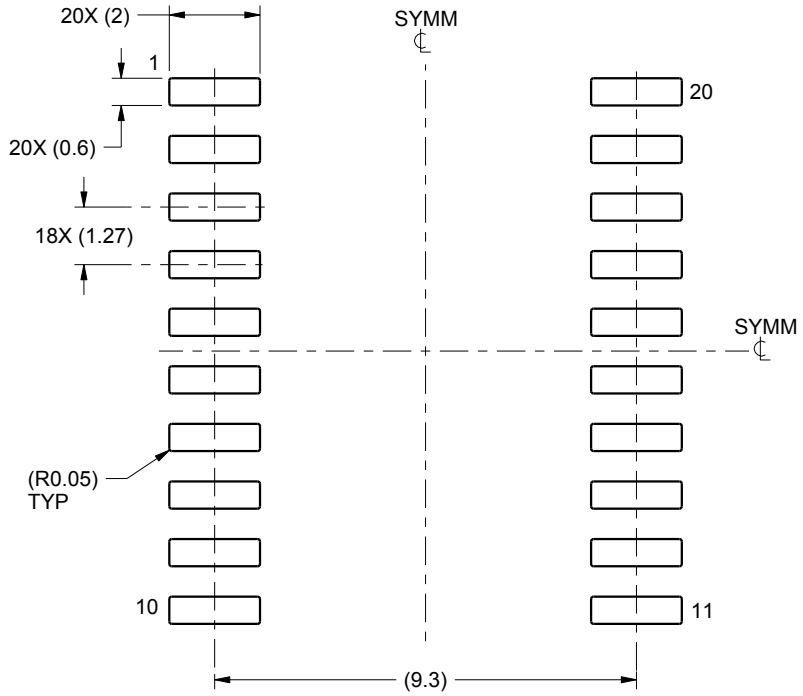

LAND PATTERN EXAMPLE
SCALE:6X

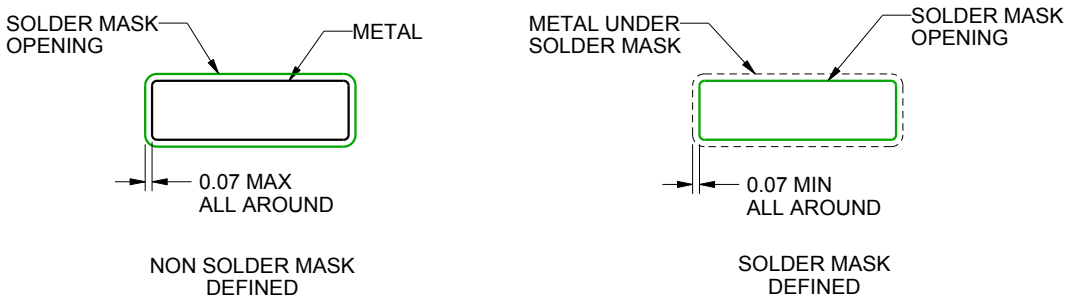

SOLDER MASK DETAILS

4220724/A 05/2016

NOTES: (continued)

6. Publication IPC-7351 may have alternate designs.
7. Solder mask tolerances between and around signal pads can vary based on board fabrication site.

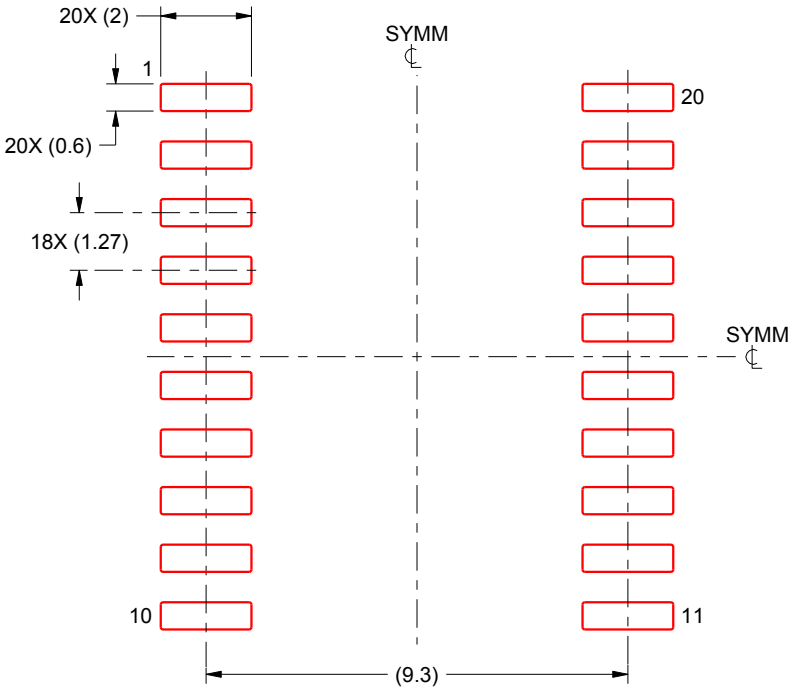

SOLDER PASTE EXAMPLE
BASED ON 0.125 mm THICK STENCIL
SCALE:6X

4220724/A 05/2016

NOTES: (continued)

8. Laser cutting apertures with trapezoidal walls and rounded corners may offer better paste release. IPC-7525 may have alternate design recommendations.
9. Board assembly site may have different recommendations for stencil design.

W (R–GDFP–F20) CERAMIC DUAL FLATPACK

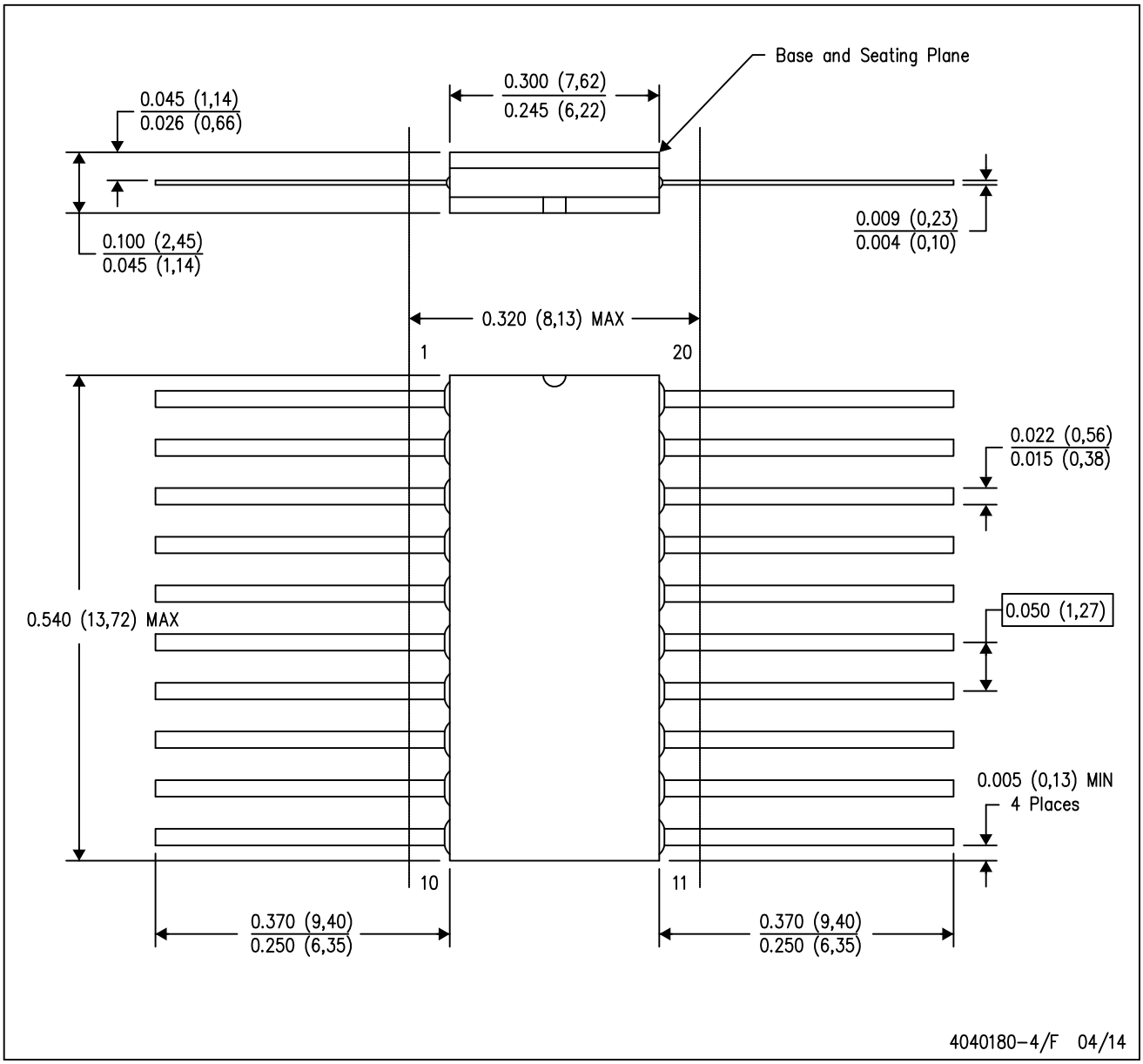

NOTES:
A. All linear dimensions are in inches (millimeters).
B. This drawing is subject to change without notice.
C. This package can be hermetically sealed with a ceramic lid using glass frit.
D. Index point is provided on cap for terminal identification only.
E. Falls within Mil–Std 1835 GDFP2–F20

IMPORTANT NOTICE AND DISCLAIMER

TI PROVIDES TECHNICAL AND RELIABILITY DATA (INCLUDING DATASHEETS), DESIGN RESOURCES (INCLUDING REFERENCE DESIGNS), APPLICATION OR OTHER DESIGN ADVICE, WEB TOOLS, SAFETY INFORMATION, AND OTHER RESOURCES “AS IS” AND WITH ALL FAULTS, AND DISCLAIMS ALL WARRANTIES, EXPRESS AND IMPLIED, INCLUDING WITHOUT LIMITATION ANY IMPLIED WARRANTIES OF MERCHANTABILITY, FITNESS FOR A PARTICULAR PURPOSE OR NON-INFRINGEMENT OF THIRD PARTY INTELLECTUAL PROPERTY RIGHTS.

These resources are intended for skilled developers designing with TI products. You are solely responsible for (1) selecting the appropriate TI products for your application, (2) designing, validating and testing your application, and (3) ensuring your application meets applicable standards, and any other safety, security, or other requirements. These resources are subject to change without notice. TI grants you permission to use these resources only for development of an application that uses the TI products described in the resource. Other reproduction and display of these resources is prohibited. No license is granted to any other TI intellectual property right or to any third party intellectual property right. TI disclaims responsibility for, and you will fully indemnify TI and its representatives against, any claims, damages, costs, losses, and liabilities arising out of your use of these resources.

TI’s products are provided subject to TI’s Terms of Sale (www.ti.com/legal/termsofsale.html) or other applicable terms available either on ti.com or provided in conjunction with such TI products. TI’s provision of these resources does not expand or otherwise alter TI’s applicable warranties or warranty disclaimers for TI products.

Mailing Address: Texas Instruments, Post Office Box 655303, Dallas, Texas 75265
Copyright © 2019, Texas Instruments Incorporated