- **3-State I/O-Type Read-Back Inputs**
- **Bus-Structured Pinout**
- **Choice of True or Inverting Logic**
  - **SN74ALS666 . . . True Outputs**
  - **SN74ALS667 . . . Inverted Outputs**
- **Preset and Clear Inputs**
- **Package Options Include Plastic Small-Outline (DW) Packages and Standard Plastic (NT) 300-mil DIPs**

SN74ALS666 . . . DW OR NT PACKAGE
(TOP VIEW)

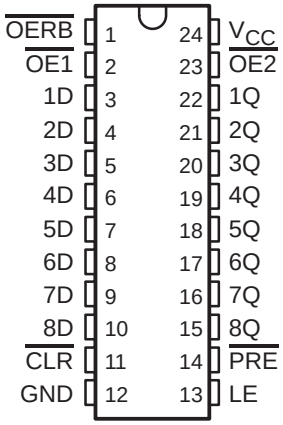

SN74ALS667 . . . DW OR NT PACKAGE
(TOP VIEW)

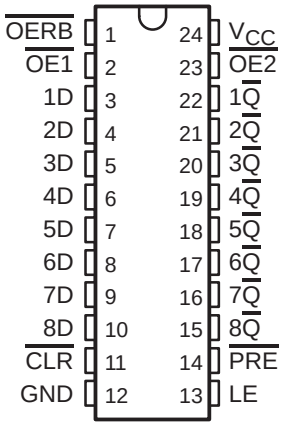

description

These 8-bit D-type transparent latches are designed specifically for storing the contents of the input data bus, plus reading back the stored data onto the input data bus. In addition, they provide a 3-state buffer-type output and are easily utilized in bus-structured applications.

While the latch enable (LE) is high, the Q outputs of the SN74ALS666 follow the data (D) inputs. The $\overline{Q}$ outputs of the SN74ALS667 provide the inverse of the data applied to its D inputs. The Q or $\overline{Q}$ output of both devices is in the high-impedance state if either output-enable ($\overline{OE1}$ or $\overline{OE2}$) input is at a high logic level.

Read back is provided through the read-back control ($\overline{OERB}$) input. When $\overline{OERB}$ is taken low, the data present at the output of the data latches passes back onto the input data bus. When $\overline{OERB}$ is taken high, the output of the data latches is isolated from the D inputs. $\overline{OERB}$ does not affect the internal operation of the latches; however, caution should be exercised to avoid a bus conflict.

The SN74ALS666 and SN74ALS667 are characterized for operation from 0°C to 70°C.

PRODUCTION DATA information is current as of publication date. Products conform to specifications per the terms of Texas Instruments standard warranty. Production processing does not necessarily include testing of all parameters.

Copyright © 1995, Texas Instruments Incorporated

logic symbols†

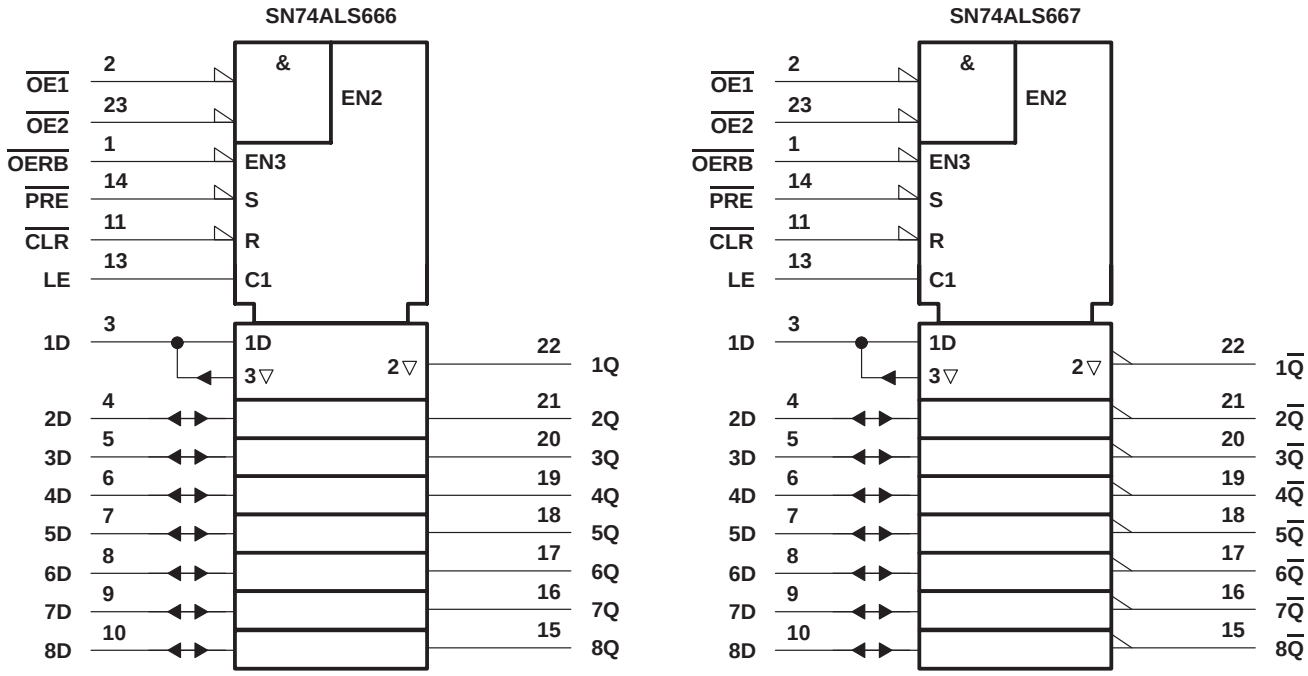

† These symbols are in accordance with ANSI/IEEE Std 91-1984 and IEC Publication 617-12.

logic diagrams (positive logic)

SN74ALS666

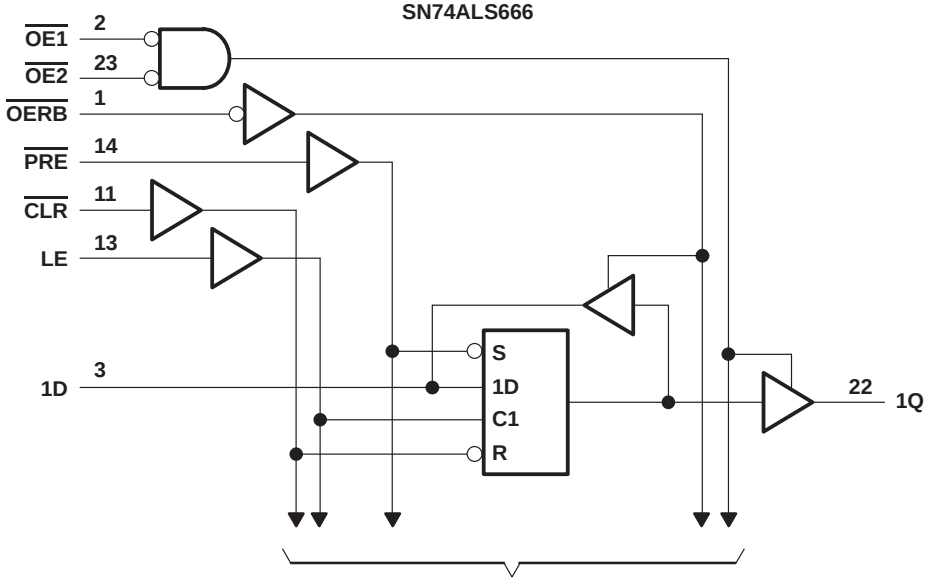

SN74ALS667

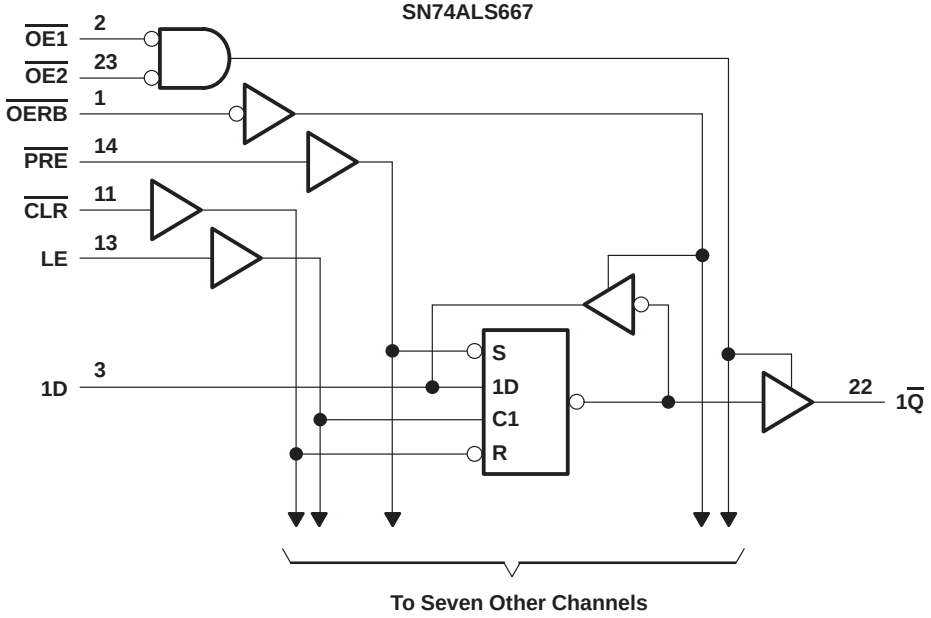

timing diagram

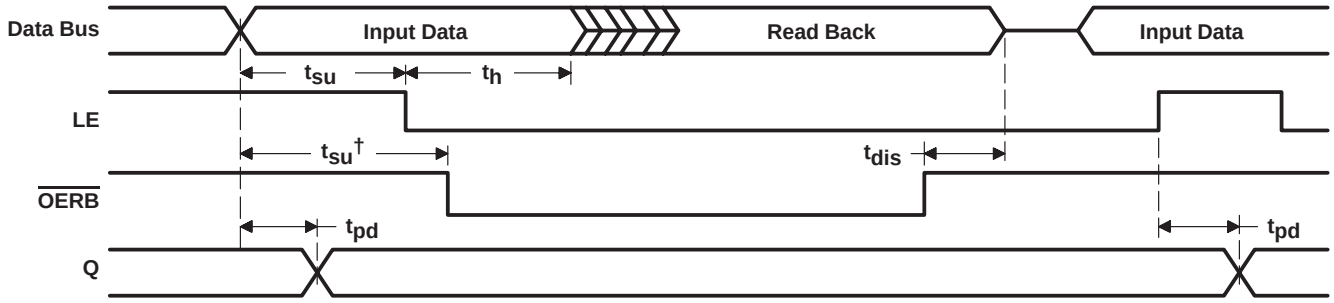

$\overline{CLR}$ = H, $\overline{PRE}$ = H, $\overline{OE1}$ = L, $\overline{OE2}$ = L.
† This setup time ensures the read-back circuit does not create a conflict on the input data bus.

absolute maximum ratings over operating free-air temperature range (unless otherwise noted)‡

Supply voltage, V_{CC} . . . . . 7 V
Input voltage, V_I (all inputs except D inputs) . . . . . 7 V
Voltage applied to D inputs and to disabled 3-state outputs . . . . . 5.5 V
Operating free-air temperature range, T_A: SN74ALS666, SN74ALS667 . . . . . 0°C to 70°C
Storage temperature range . . . . . –65°C to 150°C

‡ Stresses beyond those listed under “absolute maximum ratings” may cause permanent damage to the device. These are stress ratings only, and functional operation of the device at these or any other conditions beyond those indicated under “recommended operating conditions” is not implied. Exposure to absolute-maximum-rated conditions for extended periods may affect device reliability.

recommended operating conditions

			SN74ALS666 SN74ALS667			UNIT
			MIN	NOM	MAX	
V_{CC}	Supply voltage		4.5	5	5.5	V
V_{IH}	High-level input voltage		2			V
V_{IL}	Low-level input voltage				0.8	V
I_{OH}	High-level output current	Q			–2.6	mA
		D			–0.4	
I_{OL}	Low-level output current	Q			24	mA
		D			8	
t_w	Pulse duration	LE high	10			ns
		$\overline{CLR}$ low	10			
		$\overline{PRE}$ low	10			
t_{su}	Setup time	Data before LE↓	10			ns
		Data before $\overline{OERB}$↓	10			
t_h	Hold time, data after LE↓		5			ns
T_A	Operating free-air temperature		0		70	°C

electrical characteristics over recommended operating free-air temperature range (unless otherwise noted)

PARAMETER		TEST CONDITIONS		SN74ALS666 SN74ALS667			UNIT
				MIN	TYP†	MAX	
V_{IK}		V_{CC} = 4.5 V,	I_I = –18 mA			–1.2	V
V_{OH}	All outputs	V_{CC} = 4.5 V to 5.5 V,	I_{OH} = – 0.4 mA	V_{CC} –2			V
	Q or $\overline{Q}$	V_{CC} = 4.5 V,	I_{OH} = – 2.6 mA	2.4	3.2		
V_{OL}	D inputs	V_{CC} = 4.5 V	I_{OL} = 4 mA		0.25	0.4	V
			I_{OL} = 8 mA		0.35	0.5	
	Q or $\overline{Q}$	V_{CC} = 4.5 V	I_{OL} = 12 mA		0.25	0.4	
			I_{OL} = 24 mA		0.35	0.5	
I_{OZH}	Q or $\overline{Q}$	V_{CC} = 5.5 V,	V_O = 2.7 V			20	µA
I_{OZL}	Q or $\overline{Q}$	V_{CC} = 5.5 V,	V_O = 0.4 V			–20	µA
I_I	D inputs	V_{CC} = 5.5 V	V_I = 5.5 V			0.1	mA
	All others		V_I = 7 V			0.1	
I_{IH}	D inputs‡	V_{CC} = 5.5 V,	V_I = 2.7 V			20	µA
	All others					20	
I_{IL}	D inputs‡	V_{CC} = 5.5 V,	V_I = 0.4 V			–0.1	mA
	All others					–0.1	
I_O§		V_{CC} = 5.5 V,	V_O = 2.25 V	–30		–112	mA
I_{CC}	SN74ALS666	V_{CC} = 5.5 V, OERB high	Q outputs high		25	50	mA
			Q outputs low		40	73	
			Q outputs disabled		30	55	
	SN74ALS667	V_{CC} = 5.5 V, OERB high	$\overline{Q}$ outputs high		25	50	
			$\overline{Q}$ outputs low		45	79	
			$\overline{Q}$ outputs disabled		30	60	

† All typical values are at V_{CC} = 5 V, T_A = 25°C.
‡ For I/O ports (Q_A through Q_H), the parameters I_{IH} and I_{IL} include the off-state output current.
§ The output conditions have been chosen to produce a current that closely approximates one half of the true short-circuit output current, I_{OS}.

switching characteristics (see Figure 1)

PARAMETER	FROM (INPUT)	TO (OUTPUT)	V_{CC} = 4.5 V to 5.5 V, C_L = 50 pF, T_A = MIN to MAX†		UNIT
			SN74ALS666		
			MIN	MAX	
t_{PLH}	D	Q	3	14	ns
t_{PHL}			4	18	
t_{PLH}	LE	Q	6	21	ns
t_{PHL}			8	27	
t_{PHL}	$\overline{CLR}$	Q	9	29	ns
		D	11	32	
t_{PLH}	$\overline{PRE}$	Q	7	22	ns
t_{PHL}		D	9	28	
t_{en}‡	$\overline{OERB}$	D	4	21	ns
	$\overline{OE1}$, $\overline{OE2}$	Q	4	21	
t_{dis}§	$\overline{OERB}$	D	1	14	ns
	$\overline{OE1}$, $\overline{OE2}$	Q	1	14	

† For conditions shown as MIN or MAX, use the appropriate value specified under recommended operating conditions.
‡ $t_{en} = t_{PZH}$ or t_{PZL}
§ $t_{dis} = t_{PHZ}$ or t_{PLZ}

switching characteristics (see Figure 1)

PARAMETER	FROM (INPUT)	TO (OUTPUT)	V_{CC} = 4.5 V to 5.5 V, C_L = 50 pF, T_A = MIN to MAX†		UNIT
			SN74ALS667		
			MIN	MAX	
t_{PLH}	D	$\overline{Q}$	6	20	ns
t_{PHL}			4	15	
t_{PLH}	LE	$\overline{Q}$	9	28	ns
t_{PHL}			7	22	
t_{PHL}	$\overline{CLR}$	$\overline{Q}$	7	24	ns
		D	8	26	
t_{PLH}	$\overline{PRE}$	$\overline{Q}$	8	25	ns
t_{PHL}		D	9	28	
t_{en}‡	$\overline{OERB}$	D	4	21	ns
	$\overline{OE1}$, $\overline{OE2}$	$\overline{Q}$	4	21	
t_{dis}§	$\overline{OERB}$	D	1	14	ns
	$\overline{OE1}$, $\overline{OE2}$	$\overline{Q}$	1	14	

† For conditions shown as MIN or MAX, use the appropriate value specified under recommended operating conditions.
‡ $t_{en} = t_{PZH}$ or t_{PZL}
§ $t_{dis} = t_{PHZ}$ or t_{PLZ}

PARAMETER MEASUREMENT INFORMATION

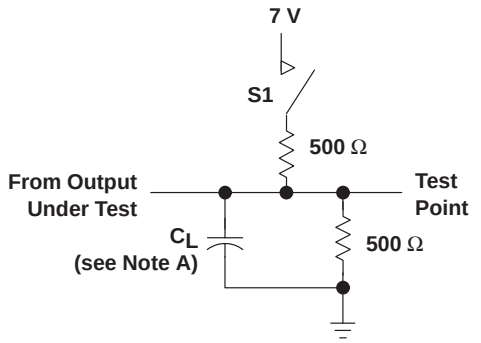

LOAD CIRCUIT FOR Q OR $\overline{Q}$ OUTPUTS

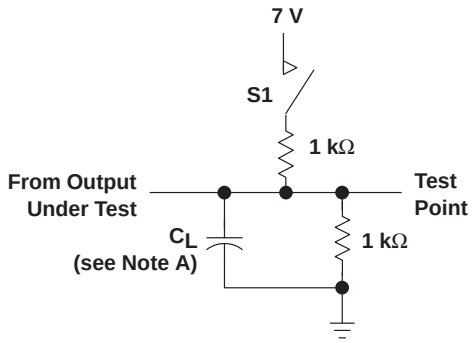

LOAD CIRCUIT FOR D OUTPUTS

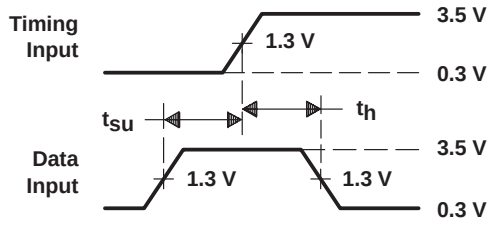

VOLTAGE WAVEFORMS
SETUP AND HOLD TIMES

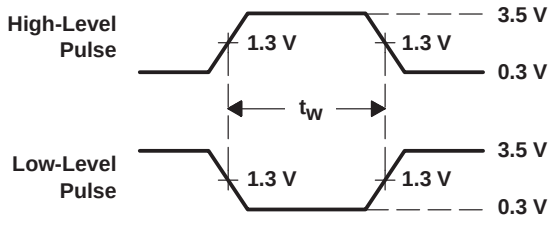

VOLTAGE WAVEFORMS
PULSE DURATIONS

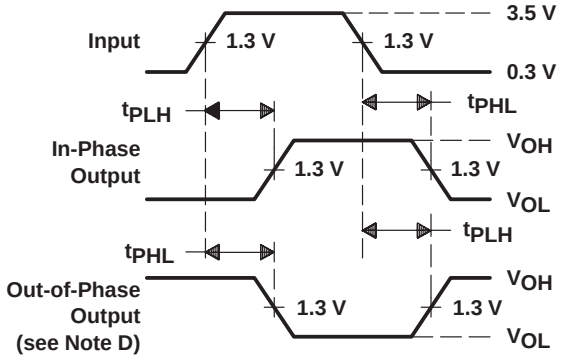

VOLTAGE WAVEFORMS
PROPAGATION DELAY TIMES

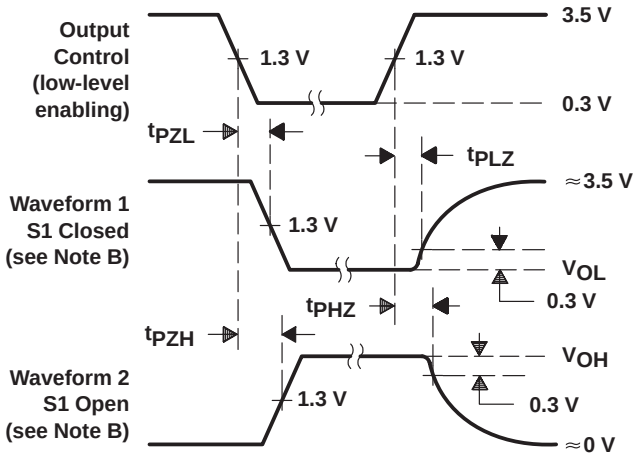

VOLTAGE WAVEFORMS
ENABLE AND DISABLE TIMES, 3-STATE OUTPUTS

NOTES: A. C_L includes probe and jig capacitance.
B. Waveform 1 is for an output with internal conditions such that the output is low except when disabled by the output control. Waveform 2 is for an output with internal conditions such that the output is high except when disabled by the output control.
C. All input pulses have the following characteristics: PRR ≤ 1 MHz, $t_r = t_f = 2$ ns, duty cycle = 50%.
D. When measuring propagation delay times of 3-state outputs, switch S1 is open.

Figure 1. Load Circuits and Voltage Waveforms

PACKAGING INFORMATION

Orderable Device	Status (1)	Package Type	Package Drawing	Pins	Package Qty	Eco Plan (2)	Lead/Ball Finish (6)	MSL Peak Temp (3)	Op Temp (°C)	Device Marking (4/5)	Samples
SN74ALS666DW	ACTIVE	SOIC	DW	24	25	Green (RoHS & no Sb/Br)	CU NIPDAU	Level-1-260C-UNLIM	0 to 70	ALS666	Samples
SN74ALS666DWE4	ACTIVE	SOIC	DW	24	25	Green (RoHS & no Sb/Br)	CU NIPDAU	Level-1-260C-UNLIM	0 to 70	ALS666	Samples
SN74ALS666DWG4	ACTIVE	SOIC	DW	24	25	Green (RoHS & no Sb/Br)	CU NIPDAU	Level-1-260C-UNLIM	0 to 70	ALS666	Samples
SN74ALS667DW	ACTIVE	SOIC	DW	24	25	Green (RoHS & no Sb/Br)	CU NIPDAU	Level-1-260C-UNLIM	0 to 70	ALS667	Samples

(1) The marketing status values are defined as follows:
ACTIVE: Product device recommended for new designs.
LIFEBUY: TI has announced that the device will be discontinued, and a lifetime-buy period is in effect.
NRND: Not recommended for new designs. Device is in production to support existing customers, but TI does not recommend using this part in a new design.
PREVIEW: Device has been announced but is not in production. Samples may or may not be available.
OBSOLETE: TI has discontinued the production of the device.

(2) Eco Plan - The planned eco-friendly classification: Pb-Free (RoHS), Pb-Free (RoHS Exempt), or Green (RoHS & no Sb/Br) - please check http://www.ti.com/productcontent for the latest availability information and additional product content details.
TBD: The Pb-Free/Green conversion plan has not been defined.
Pb-Free (RoHS): TI's terms "Lead-Free" or "Pb-Free" mean semiconductor products that are compatible with the current RoHS requirements for all 6 substances, including the requirement that lead not exceed 0.1% by weight in homogeneous materials. Where designed to be soldered at high temperatures, TI Pb-Free products are suitable for use in specified lead-free processes.
Pb-Free (RoHS Exempt): This component has a RoHS exemption for either 1) lead-based flip-chip solder bumps used between the die and package, or 2) lead-based die adhesive used between the die and leadframe. The component is otherwise considered Pb-Free (RoHS compatible) as defined above.
Green (RoHS & no Sb/Br): TI defines "Green" to mean Pb-Free (RoHS compatible), and free of Bromine (Br) and Antimony (Sb) based flame retardants (Br or Sb do not exceed 0.1% by weight in homogeneous material)

(3) MSL, Peak Temp. - The Moisture Sensitivity Level rating according to the JEDEC industry standard classifications, and peak solder temperature.

(4) There may be additional marking, which relates to the logo, the lot trace code information, or the environmental category on the device.

(5) Multiple Device Markings will be inside parentheses. Only one Device Marking contained in parentheses and separated by a "~" will appear on a device. If a line is indented then it is a continuation of the previous line and the two combined represent the entire Device Marking for that device.

(6) Lead/Ball Finish - Orderable Devices may have multiple material finish options. Finish options are separated by a vertical ruled line. Lead/Ball Finish values may wrap to two lines if the finish value exceeds the maximum column width.

Important Information and Disclaimer: The information provided on this page represents TI's knowledge and belief as of the date that it is provided. TI bases its knowledge and belief on information provided by third parties, and makes no representation or warranty as to the accuracy of such information. Efforts are underway to better integrate information from third parties. TI has taken and continues to take reasonable steps to provide representative and accurate information but may not have conducted destructive testing or chemical analysis on incoming materials and chemicals. TI and TI suppliers consider certain information to be proprietary, and thus CAS numbers and other limited information may not be available for release.

In no event shall TI's liability arising out of such information exceed the total purchase price of the TI part(s) at issue in this document sold by TI to Customer on an annual basis.

DW (R–PDSO–G24) PLASTIC SMALL OUTLINE

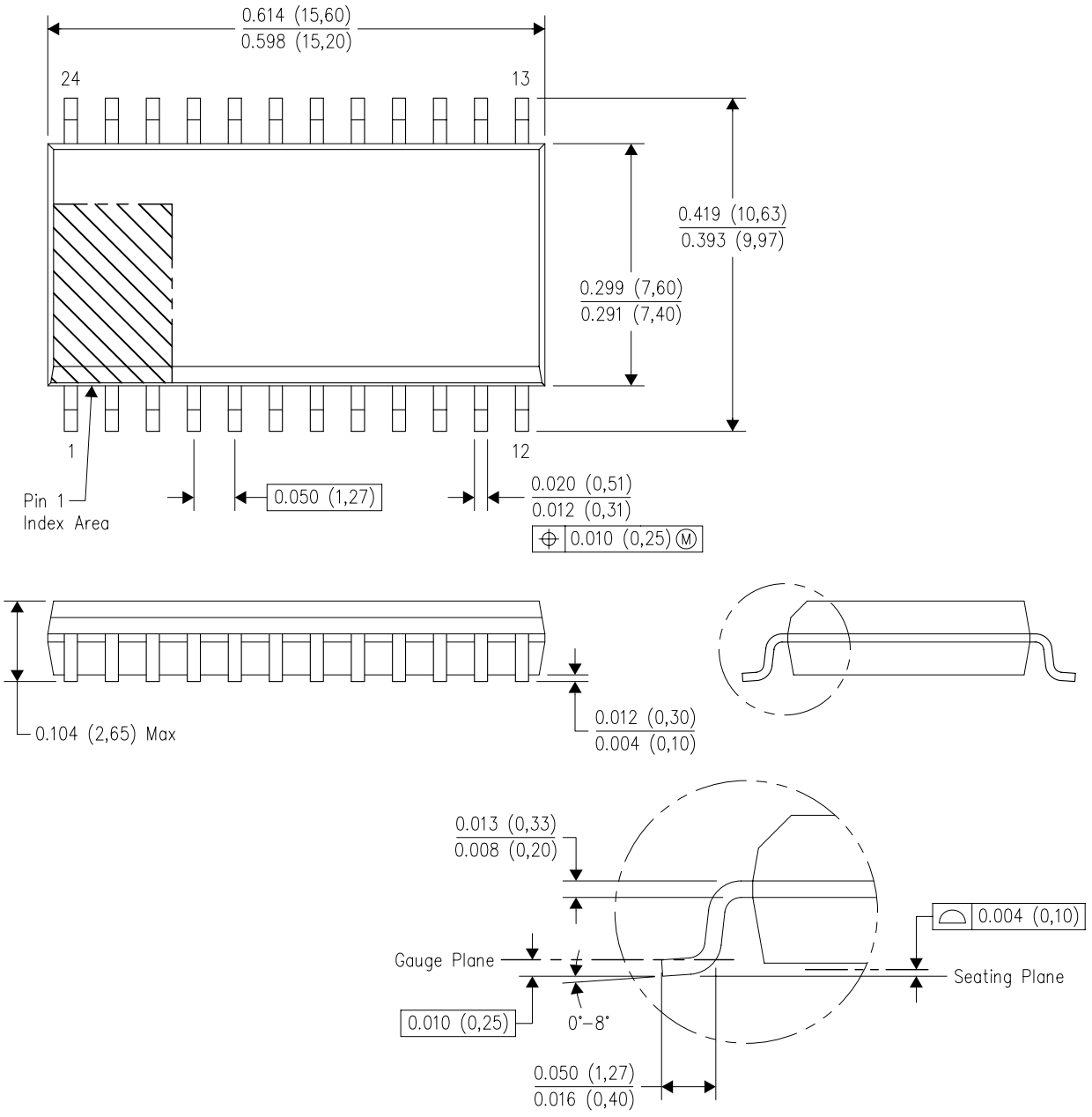

NOTES:
A. All linear dimensions are in inches (millimeters). Dimensioning and tolerancing per ASME Y14.5M–1994.
B. This drawing is subject to change without notice.
C. Body dimensions do not include mold flash or protrusion not to exceed 0.006 (0,15).
D. Falls within JEDEC MS–013 variation AD.

IMPORTANT NOTICE AND DISCLAIMER

TI PROVIDES TECHNICAL AND RELIABILITY DATA (INCLUDING DATASHEETS), DESIGN RESOURCES (INCLUDING REFERENCE DESIGNS), APPLICATION OR OTHER DESIGN ADVICE, WEB TOOLS, SAFETY INFORMATION, AND OTHER RESOURCES “AS IS” AND WITH ALL FAULTS, AND DISCLAIMS ALL WARRANTIES, EXPRESS AND IMPLIED, INCLUDING WITHOUT LIMITATION ANY IMPLIED WARRANTIES OF MERCHANTABILITY, FITNESS FOR A PARTICULAR PURPOSE OR NON-INFRINGEMENT OF THIRD PARTY INTELLECTUAL PROPERTY RIGHTS.

These resources are intended for skilled developers designing with TI products. You are solely responsible for (1) selecting the appropriate TI products for your application, (2) designing, validating and testing your application, and (3) ensuring your application meets applicable standards, and any other safety, security, or other requirements. These resources are subject to change without notice. TI grants you permission to use these resources only for development of an application that uses the TI products described in the resource. Other reproduction and display of these resources is prohibited. No license is granted to any other TI intellectual property right or to any third party intellectual property right. TI disclaims responsibility for, and you will fully indemnify TI and its representatives against, any claims, damages, costs, losses, and liabilities arising out of your use of these resources.

TI’s products are provided subject to TI’s Terms of Sale (www.ti.com/legal/termsofsale.html) or other applicable terms available either on ti.com or provided in conjunction with such TI products. TI’s provision of these resources does not expand or otherwise alter TI’s applicable warranties or warranty disclaimers for TI products.

Mailing Address: Texas Instruments, Post Office Box 655303, Dallas, Texas 75265
Copyright © 2019, Texas Instruments Incorporated