- **Typical V_{OLP} (Output Ground Bounce) <1 V at V_{CC} = 5 V, T_A = 25°C**
- **High-Drive Outputs (–32-mA I_{OH}, 64-mA I_{OL})**
- **I_{off} Supports Partial-Power-Down Mode Operation**
- **Latch-Up Performance Exceeds 500 mA Per JEDEC Standard JESD 17**
- **ESD Protection Exceeds JESD 22**
  - **2000-V Human-Body Model (A114-A)**
  - **200-V Machine Model (A115-A)**

SN54ABT573 . . . J OR W PACKAGE
SN74ABT573A . . . DB, DW, N, NS, OR PW PACKAGE
(TOP VIEW)

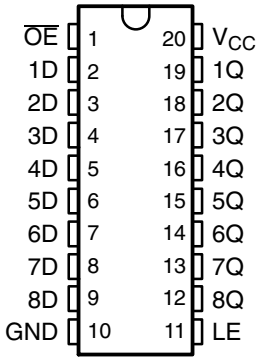

SN74ABT573A . . . RGY PACKAGE
(TOP VIEW)

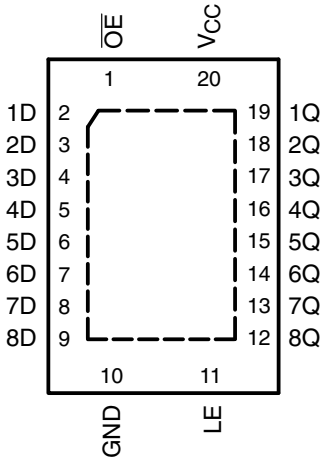

SN54ABT573 . . . FK PACKAGE
(TOP VIEW)

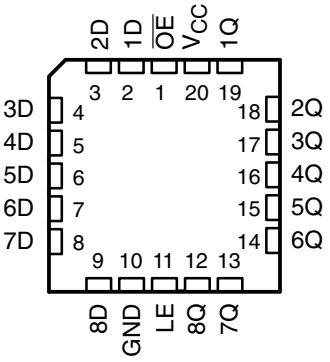

description/ordering information

These 8-bit latches feature 3-state outputs designed specifically for driving highly capacitive or relatively low-impedance loads. They are particularly suitable for implementing buffer registers, I/O ports, bidirectional bus drivers, and working registers.

ORDERING INFORMATION

T_A	PACKAGE†		ORDERABLE PART NUMBER	TOP-SIDE MARKING
–40°C to 85°C	PDIP – N	Tube	SN74ABT573AN	SN74ABT573AN
	QFN – RGY	Tape and reel	SN74ABT573ARGYR	AB573A
	SOIC – DW	Tube	SN74ABT573ADW	ABT573A
		Tape and reel	SN74ABT573ADWR	
	SOP – NS	Tape and reel	SN74ABT573ANSR	ABT573A
	SSOP – DB	Tape and reel	SN74ABT573ADBR	AB573A
	TSSOP – PW	Tube	SN74ABT573APW	AB573A
		Tape and reel	SN74ABT573APWR	
	VFBGA – GQN	Tape and reel	SN74ABT573AGQNR	AB573A
	VFBGA – ZQN (Pb-free)		SN74ABT573AZQNR	
–55°C to 125°C	CDIP – J	Tube	SNJ54ABT573J	SNJ54ABT573J
	CFP – W	Tube	SNJ54ABT573W	SNJ54ABT573W
	LCCC – FK	Tube	SNJ54ABT573FK	SNJ54ABT573FK

† Package drawings, standard packing quantities, thermal data, symbolization, and PCB design guidelines are available at www.ti.com/sc/package.



Please be aware that an important notice concerning availability, standard warranty, and use in critical applications of Texas Instruments semiconductor products and disclaimers thereto appears at the end of this data sheet.

PRODUCTION DATA information is current as of publication date. Products conform to specifications per the terms of Texas Instruments standard warranty. Production processing does not necessarily include testing of all parameters.

Copyright © 2003, Texas Instruments Incorporated
On products compliant to MIL-PRF-38535, all parameters are tested unless otherwise noted. On all other products, production processing does not necessarily include testing of all parameters.

description/ordering information (continued)

A buffered output-enable ($\overline{OE}$) input can be used to place the eight outputs in either a normal logic state (high or low logic levels) or the high-impedance state. In the high-impedance state, the outputs neither load nor drive the bus lines significantly. The high-impedance state and increased drive provide the capability to drive bus lines without need for interface or pullup components.

$\overline{OE}$ does not affect the internal operations of the latches. Old data can be retained or new data can be entered while the outputs are in the high-impedance state.

To ensure the high-impedance state during power up or power down, $\overline{OE}$ should be tied to V_{CC} through a pullup resistor; the minimum value of the resistor is determined by the current-sinking capability of the driver.

This device is fully specified for partial-power-down applications using I_{off}. The I_{off} circuitry disables the outputs, preventing damaging current backflow through the device when it is powered down.

SN74ABT573A . . . GQN OR ZQN PACKAGE
(TOP VIEW)

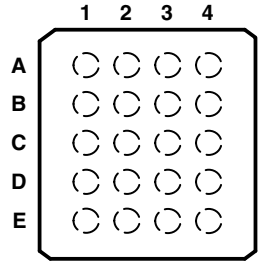

terminal assignments

	1	2	3	4
A	1D	$\overline{OE}$	V_{CC}	1Q
B	3D	3Q	2D	2Q
C	5D	4D	5Q	4Q
D	7D	7Q	6D	6Q
E	GND	8D	LE	8Q

FUNCTION TABLE
(each latch)

INPUTS			OUTPUT
$\overline{OE}$	LE	D	Q
L	H	H	H
L	H	L	L
L	L	X	Q_0
H	X	X	Z

logic diagram (positive logic)

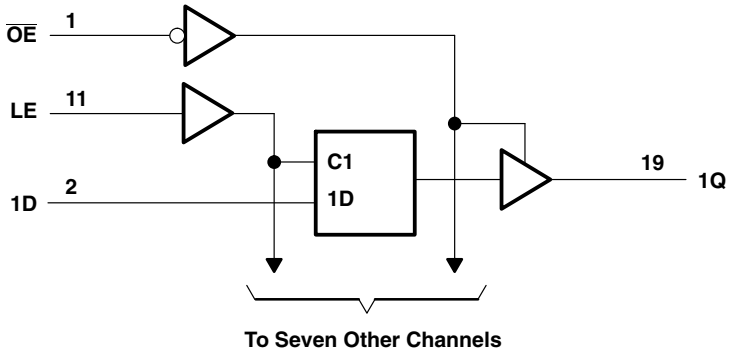

Pin numbers shown are for the DB, DW, FK, J, N, NS, PW, RGY, and W packages.

absolute maximum ratings over operating free-air temperature range (unless otherwise noted)†

Supply voltage range, V_{CC} . . . . . –0.5 V to 7 V
Input voltage range, V_I (see Note 1) . . . . . –0.5 V to 7 V
Voltage range applied to any output in the high or power-off state, V_O . . . . . –0.5 V to 5.5 V
Current into any output in the low state, I_O: SN54ABT573 . . . . . 96 mA
SN74ABT573A . . . . . 128 mA
Input clamp current, I_{IK} (V_I < 0) . . . . . –18 mA
Output clamp current, I_{OK} (V_O < 0) . . . . . –50 mA
Package thermal impedance, θ_{JA} (see Note 2): DB package . . . . . 70°C/W
(see Note 2): DW package . . . . . 58°C/W
(see Note 2): GQN/ZQN package . . . . . 78°C/W
(see Note 2): N package . . . . . 69°C/W
(see Note 2): NS package . . . . . 60°C/W
(see Note 2): PW package . . . . . 83°C/W
(see Note 3): RGY package . . . . . 37°C/W
Storage temperature range, T_{stg} . . . . . –65°C to 150°C

† Stresses beyond those listed under “absolute maximum ratings” may cause permanent damage to the device. These are stress ratings only, and functional operation of the device at these or any other conditions beyond those indicated under “recommended operating conditions” is not implied. Exposure to absolute-maximum-rated conditions for extended periods may affect device reliability.

NOTES: 1. The input and output negative-voltage ratings may be exceeded if the input and output clamp-current ratings are observed.
2. The package thermal impedance is calculated in accordance with JESD 51-7.
3. The package thermal impedance is calculated in accordance with JESD 51-5.

recommended operating conditions (see Note 4)

			SN54ABT573		SN74ABT573A		UNIT
			MIN	MAX	MIN	MAX	
V_{CC}	Supply voltage		4.5	5.5	4.5	5.5	V
V_{IH}	High-level input voltage		2		2		V
V_{IL}	Low-level input voltage			0.8		0.8	V
V_I	Input voltage		0	V_{CC}	0	V_{CC}	V
I_{OH}	High-level output current			–24		–32	mA
I_{OL}	Low-level output current			48		64	mA
$\Delta t/\Delta v$	Input transition rise or fall rate	Outputs enabled		5		5	ns/V
T_A	Operating free-air temperature		–55	125	–40	85	°C

NOTE 4: All unused inputs of the device must be held at V_{CC} or GND to ensure proper device operation. Refer to the TI application report, *Implications of Slow or Floating CMOS Inputs*, literature number SCBA004.

electrical characteristics over recommended operating free-air temperature range (unless otherwise noted)

PARAMETER	TEST CONDITIONS			T_A = 25°C			SN54ABT573		SN74ABT573A		UNIT
				MIN	TYP†	MAX	MIN	MAX	MIN	MAX	
V_{IK}	V_{CC} = 4.5 V,	I_I = –18 mA				–1.2		–1.2		–1.2	V
V_{OH}	V_{CC} = 4.5 V,	I_{OH} = –3 mA		2.5			2.5		2.5		V
	V_{CC} = 5 V,	I_{OH} = –3 mA		3			3		3		
	V_{CC} = 4.5 V	I_{OH} = –24 mA		2			2				
		I_{OH} = –32 mA		2*					2		
V_{OL}	V_{CC} = 4.5 V	I_{OL} = 48 mA				0.55		0.55			V
		I_{OL} = 64 mA				0.55*				0.55	
V_{hys}					100						mV
I_I	V_{CC} = 5.5 V,	V_I = V_{CC} or GND				±1		±1		±1	µA
I_{OZH}	V_{CC} = 5.5 V,	V_O = 2.7 V				10‡		10‡		10‡	µA
I_{OZL}	V_{CC} = 5.5 V,	V_O = 0.5 V				–10‡		–10‡		–10‡	µA
I_{off}	V_{CC} = 0,	V_I or V_O ≤ 4.5 V				±100				±100	µA
I_{CEX}	V_{CC} = 5.5 V,	V_O = 5.5 V	Outputs high			50		50		50	µA
I_O§	V_{CC} = 5.5 V,	V_O = 2.5 V		–50	–100	–180	–50	–180	–50	–180	mA
I_{CC}	V_{CC} = 5.5 V, I_O = 0, V_I = V_{CC} or GND		Outputs high		1	250		250		250	µA
			Outputs low		24	30		30		30	mA
			Outputs disabled		0.5	250		250		250	µA
ΔI_{CC}¶	V_{CC} = 5.5 V, One input at 3.4 V, Other inputs at V_{CC} or GND					1.5		1.5		1.5	mA
C_i	V_I = 2.5 V or 0.5 V				3.5						pF
C_o	V_O = 2.5 V or 0.5 V				6.5						pF

* On products compliant to MIL-PRF-38535, this parameter does not apply.
† All typical values are at V_{CC} = 5 V.
‡ This data sheet limit may vary among suppliers.
§ Not more than one output should be tested at a time, and the duration of the test should not exceed one second.
¶ This is the increase in supply current for each input that is at the specified TTL voltage level, rather than V_{CC} or GND.

timing requirements over recommended ranges of supply voltage and operating free-air temperature (unless otherwise noted) (see Figure 1)

			SN54ABT573			UNIT
			V_{CC} = 5 V, T_A = 25°C		MIN	MAX
			MIN	MAX		
t_w	Pulse duration, LE high		3.3		3.3		ns
t_{su}	Setup time, data before LE↓	High	1.9		2.5		ns
		Low	1.5		2.5		
t_h	Hold time, data after LE↓		1		2.5		ns

timing requirements over recommended ranges of supply voltage and operating free-air temperature (unless otherwise noted) (see Figure 1)

			SN74ABT573A				UNIT
			V_{CC} = 5 V, T_A = 25°C		MIN	MAX	
			MIN	MAX			
t_w	Pulse duration, LE high		3.3		3.3		ns
t_{su}	Setup time, data before LE↓	High	1.9		1.9		ns
		Low	1.5		1.5		
t_h	Hold time, data after LE↓		1.8†		1.8†		ns

† This data-sheet limit may vary among suppliers.

switching characteristics over recommended ranges of supply voltage and operating free-air temperature, C_L = 50 pF (unless otherwise noted) (see Figure 1)

PARAMETER	FROM (INPUT)	TO (OUTPUT)	SN54ABT573					UNIT
			V_{CC} = 5 V, T_A = 25°C			MIN	MAX	
			MIN	TYP	MAX			
t_{PLH}	D	Q	1.9	3.2	5.4	1.4	6.4	ns
t_{PHL}			2.2	4.2	5.7	1.6	6.7	
t_{PLH}	LE	Q	2.2	4	6.1	2	7.1	ns
t_{PHL}			3.2	5.2	6.7	2.8	7.5	
t_{PZH}	$\overline{OE}$	Q	1.2	3.2	4.7	0.8	6.2	ns
t_{PZL}			2.7	4.7	6.2	2	7.2	
t_{PHZ}	$\overline{OE}$	Q	2.5	4.9	6.4	2.2	7.7	ns
t_{PLZ}			2	4.2	6	1.4	7	

switching characteristics over recommended ranges of supply voltage and operating free-air temperature, C_L = 50 pF (unless otherwise noted) (see Figure 1)

PARAMETER	FROM (INPUT)	TO (OUTPUT)	SN74ABT573A					UNIT
			V_{CC} = 5 V, T_A = 25°C			MIN	MAX	
			MIN	TYP	MAX			
t_{PLH}	D	Q	1.9	3.2	5.4	1.9	5.9	ns
t_{PHL}			2.2	4.2	5.7	2.2	6.2	
t_{PLH}	LE	Q	2.2	4	6.1	2.2	6.6	ns
t_{PHL}			3.2	5.2	6.7	3.2	7.2	
t_{PZH}	$\overline{OE}$	Q	1.2	3.2	4.7	1.2	5.2	ns
t_{PZL}			2.5†	4.7	6.2	2.5†	6.7	
t_{PHZ}	$\overline{OE}$	Q	2.5	4.9	6.4	2.5	7.1†	ns
t_{PLZ}			2	4.2	6	2	6.5	

† This data-sheet limit may vary among suppliers.

PARAMETER MEASUREMENT INFORMATION

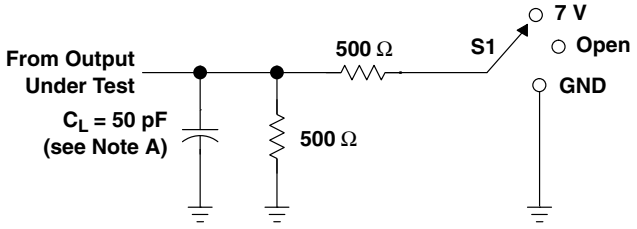

TEST	S1
t_{PLH}/t_{PHL}	Open
t_{PLZ}/t_{PZL}	7 V
t_{PHZ}/t_{PZH}	Open

LOAD CIRCUIT

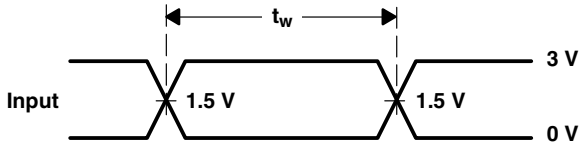

VOLTAGE WAVEFORMS
PULSE DURATION

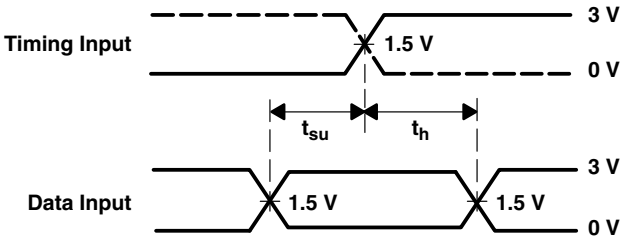

VOLTAGE WAVEFORMS
SETUP AND HOLD TIMES

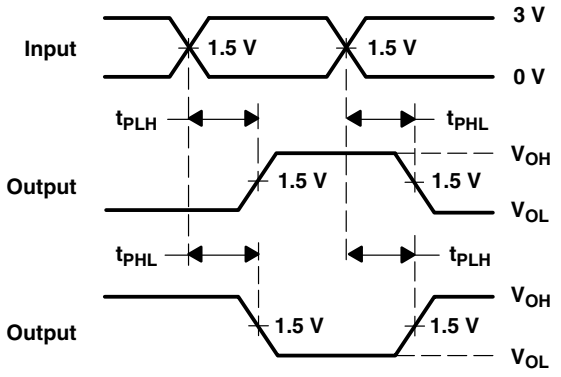

VOLTAGE WAVEFORMS
PROPAGATION DELAY TIMES
INVERTING AND NONINVERTING OUTPUTS

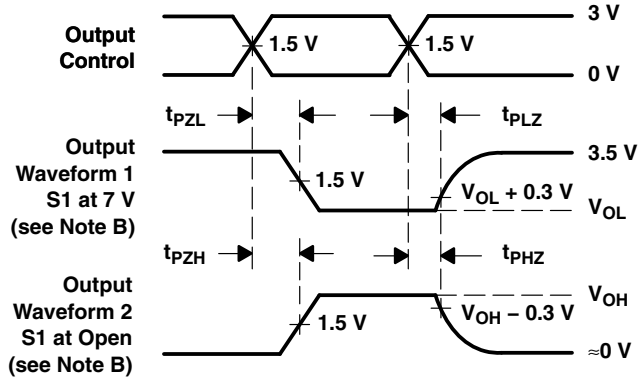

VOLTAGE WAVEFORMS
ENABLE AND DISABLE TIMES
LOW- AND HIGH-LEVEL ENABLING

NOTES: A. C_L includes probe and jig capacitance.
B. Waveform 1 is for an output with internal conditions such that the output is low except when disabled by the output control. Waveform 2 is for an output with internal conditions such that the output is high except when disabled by the output control.
C. All input pulses are supplied by generators having the following characteristics: PRR ≤ 10 MHz, Z_O = 50 Ω, t_r ≤ 2.5 ns, t_f ≤ 2.5 ns.
D. The outputs are measured one at a time with one transition per measurement.
E. All parameters and waveforms are not applicable to all devices.

Figure 1. Load Circuit and Voltage Waveforms

PACKAGING INFORMATION

Orderable Device	Status (1)	Package Type	Package Drawing	Pins	Package Qty	Eco Plan (2)	Lead/Ball Finish (6)	MSL Peak Temp (3)	Op Temp (°C)	Device Marking (4/5)	Samples
5962-9321901Q2A	ACTIVE	LCCC	FK	20	1	TBD	POST-PLATE	N / A for Pkg Type	-55 to 125	5962-9321901Q2A SNJ54ABT 573FK	Samples
5962-9321901QRA	ACTIVE	CDIP	J	20	1	TBD	A42	N / A for Pkg Type	-55 to 125	5962-9321901QRA SNJ54ABT573J	Samples
5962-9321901QSA	ACTIVE	CFP	W	20	1	TBD	A42	N / A for Pkg Type	-55 to 125	5962-9321901QSA SNJ54ABT573W	Samples
SN74ABT573ADBR	ACTIVE	SSOP	DB	20	2000	Green (RoHS & no Sb/Br)	CU NIPDAU	Level-1-260C-UNLIM	-40 to 85	AB573A	Samples
SN74ABT573ADW	ACTIVE	SOIC	DW	20	25	Green (RoHS & no Sb/Br)	CU NIPDAU	Level-1-260C-UNLIM	-40 to 85	ABT573A	Samples
SN74ABT573ADWR	ACTIVE	SOIC	DW	20	2000	Green (RoHS & no Sb/Br)	CU NIPDAU	Level-1-260C-UNLIM	-40 to 85	ABT573A	Samples
SN74ABT573ADWRE4	ACTIVE	SOIC	DW	20	2000	Green (RoHS & no Sb/Br)	CU NIPDAU	Level-1-260C-UNLIM	-40 to 85	ABT573A	Samples
SN74ABT573AN	ACTIVE	PDIP	N	20	20	Pb-Free (RoHS)	CU NIPDAU	N / A for Pkg Type	-40 to 85	SN74ABT573AN	Samples
SN74ABT573APW	ACTIVE	TSSOP	PW	20	70	Green (RoHS & no Sb/Br)	CU NIPDAU	Level-1-260C-UNLIM	-40 to 85	AB573A	Samples
SN74ABT573APWR	ACTIVE	TSSOP	PW	20	2000	Green (RoHS & no Sb/Br)	CU NIPDAU	Level-1-260C-UNLIM	-40 to 85	AB573A	Samples
SN74ABT573ARGYR	ACTIVE	VQFN	RGY	20	3000	Green (RoHS & no Sb/Br)	CU NIPDAU	Level-2-260C-1 YEAR	-40 to 85	AB573A	Samples
SNJ54ABT573FK	ACTIVE	LCCC	FK	20	1	TBD	POST-PLATE	N / A for Pkg Type	-55 to 125	5962-9321901Q2A SNJ54ABT 573FK	Samples
SNJ54ABT573J	ACTIVE	CDIP	J	20	1	TBD	A42	N / A for Pkg Type	-55 to 125	5962-9321901QRA SNJ54ABT573J	Samples
SNJ54ABT573W	ACTIVE	CFP	W	20	1	TBD	A42	N / A for Pkg Type	-55 to 125	5962-9321901QSA	Samples

Orderable Device	Status (1)	Package Type	Package Drawing	Pins	Package Qty	Eco Plan (2)	Lead/Ball Finish (6)	MSL Peak Temp (3)	Op Temp (°C)	Device Marking (4/5)	Samples
										SNJ54ABT573W	

(1) The marketing status values are defined as follows:
ACTIVE: Product device recommended for new designs.
LIFEBUY: TI has announced that the device will be discontinued, and a lifetime-buy period is in effect.
NRND: Not recommended for new designs. Device is in production to support existing customers, but TI does not recommend using this part in a new design.
PREVIEW: Device has been announced but is not in production. Samples may or may not be available.
OBSOLETE: TI has discontinued the production of the device.

(2) **RoHS:** TI defines "RoHS" to mean semiconductor products that are compliant with the current EU RoHS requirements for all 10 RoHS substances, including the requirement that RoHS substance do not exceed 0.1% by weight in homogeneous materials. Where designed to be soldered at high temperatures, "RoHS" products are suitable for use in specified lead-free processes. TI may reference these types of products as "Pb-Free".
RoHS Exempt: TI defines "RoHS Exempt" to mean products that contain lead but are compliant with EU RoHS pursuant to a specific EU RoHS exemption.
Green: TI defines "Green" to mean the content of Chlorine (Cl) and Bromine (Br) based flame retardants meet JS709B low halogen requirements of <=1000ppm threshold. Antimony trioxide based flame retardants must also meet the <=1000ppm threshold requirement.

(3) MSL, Peak Temp. - The Moisture Sensitivity Level rating according to the JEDEC industry standard classifications, and peak solder temperature.

(4) There may be additional marking, which relates to the logo, the lot trace code information, or the environmental category on the device.

(5) Multiple Device Markings will be inside parentheses. Only one Device Marking contained in parentheses and separated by a "~" will appear on a device. If a line is indented then it is a continuation of the previous line and the two combined represent the entire Device Marking for that device.

(6) Lead/Ball Finish - Orderable Devices may have multiple material finish options. Finish options are separated by a vertical ruled line. Lead/Ball Finish values may wrap to two lines if the finish value exceeds the maximum column width.

Important Information and Disclaimer: The information provided on this page represents TI's knowledge and belief as of the date that it is provided. TI bases its knowledge and belief on information provided by third parties, and makes no representation or warranty as to the accuracy of such information. Efforts are underway to better integrate information from third parties. TI has taken and continues to take reasonable steps to provide representative and accurate information but may not have conducted destructive testing or chemical analysis on incoming materials and chemicals. TI and TI suppliers consider certain information to be proprietary, and thus CAS numbers and other limited information may not be available for release.

In no event shall TI's liability arising out of such information exceed the total purchase price of the TI part(s) at issue in this document sold by TI to Customer on an annual basis.

TAPE AND REEL INFORMATION

REEL DIMENSIONS

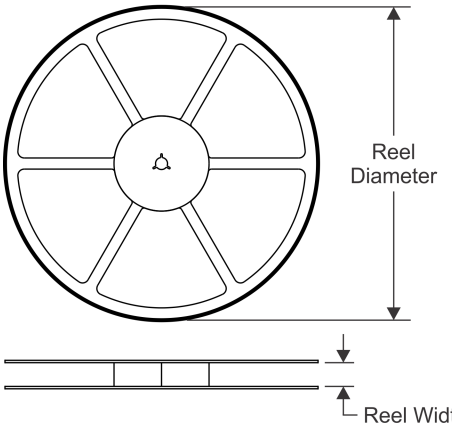

TAPE DIMENSIONS

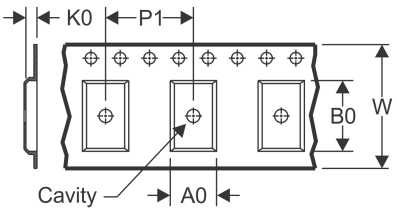

A0	Dimension designed to accommodate the component width
B0	Dimension designed to accommodate the component length
K0	Dimension designed to accommodate the component thickness
W	Overall width of the carrier tape
P1	Pitch between successive cavity centers

QUADRANT ASSIGNMENTS FOR PIN 1 ORIENTATION IN TAPE

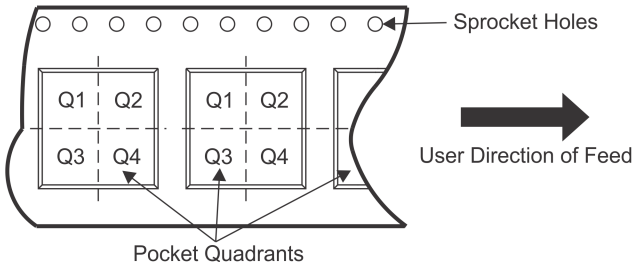

*All dimensions are nominal

Device	Package Type	Package Drawing	Pins	SPQ	Reel Diameter (mm)	Reel Width W1 (mm)	A0 (mm)	B0 (mm)	K0 (mm)	P1 (mm)	W (mm)	Pin1 Quadrant
SN74ABT573ADBR	SSOP	DB	20	2000	330.0	16.4	8.2	7.5	2.5	12.0	16.0	Q1
SN74ABT573ADWR	SOIC	DW	20	2000	330.0	24.4	10.8	13.3	2.7	12.0	24.0	Q1
SN74ABT573APWR	TSSOP	PW	20	2000	330.0	16.4	6.95	7.1	1.6	8.0	16.0	Q1
SN74ABT573ARGYR	VQFN	RGY	20	3000	330.0	12.4	3.8	4.8	1.6	8.0	12.0	Q1

TAPE AND REEL BOX DIMENSIONS

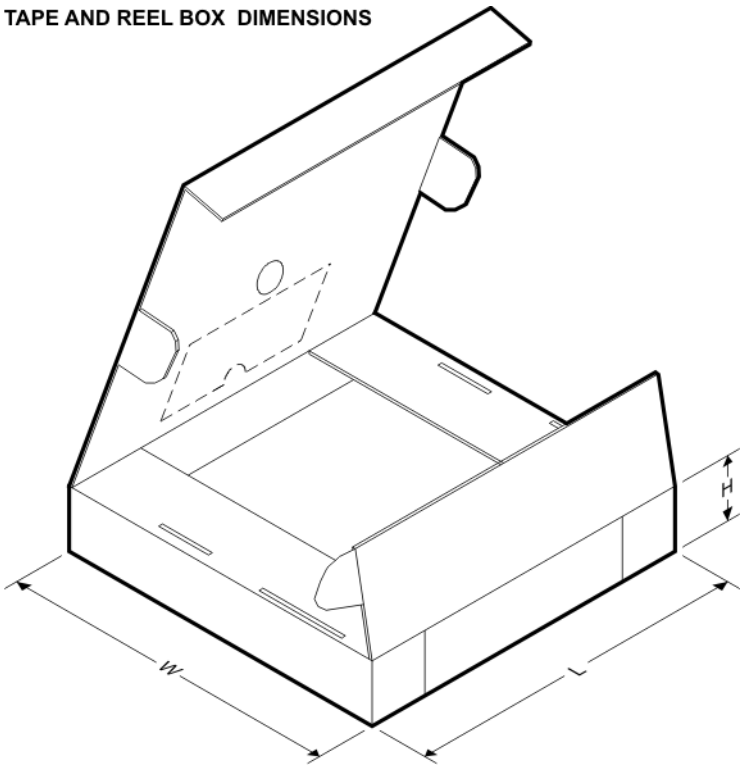

*All dimensions are nominal

Device	Package Type	Package Drawing	Pins	SPQ	Length (mm)	Width (mm)	Height (mm)
SN74ABT573ADBR	SSOP	DB	20	2000	367.0	367.0	38.0
SN74ABT573ADWR	SOIC	DW	20	2000	367.0	367.0	45.0
SN74ABT573APWR	TSSOP	PW	20	2000	367.0	367.0	38.0
SN74ABT573ARGYR	VQFN	RGY	20	3000	367.0	367.0	35.0

W (R–GDFP–F20) CERAMIC DUAL FLATPACK

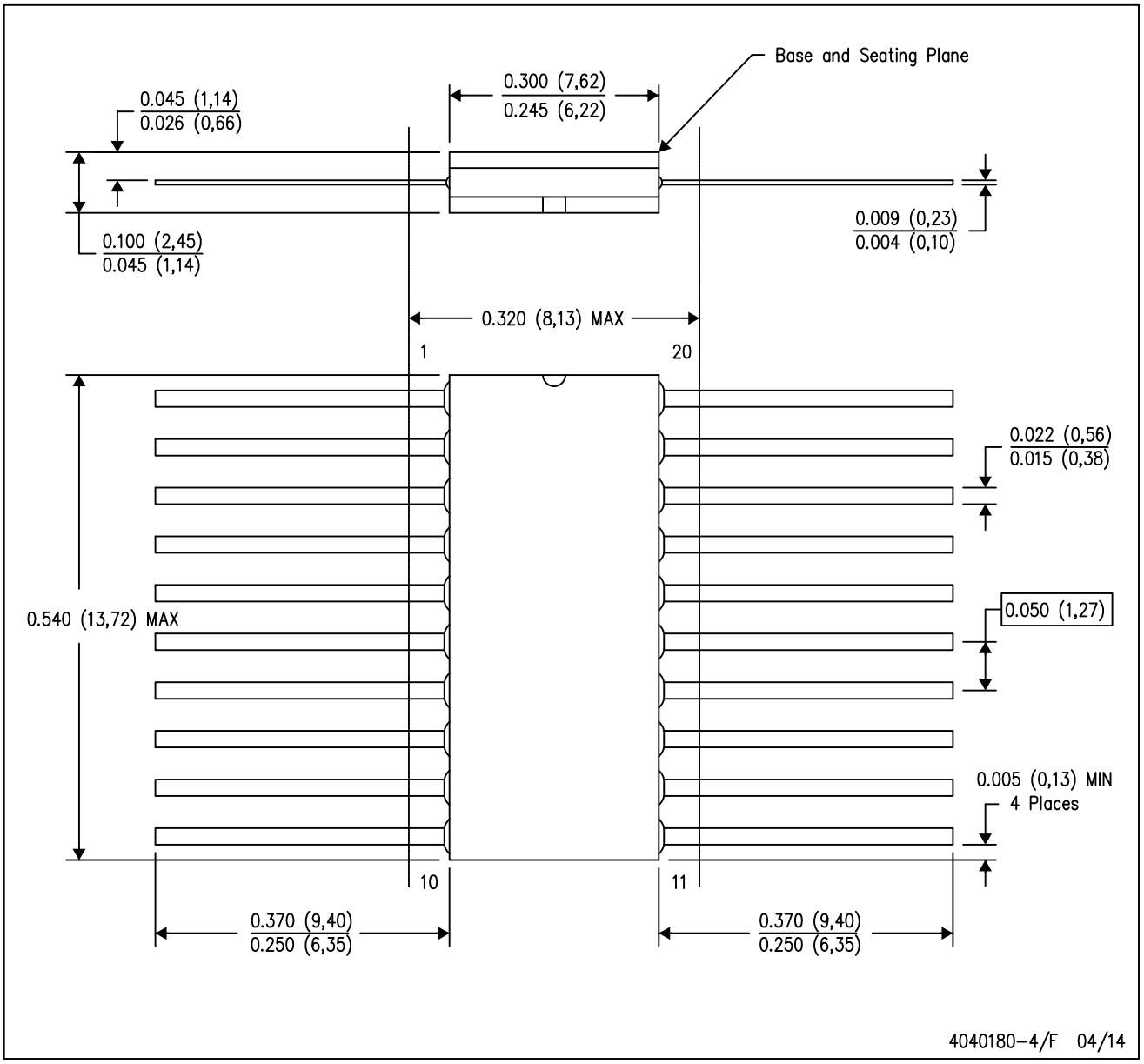

NOTES:
A. All linear dimensions are in inches (millimeters).
B. This drawing is subject to change without notice.
C. This package can be hermetically sealed with a ceramic lid using glass frit.
D. Index point is provided on cap for terminal identification only.
E. Falls within Mil–Std 1835 GDFP2–F20

FK (S–CQCC–N**) LEADLESS CERAMIC CHIP CARRIER

28 TERMINAL SHOWN

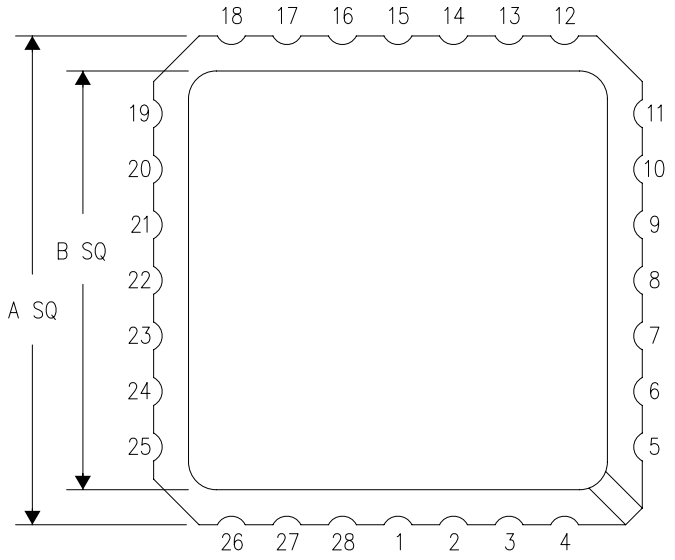

NO. OF TERMINALS **	A		B	
	MIN	MAX	MIN	MAX
20	0.342 (8,69)	0.358 (9,09)	0.307 (7,80)	0.358 (9,09)
28	0.442 (11,23)	0.458 (11,63)	0.406 (10,31)	0.458 (11,63)
44	0.640 (16,26)	0.660 (16,76)	0.495 (12,58)	0.560 (14,22)
52	0.740 (18,78)	0.761 (19,32)	0.495 (12,58)	0.560 (14,22)
68	0.938 (23,83)	0.962 (24,43)	0.850 (21,6)	0.858 (21,8)
84	1.141 (28,99)	1.165 (29,59)	1.047 (26,6)	1.063 (27,0)

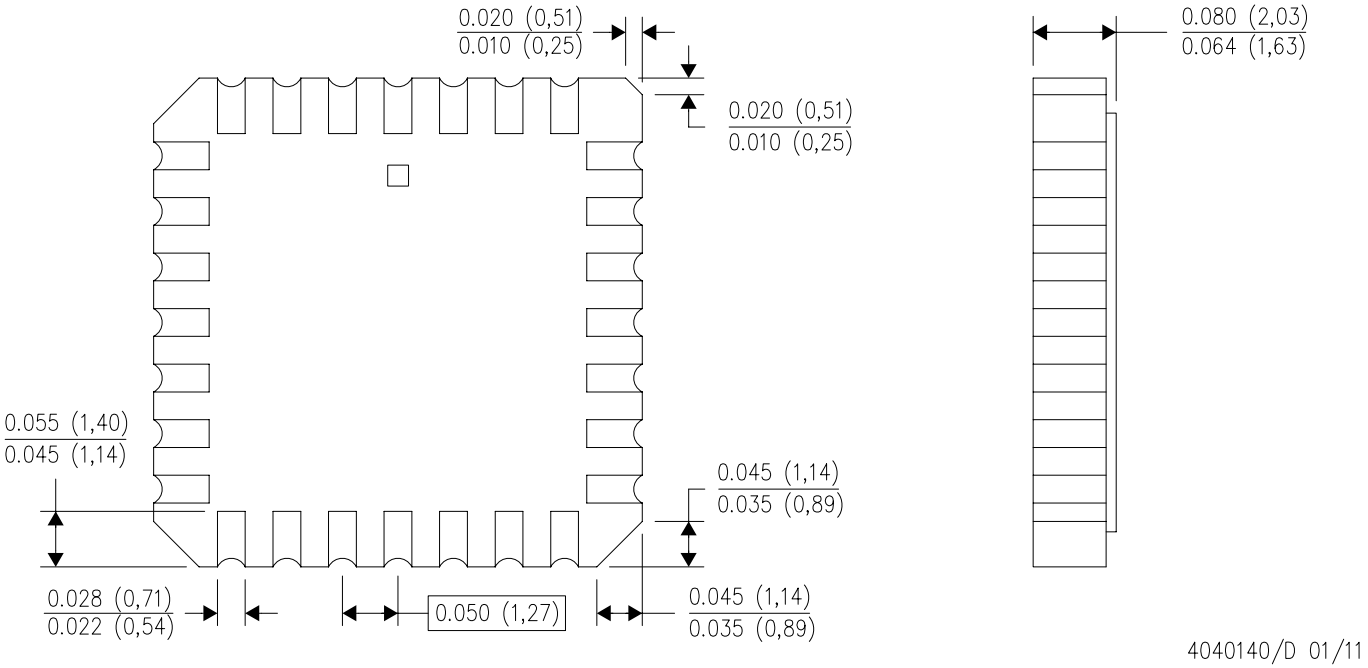

4040140/D 01/11

NOTES:
A. All linear dimensions are in inches (millimeters).
B. This drawing is subject to change without notice.
C. This package can be hermetically sealed with a metal lid.
D. Falls within JEDEC MS–004

RGY (R–PVQFN–N20) PLASTIC QUAD FLATPACK NO–LEAD

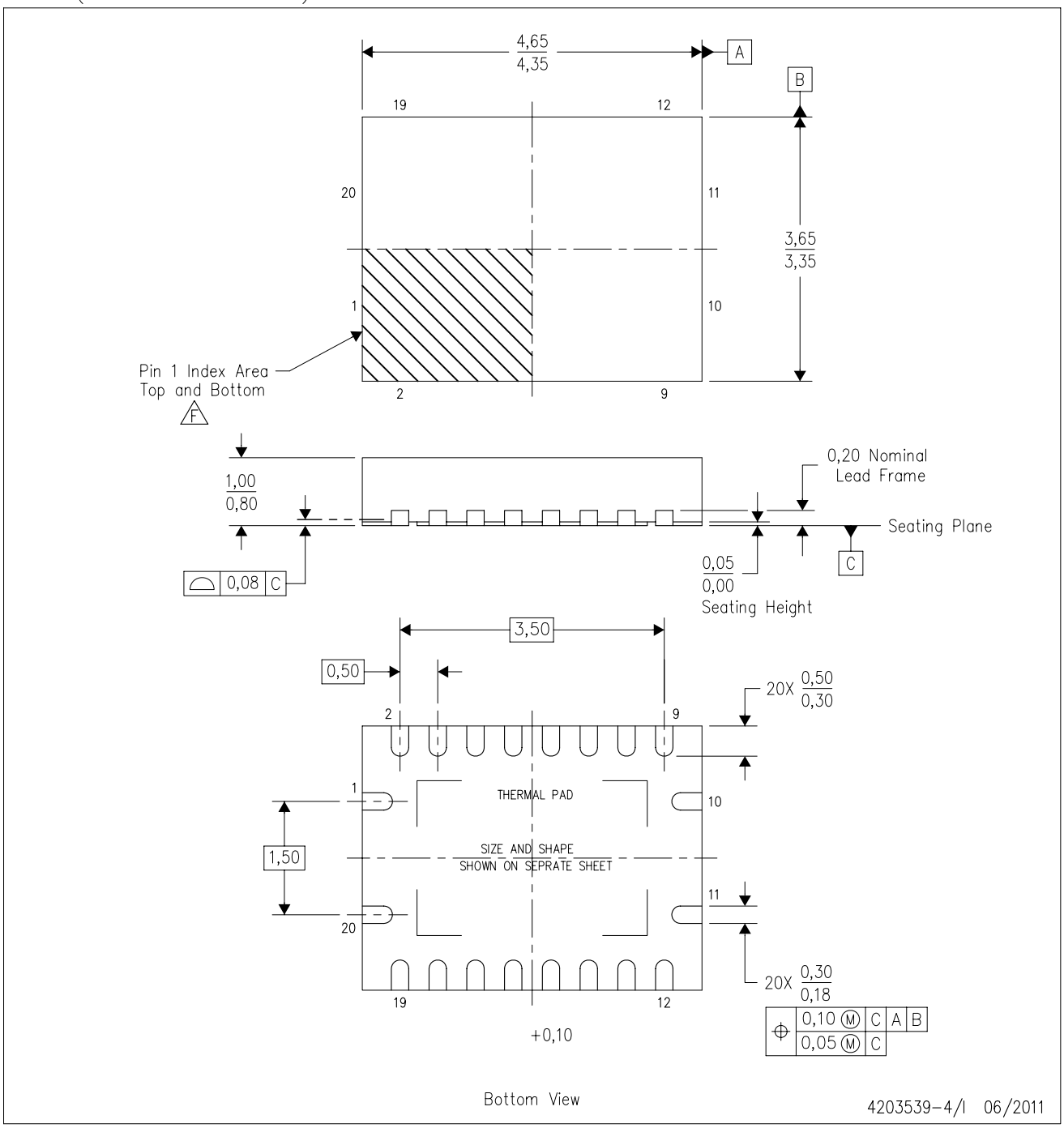

NOTES:
A. All linear dimensions are in millimeters. Dimensioning and tolerancing per ASME Y14.5M–1994.
B. This drawing is subject to change without notice.
C. QFN (Quad Flatpack No–Lead) package configuration.
D. The package thermal pad must be soldered to the board for thermal and mechanical performance.
E. See the additional figure in the Product Data Sheet for details regarding the exposed thermal pad features and dimensions.
F. Pin 1 identifiers are located on both top and bottom of the package and within the zone indicated. The Pin 1 identifiers are either a molded, marked, or metal feature.
G. Package complies to JEDEC MO–241 variation BA.

RGY (R–PVQFN–N20) PLASTIC QUAD FLATPACK NO–LEAD

THERMAL INFORMATION

This package incorporates an exposed thermal pad that is designed to be attached directly to an external heatsink. The thermal pad must be soldered directly to the printed circuit board (PCB). After soldering, the PCB can be used as a heatsink. In addition, through the use of thermal vias, the thermal pad can be attached directly to the appropriate copper plane shown in the electrical schematic for the device, or alternatively, can be attached to a special heatsink structure designed into the PCB. This design optimizes the heat transfer from the integrated circuit (IC).

For information on the Quad Flatpack No–Lead (QFN) package and its advantages, refer to Application Report, QFN/SON PCB Attachment, Texas Instruments Literature No. SLUA271. This document is available at www.ti.com.

The exposed thermal pad dimensions for this package are shown in the following illustration.

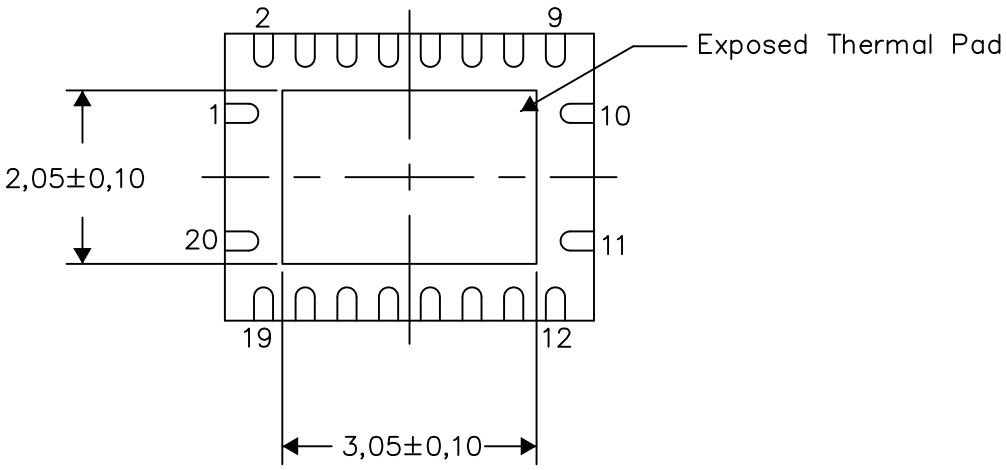

Bottom View

Exposed Thermal Pad Dimensions

4206353–4/P 03/14

NOTE: All linear dimensions are in millimeters

RGY (R–PVQFN–N20) PLASTIC QUAD FLATPACK NO–LEAD

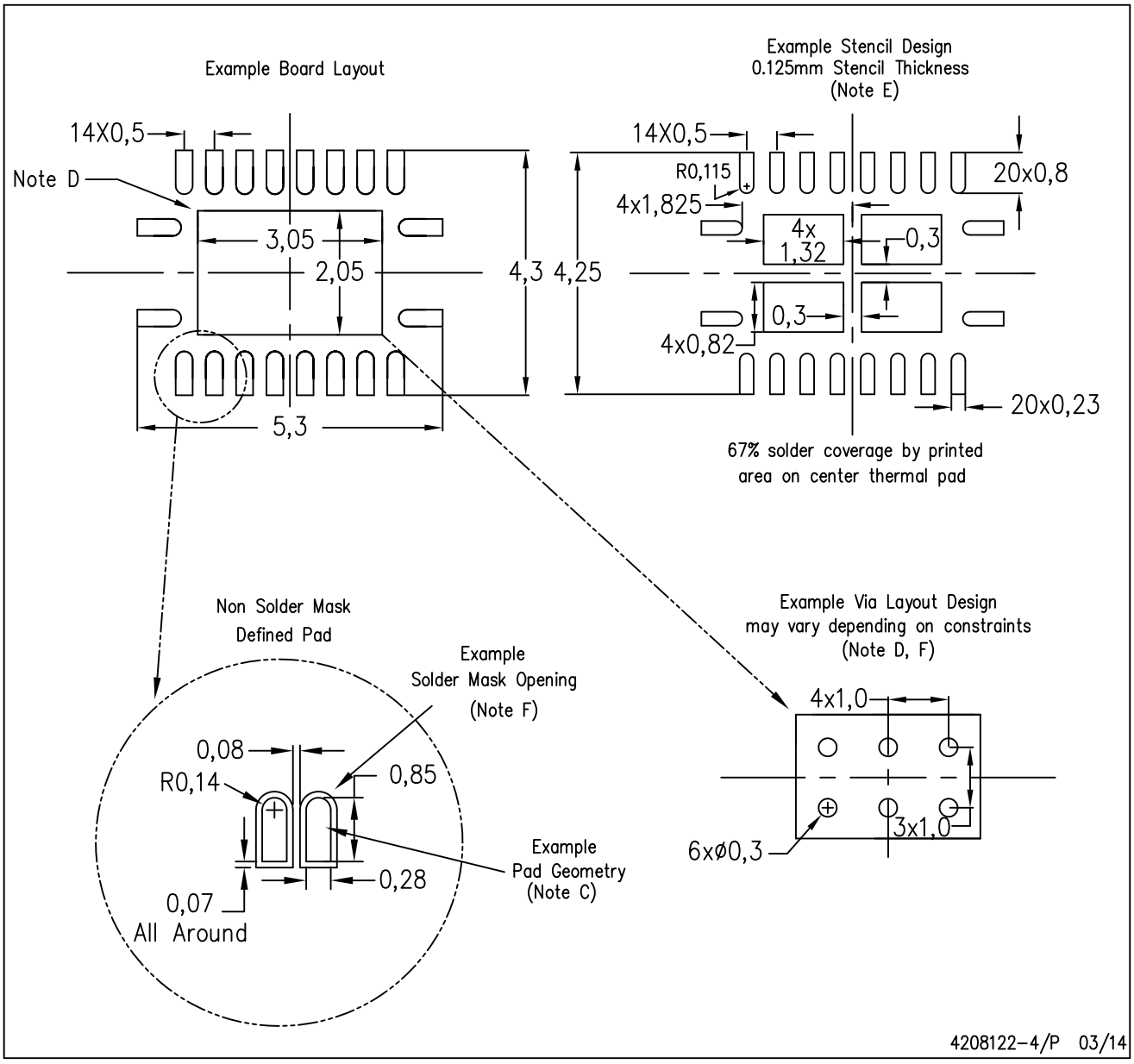

NOTES:
A. All linear dimensions are in millimeters.
B. This drawing is subject to change without notice.
C. Publication IPC–7351 is recommended for alternate designs.
D. This package is designed to be soldered to a thermal pad on the board. Refer to Application Note, Quad Flat–Pack QFN/SON PCB Attachment, Texas Instruments Literature No. SLUA271, and also the Product Data Sheets for specific thermal information, via requirements, and recommended board layout. These documents are available at www.ti.com <http: //www.ti.com>.
E. Laser cutting apertures with trapezoidal walls and also rounding corners will offer better paste release. Customers should contact their board assembly site for stencil design recommendations. Refer to IPC 7525 for stencil design considerations.
F. Customers should contact their board fabrication site for minimum solder mask web tolerances between signal pads.

J (R–GDIP–T**)

14 LEADS SHOWN

CERAMIC DUAL IN–LINE PACKAGE

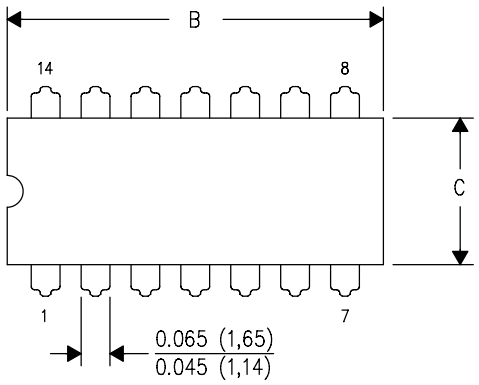

DIM \ PINS **	14	16	18	20
A	0.300 (7,62) BSC	0.300 (7,62) BSC	0.300 (7,62) BSC	0.300 (7,62) BSC
B MAX	0.785 (19,94)	.840 (21,34)	0.960 (24,38)	1.060 (26,92)
B MIN	—	—	—	—
C MAX	0.300 (7,62)	0.300 (7,62)	0.310 (7,87)	0.300 (7,62)
C MIN	0.245 (6,22)	0.245 (6,22)	0.220 (5,59)	0.245 (6,22)

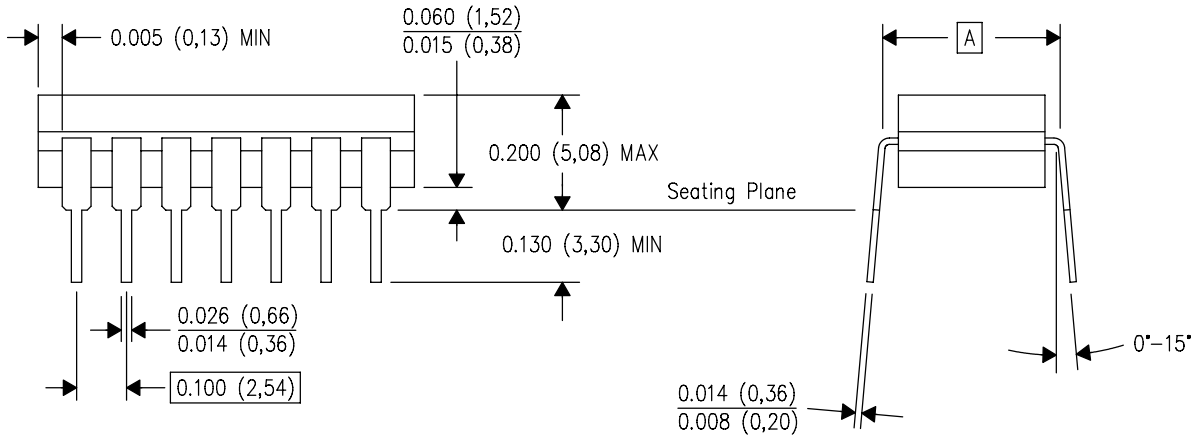

4040083/F 03/03

NOTES:
A. All linear dimensions are in inches (millimeters).
B. This drawing is subject to change without notice.
C. This package is hermetically sealed with a ceramic lid using glass frit.
D. Index point is provided on cap for terminal identification only on press ceramic glass frit seal only.
E. Falls within MIL STD 1835 GDIP1–T14, GDIP1–T16, GDIP1–T18 and GDIP1–T20.

PW (R–PDSO–G20) PLASTIC SMALL OUTLINE

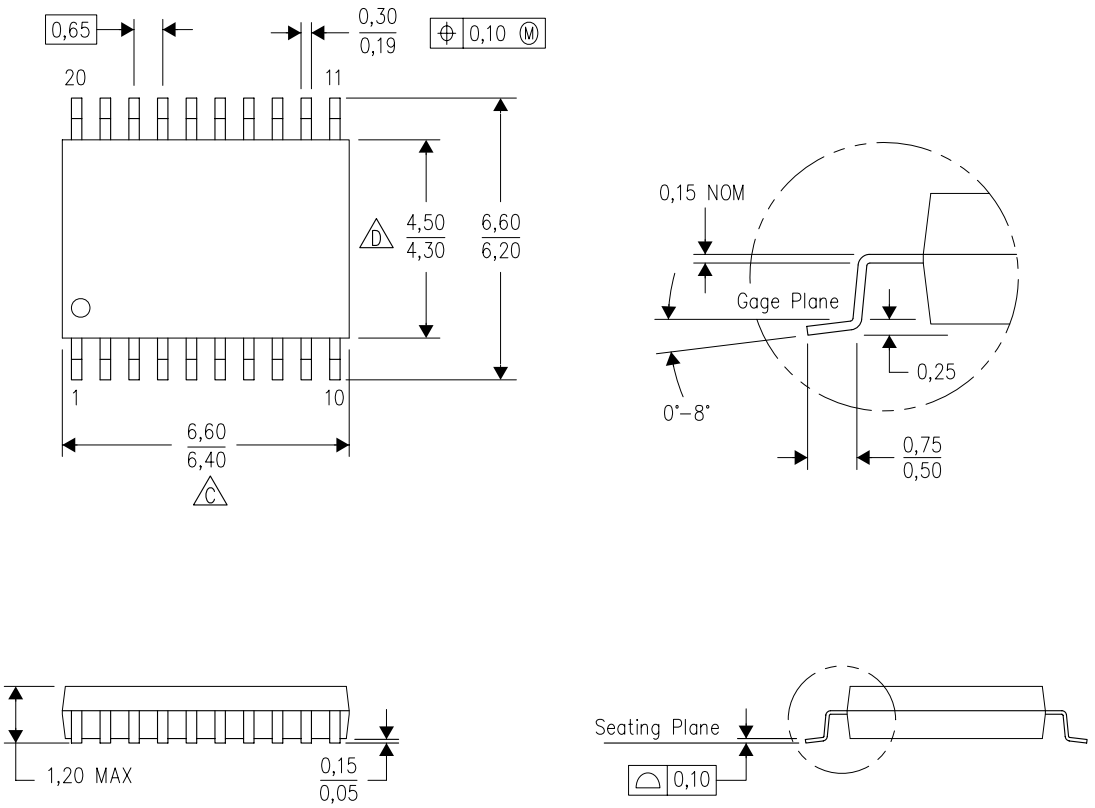

4040064–5/G 02/11

NOTES:
A. All linear dimensions are in millimeters. Dimensioning and tolerancing per ASME Y14.5M–1994.
B. This drawing is subject to change without notice.
C. Body length does not include mold flash, protrusions, or gate burrs. Mold flash, protrusions, or gate burrs shall not exceed 0,15 each side.
D. Body width does not include interlead flash. Interlead flash shall not exceed 0,25 each side.
E. Falls within JEDEC MO–153

PW (R–PDSO–G20) PLASTIC SMALL OUTLINE

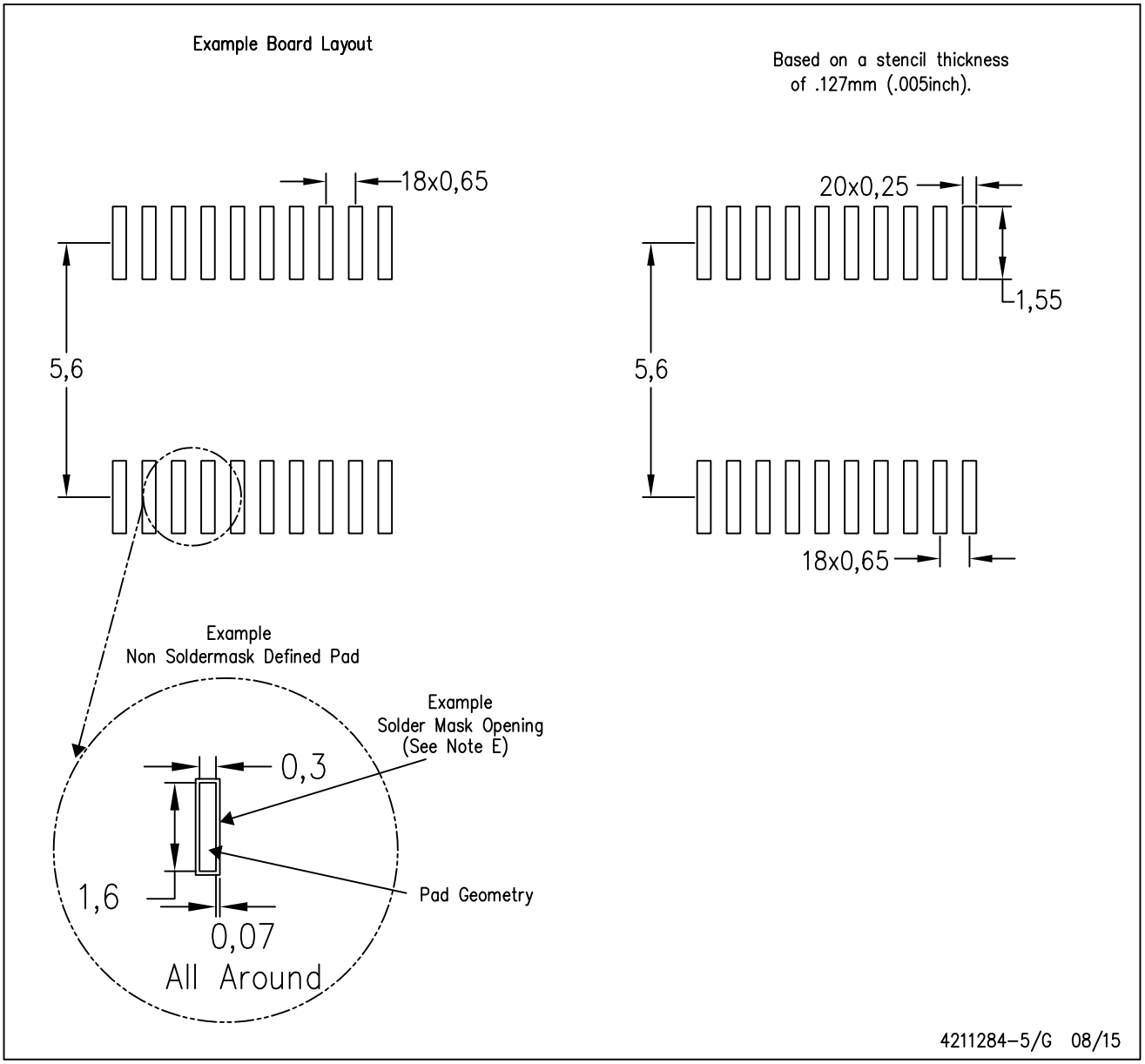

NOTES:
A. All linear dimensions are in millimeters.
B. This drawing is subject to change without notice.
C. Publication IPC–7351 is recommended for alternate design.
D. Laser cutting apertures with trapezoidal walls and also rounding corners will offer better paste release. Customers should contact their board assembly site for stencil design recommendations. Refer to IPC–7525 for other stencil recommendations.
E. Customers should contact their board fabrication site for solder mask tolerances between and around signal pads.

PACKAGE OUTLINE

DB0020A

TSSOP - 2 mm max height

SMALL OUTLINE PACKAGE

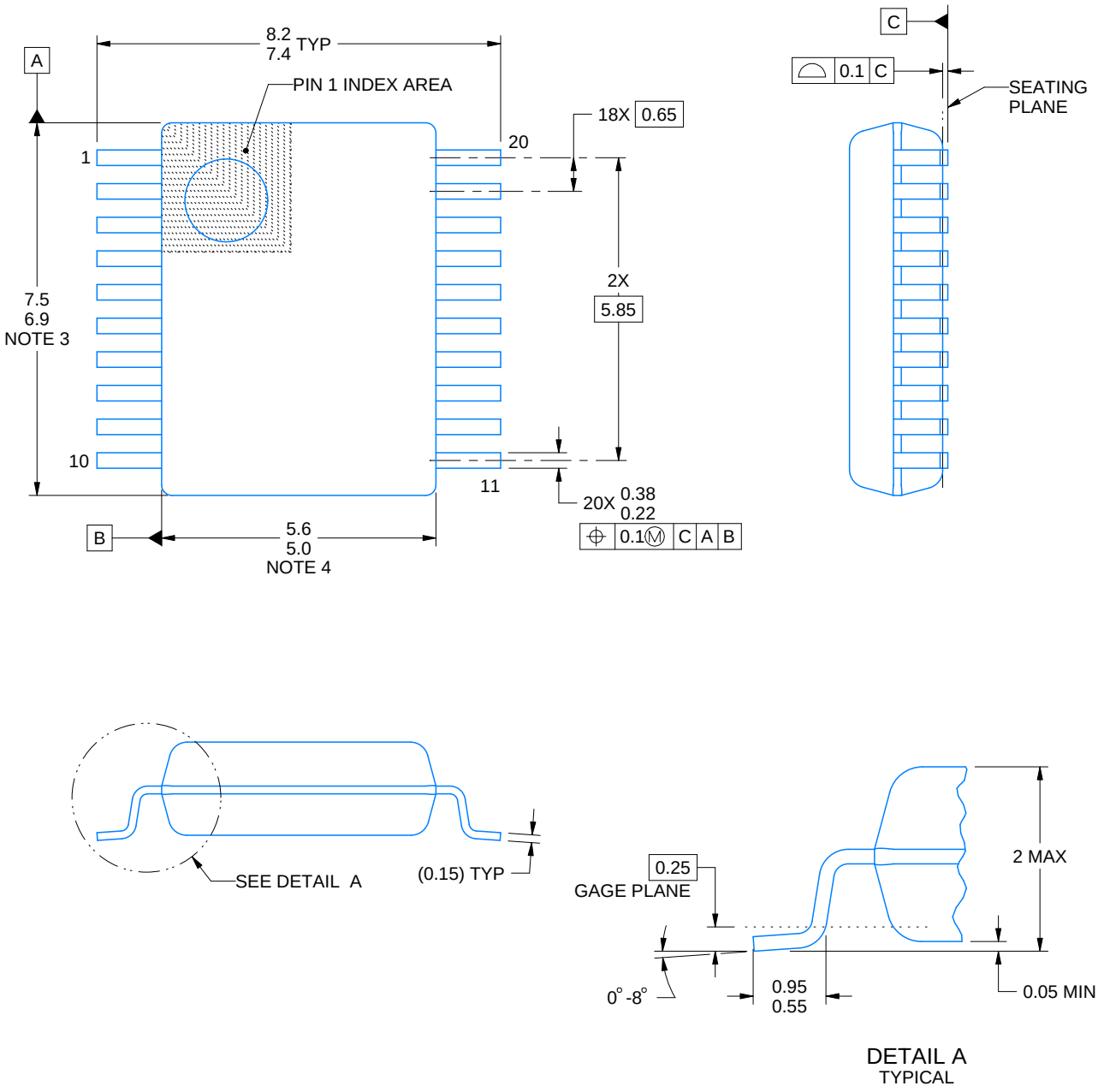

NOTES:

1. All linear dimensions are in millimeters. Any dimensions in parenthesis are for reference only. Dimensioning and tolerancing per ASME Y14.5M.
2. This drawing is subject to change without notice.
3. This dimension does not include mold flash, protrusions, or gate burrs. Mold flash, protrusions, or gate burrs shall not exceed 0.15 mm per side.
4. This dimension does not include interlead flash. Interlead flash shall not exceed 0.25 mm per side.
5. Reference JEDEC registration MO-150.

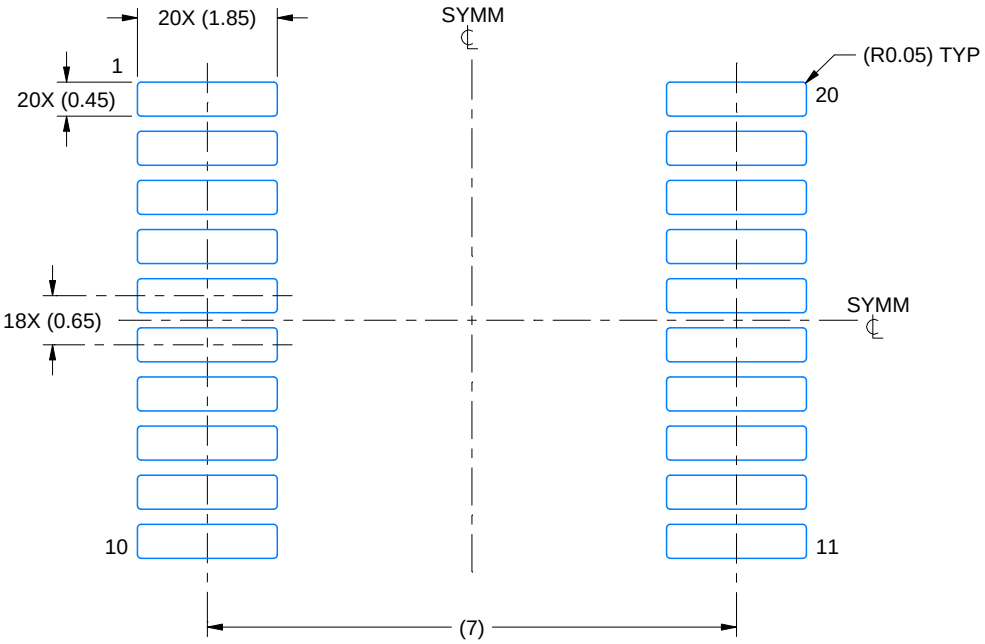

LAND PATTERN EXAMPLE
EXPOSED METAL SHOWN
SCALE: 10X

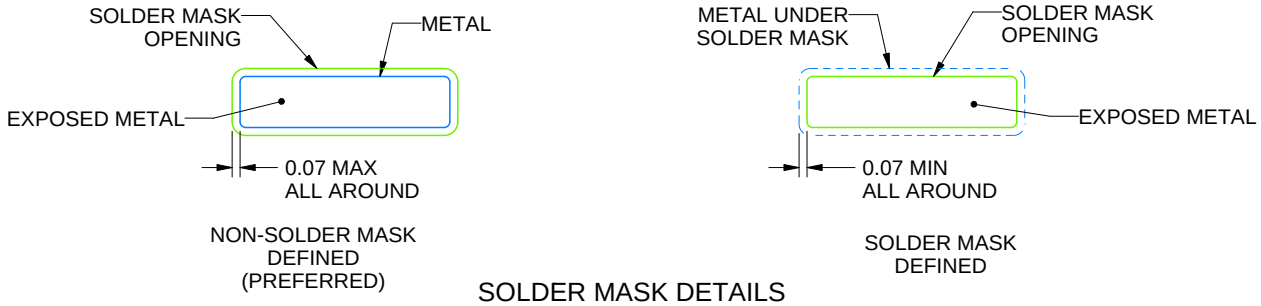

SOLDER MASK DETAILS

4214851/A 12/2017

NOTES: (continued)

6. Publication IPC-7351 may have alternate designs.
7. Solder mask tolerances between and around signal pads can vary based on board fabrication site.

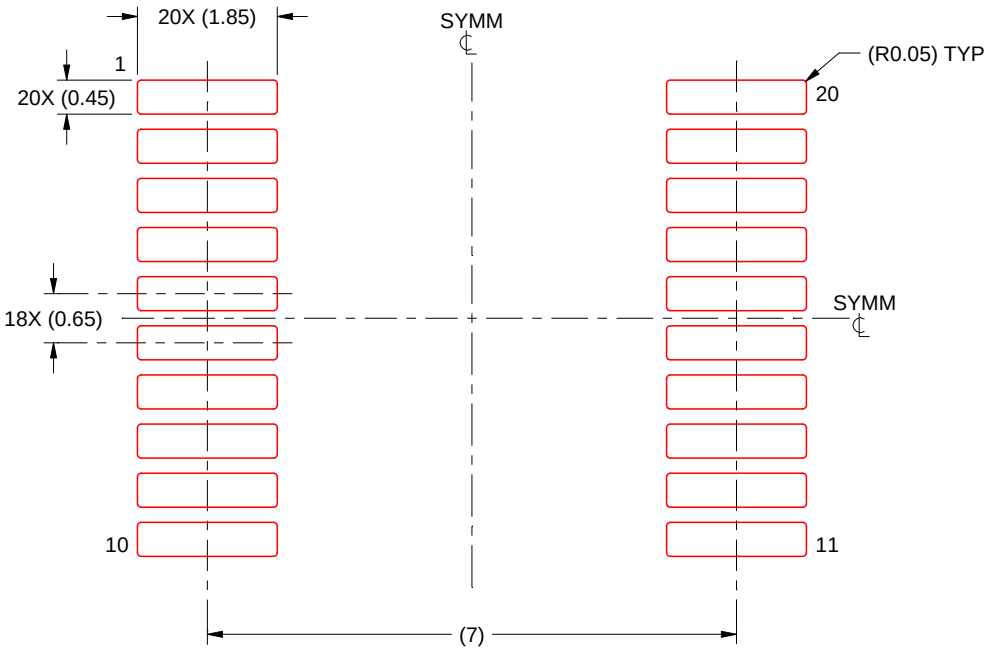

SOLDER PASTE EXAMPLE
BASED ON 0.125 mm THICK STENCIL
SCALE: 10X

4214851/A 12/2017

NOTES: (continued)

8. Laser cutting apertures with trapezoidal walls and rounded corners may offer better paste release. IPC-7525 may have alternate design recommendations.
9. Board assembly site may have different recommendations for stencil design.

N (R–PDIP–T**)

PLASTIC DUAL–IN–LINE PACKAGE

16 PINS SHOWN

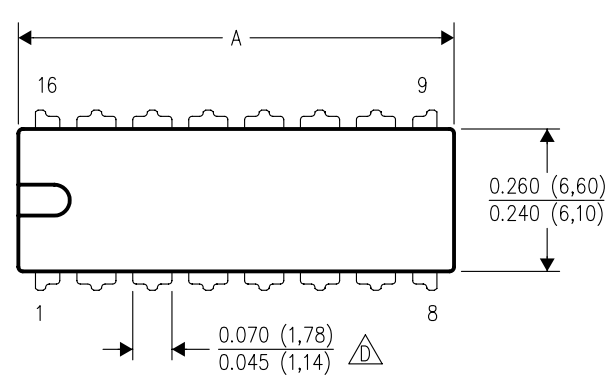

DIM \ PINS **	14	16	18	20
A MAX	0.775 (19,69)	0.775 (19,69)	0.920 (23,37)	1.060 (26,92)
A MIN	0.745 (18,92)	0.745 (18,92)	0.850 (21,59)	0.940 (23,88)
MS–001 VARIATION (C)	AA	BB	AC	AD

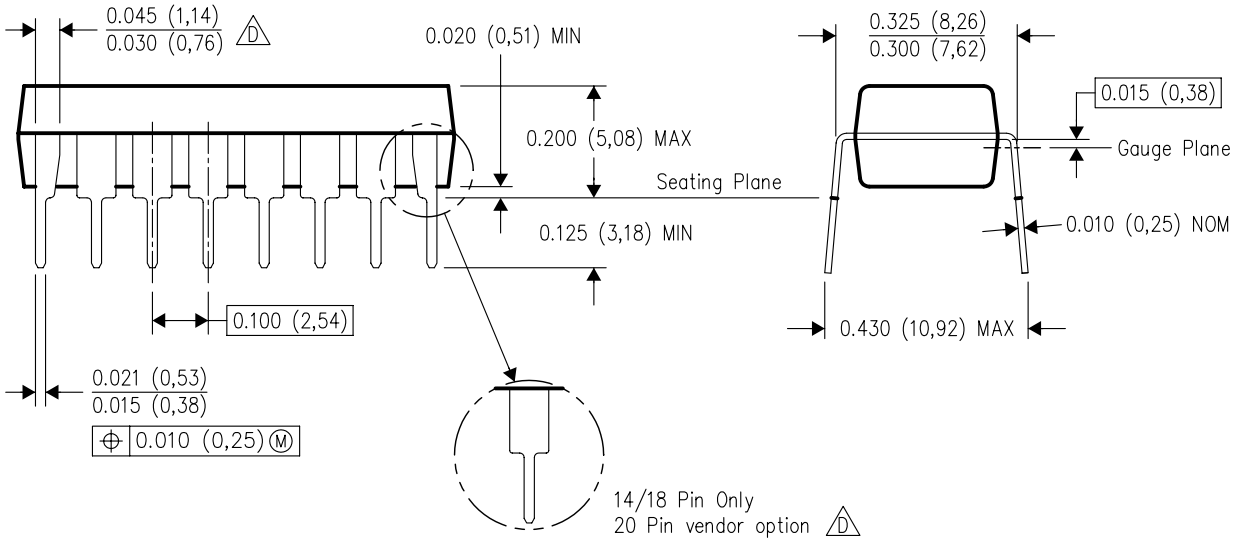

4040049/E 12/2002

NOTES:
A. All linear dimensions are in inches (millimeters).
B. This drawing is subject to change without notice.
C. Falls within JEDEC MS–001, except 18 and 20 pin minimum body length (Dim A).
D. The 20 pin end lead shoulder width is a vendor option, either half or full width.

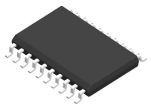

PACKAGE OUTLINE

DW0020A

SOIC - 2.65 mm max height

SOIC

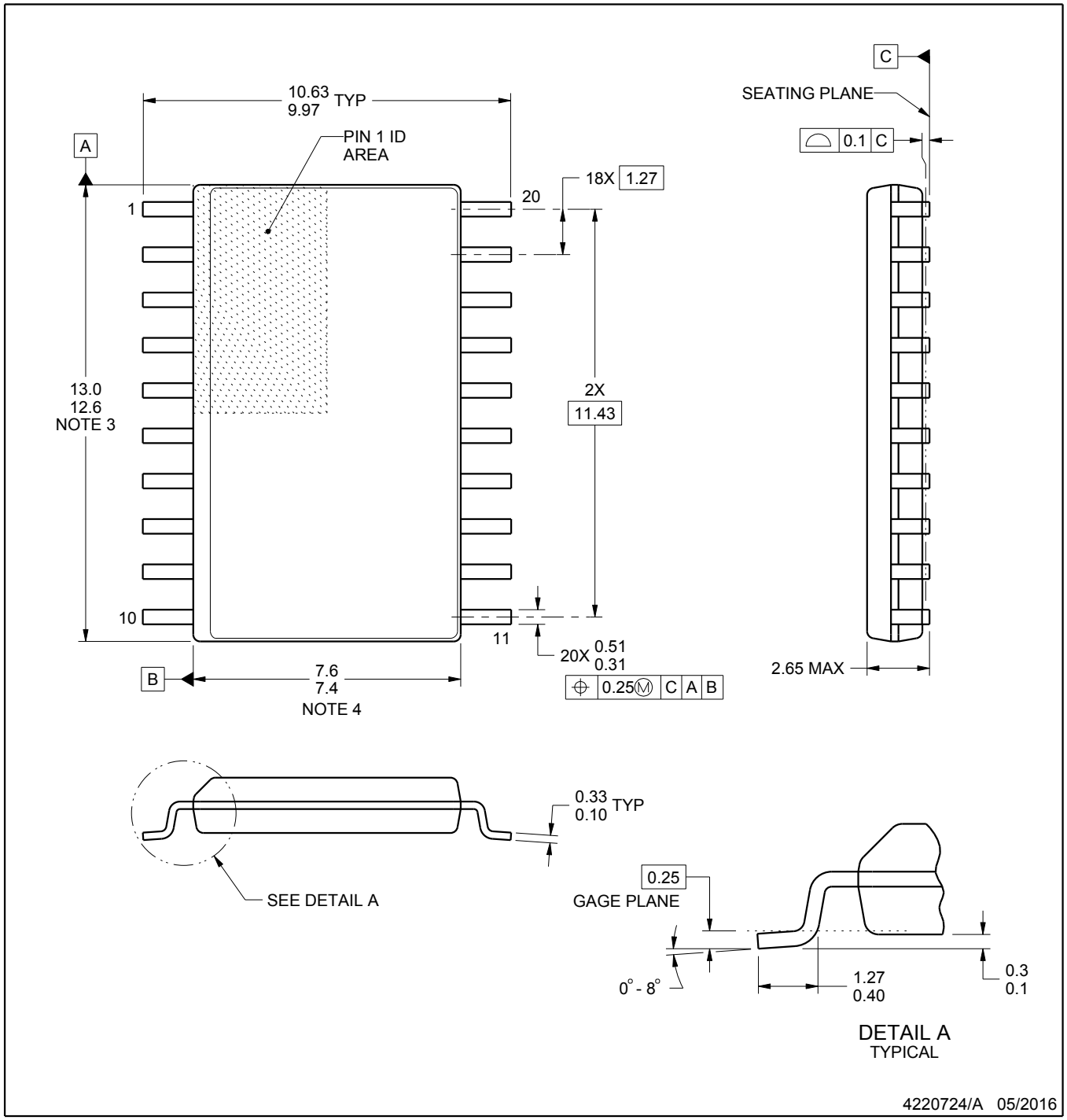

NOTES:

1. All linear dimensions are in millimeters. Dimensions in parenthesis are for reference only. Dimensioning and tolerancing per ASME Y14.5M.
2. This drawing is subject to change without notice.
3. This dimension does not include mold flash, protrusions, or gate burrs. Mold flash, protrusions, or gate burrs shall not exceed 0.15 mm per side.
4. This dimension does not include interlead flash. Interlead flash shall not exceed 0.43 mm per side.
5. Reference JEDEC registration MS-013.

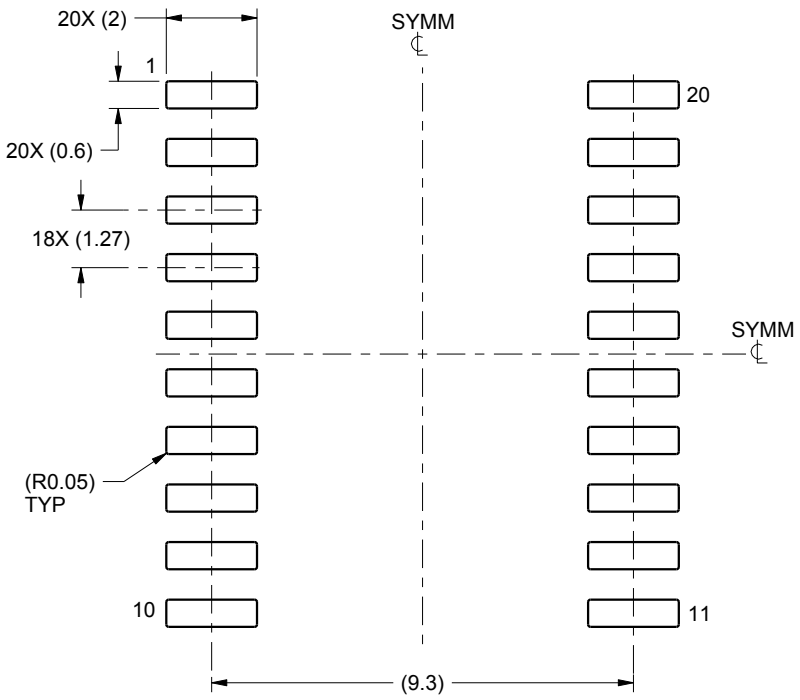

LAND PATTERN EXAMPLE
SCALE:6X

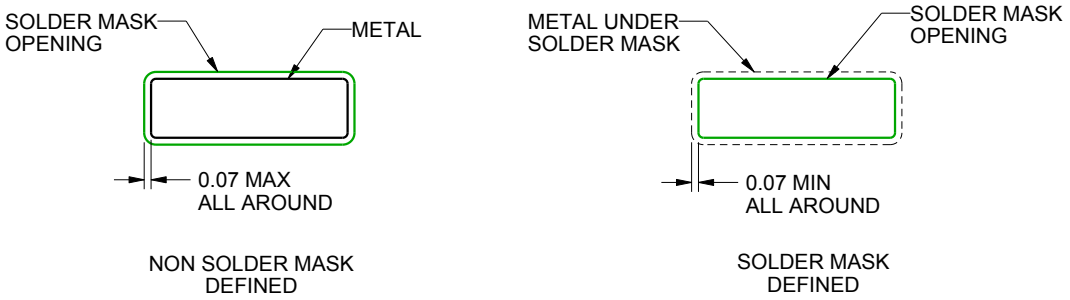

SOLDER MASK DETAILS

4220724/A 05/2016

NOTES: (continued)

6. Publication IPC-7351 may have alternate designs.
7. Solder mask tolerances between and around signal pads can vary based on board fabrication site.

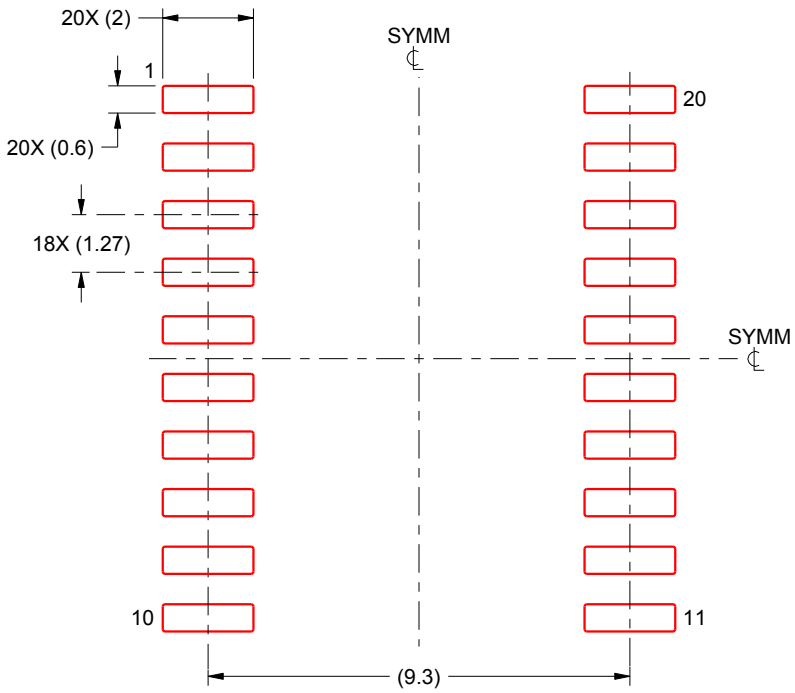

SOLDER PASTE EXAMPLE
BASED ON 0.125 mm THICK STENCIL
SCALE:6X

4220724/A 05/2016

NOTES: (continued)

8. Laser cutting apertures with trapezoidal walls and rounded corners may offer better paste release. IPC-7525 may have alternate design recommendations.
9. Board assembly site may have different recommendations for stencil design.

IMPORTANT NOTICE AND DISCLAIMER

TI PROVIDES TECHNICAL AND RELIABILITY DATA (INCLUDING DATASHEETS), DESIGN RESOURCES (INCLUDING REFERENCE DESIGNS), APPLICATION OR OTHER DESIGN ADVICE, WEB TOOLS, SAFETY INFORMATION, AND OTHER RESOURCES “AS IS” AND WITH ALL FAULTS, AND DISCLAIMS ALL WARRANTIES, EXPRESS AND IMPLIED, INCLUDING WITHOUT LIMITATION ANY IMPLIED WARRANTIES OF MERCHANTABILITY, FITNESS FOR A PARTICULAR PURPOSE OR NON-INFRINGEMENT OF THIRD PARTY INTELLECTUAL PROPERTY RIGHTS.

These resources are intended for skilled developers designing with TI products. You are solely responsible for (1) selecting the appropriate TI products for your application, (2) designing, validating and testing your application, and (3) ensuring your application meets applicable standards, and any other safety, security, or other requirements. These resources are subject to change without notice. TI grants you permission to use these resources only for development of an application that uses the TI products described in the resource. Other reproduction and display of these resources is prohibited. No license is granted to any other TI intellectual property right or to any third party intellectual property right. TI disclaims responsibility for, and you will fully indemnify TI and its representatives against, any claims, damages, costs, losses, and liabilities arising out of your use of these resources.

TI’s products are provided subject to TI’s Terms of Sale (www.ti.com/legal/termsofsale.html) or other applicable terms available either on ti.com or provided in conjunction with such TI products. TI’s provision of these resources does not expand or otherwise alter TI’s applicable warranties or warranty disclaimers for TI products.

Mailing Address: Texas Instruments, Post Office Box 655303, Dallas, Texas 75265
Copyright © 2018, Texas Instruments Incorporated