DAC1282 面向抗震应用的低失真数模转换器

1 特性

- 单芯片测试信号生成器
- 缓冲电压输出
- 高性能：
  - 总谐波失真(THD)：–125dB (G=1/1至1/8)
  - 信噪比(SNR)：120dB(413Hz BW，G=1/1)
- 模拟和数字增益控制
- 输出频率：0.488Hz至250Hz
- 正弦，脉冲，和直流(DC)模式
- 数字数据输入模式
- 低导通电阻信号开关
- 同步输入
- 省电模式
- 模拟电源：5V或者±2.5V
- 数字电源：1.8V至3.3V
- 功率：38mW
- 封装方式：24引脚薄型小尺寸封装(TSSOP)
- 运行温度范围：–50°C至+125°C

2 应用

- 能量勘探
- 地震监测系统
- 高精度仪器

3 说明

DAC1282是一款全集成数模转换器(DAC)，此转换器可提供低失真，数字合成电压输出，适合于测震设备的测试。 DAC1282可在低功率小型封装内实现非常高的性能。 与高性能ADS1281和ADS1282模数转换器(ADS)一起，这些器件可以创建一个满足地震数据采集设备严格要求的测量系统。

DAC1282集成了一个数字信号生成器，一个DAC，和一个可生成正弦波，dc，和脉冲输出电压的输出放大器。

输出频率可编程范围为0.5Hz至250Hz之间并且震级由模拟和数字控制进行计算。 模拟增益和数字增益分别可在6dB步长和0.5dB步长内调节。 模拟增益设置与ADS1282上那些用于高分辨率增益下测试的设置相匹配。

DAC1282还提供脉冲输出。 用户可对脉冲振幅进行编程，然后由引脚做出选择并进行精确计时。 通过采用一个外部比特流样式可生成定制输出信号。

一个信号开关可将DAC输出连接至传感器，此传感器用于THD和脉冲测试。 开关计时受引脚和命令控制。

同步(SYNC)引脚使DAC输出与模数转换器(ADC)采样间隔同步。 省电输入会将此器件关闭，从而将功耗减少到毫瓦(microwatt)级。

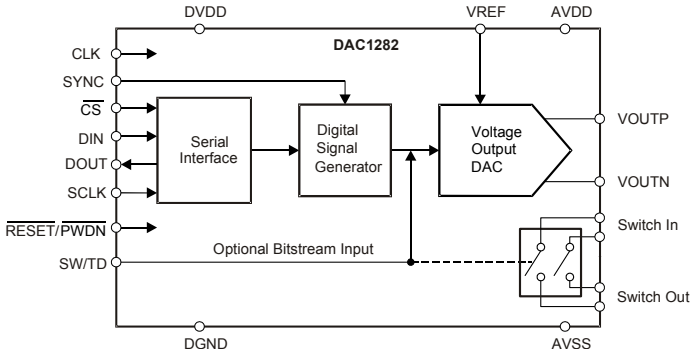

An IMPORTANT NOTICE at the end of this data sheet addresses availability, warranty, changes, use in safety-critical applications, intellectual property matters and other important disclaimers. PRODUCTION DATA.

目录

1 特性 ... 1
2 应用 ... 1
3 说明 ... 1
4 修订历史记录 ... 2
5 **Device Comparison** ... 3
6 **Pin Configuration and Functions** ... 3
7 **Specifications** ... 4
7.1 Absolute Maximum Ratings ... 4
7.2 ESD Ratings ... 4
7.3 Thermal Information ... 4
7.4 Electrical Characteristics ... 5
7.5 Timing Requirements: Serial Peripheral Interface (SPI) Timing ... 8
7.6 Typical Characteristics ... 9
8 **Detailed Description** ... 14
8.1 Overview ... 14
8.2 Feature Description ... 16
8.3 Device Functional Modes ... 30
8.4 Programming ... 31
8.5 Register Map ... 33
9 **Application and Implementation** ... 36
9.1 Application Information ... 36
9.2 Typical Applications ... 37
10 器件和文档支持 ... 39
10.1 Community Resources ... 39
10.2 商标 ... 39
10.3 静电放电警告 ... 39
10.4 术语表 ... 39
11 机械、封装和可订购信息 ... 39

4 修订历史记录

NOTE: Page numbers for previous revisions may differ from page numbers in the current version.

Changes from Revision A (September 2012) to Revision B	Page
• 已添加 ADS1282A 器件至数据手册	1

Changes from Original (December 2011) to Revision A	Page
• Updated Figure 16	10
• Added last paragraph to *Signal Output* section	16
• Changed t_{CSHD} minimum specification in Table 11	25
• Changed min, max, and unit columns in Table 12	26

Copyright © 2011–2015, Texas Instruments Incorporated

5 Device Comparison

DEVICE	DESCRIPTION
ADS1281	High-resolution ADC
ADS1282	High-resolution ADC with PGA
REF5050	Low-drift 5 V reference

6 Pin Configuration and Functions

PW Package
24-Pin TSSOP
Top VIew

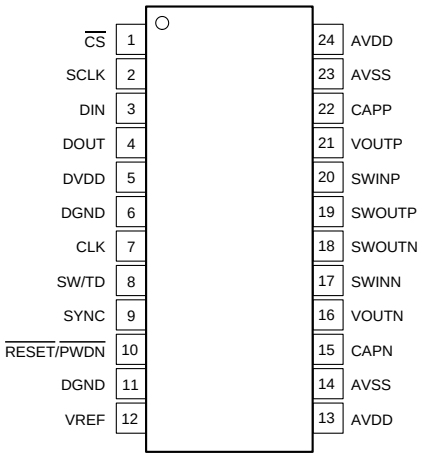

Pin Functions

PIN		FUNCTION	DESCRIPTION
NAME	NO.		
AVDD	13, 24	Analog supply	Analog positive power supply
AVSS	14	Analog supply	Analog negative power supply, reference ground
AVSS	23	Analog supply	Analog negative power supply
CAPN	15	Analog	External capacitor connected to VOUTN
CAPP	22	Analog	External capacitor connected to VOUTP
$\overline{CS}$	1	Digital input	Serial port chip select
CLK	7	Digital input	Master clock 4.096 MHz
DGND	6	Ground	Key digital ground
DGND	11	Ground	Digital ground
DIN	3	Digital input	Serial port data input
DOUT	4	Digital output	Serial port data output
DVDD	5	Digital supply	Digital power supply: 1.65 V to 3.6 V
$\overline{RESET}/\overline{PWDN}$	10	Digital input	Reset/power-down input
SCLK	2	Digital input	Serial port shift clock
SW/TD	8	Digital input	Switch control input or bitstream input
SWINN	17	Analog I/O	Switch negative input
SWINP	20	Analog I/O	Switch positive input
SWOUTN	18	Analog I/O	Switch negative output
SWOUTP	19	Analog I/O	Switch positive output
SYNC	9	Digital input	Synchronize input
VOUTN	16	Analog output	Negative voltage output
VOUTP	21	Analog output	Positive voltage output
VREF	12	Analog input	Reference voltage input

Copyright © 2011–2015, Texas Instruments Incorporated

7 Specifications

7.1 Absolute Maximum Ratings[(1)]

Over operating free-air temperature range, unless otherwise noted.

	MIN	MAX	UNIT
AVDD to AVSS	–0.3	+5.5	V
AVSS to DGND	–2.8	+0.3	V
DVDD to DGND	–0.3	+3.6	V
Input current continuous	–10	+10	mA
Analog input/output voltage	AVSS – 0.3	AVDD + 0.3	V
Switch current	–60	+60	mA
Digital input voltage to DGND	–0.3	DVDD + 0.3	V
Operating temperature range	–50	+125	°C
Storage temperature, T_{stg}	–60	+150	°C

(1) Stresses above these ratings may cause permanent damage. Exposure to absolute maximum conditions for extended periods may degrade device reliability. These are stress ratings only, and functional operation of the device at these or any other conditions beyond those specified is not implied.

7.2 ESD Ratings

			VALUE	UNIT
$V_{(ESD)}$	Electrostatic discharge	Human-body model (HBM), per ANSI/ESDA/JEDEC JS-001[(1)]	±2000	V
		Charged-device model (CDM), per JEDEC specification JESD22-C101[(2)]	±500	

(1) JEDEC document JEP155 states that 500-V HBM allows safe manufacturing with a standard ESD control process.
(2) JEDEC document JEP157 states that 250-V CDM allows safe manufacturing with a standard ESD control process.

7.3 Thermal Information

THERMAL METRIC[(1)]		PW (TSSOP) 24 PINS	UNIT
$R_{\theta JA}$	Junction-to-ambient thermal resistance	78.3	°C/W
$R_{\theta JC(top)}$	Junction-to-case (top) thermal resistance	12.1	
$R_{\theta JB}$	Junction-to-board thermal resistance	33.8	
ψ_{JT}	Junction-to-top characterization parameter	0.3	
ψ_{JB}	Junction-to-board characterization parameter	33.5	
$R_{\theta JC(bot)}$	Junction-to-case (bottom) thermal resistance	N/A	

(1) For more information about traditional and new thermal metrics, see the *IC Package Thermal Metrics* application report, SPRA953.

Copyright © 2011–2015, Texas Instruments Incorporated

7.4 Electrical Characteristics

Minimum and maximum specifications are at T_A = –40°C to +85°C. Typical specifications are at T_A = +25°C, AVDD = +2.5 V, AVSS = –2.5 V, f_{CLK} = 4.096 MHz, V_{REF} = 5 V, and DVDD = 3.3 V (unless otherwise noted). Refer to Figure 50. DAC1282A supports gains = 1/1, 1/4, and 1/16 only.

PARAMETER			TEST CONDITIONS	MIN	TYP	MAX	UNIT
ANALOG OUTPUT (VOUTP, VOUTN)							
	Full-scale output voltage(1)		Gain = 1/1 to 1/64		$\pm V_{REF}$ /2 × gain		V
	Output common-mode voltage(2)				–0.1		V
	Differential output impedance				1.6		Ω
C_{LOAD}	Capacitive load					2	nF
R_{LOAD}	Resistive load			100			Ω
	Output current limit(3)				±60		mA
	High-Z output leakage		T_A = +25°C		2		nA
			T_A = +85°C		50		
DC PERFORMANCE (Excluding Pulse Mode)							
	Gain error		Gain = 1/1		±0.1%	±0.75%	
	Gain match		Relative to gain = 1/1		±0.05%	±0.5%	
	Gain drift				2		ppm/°C
	Offset		Gain = 1/1 to 1/64		±(7/gain) + 50	±(75/gain) + 300	ppm FSR(4)
	Offset drift				1.5		ppm FSR/°C
AC PERFORMANCE							
THD	Total harmonic distortion(5)	DAC1282	Gain = 1/1		–125	–118	dB
			Gain = 1/2, 1/4, 1/8		–125		dB
			Gain = 1/16		–123		dB
			Gain = 1/32		–115		dB
			Gain = 1/64		–111		dB
		DAC1282A	Gain = 1/1		–118	–106	dB
			Gain = 1/4, 1/16		–118		dB
SNR	Signal-to-noise ratio(6)		Gain = 1/1	116	120		dB
			Gain = 1/2		119		dB
			Gain = 1/4		117		dB
			Gain = 1/8		114		dB
			Gain = 1/16		110		dB
			Gain = 1/32		106		dB
			Gain = 1/64		100		dB
	Output frequency			0.4883		250	Hz
	Digital gain		0.5-dB steps	Full mute		0	dB
PSR	Power-supply rejection	AVDD, AVSS	60-Hz ac, gain = 1/8		85		dB
		DVDD			120		dB

(1) Full-scale differential output voltage: V_{OUT} = (VOUTP – VOUTN) = $\pm V_{REF}$/2 × Gain. Gain is the DAC analog gain.
(2) Output common-mode voltage scales with analog supply voltage: V_{COM} = 0.48 × (AVDD – AVSS) + AVSS.
(3) Sink or source current limit of VOUTP and VOUTN.
(4) FSR – full-scale range = V_{REF} × gain.
(5) THD = total harmonic distortion. THD is measured by the ADS1282, and is the sum of first nine harmonics using complementing gain. f_{OUT} = 31.25 Hz, V_{OUT} – 0.5 dBFS, no load.
(6) SNR = signal-to-noise ratio. SNR is measured by the ADS1282 over a 413-Hz bandwidth using complementing gain. f_{OUT} = 31.25 Hz and V_{OUT} – 0.5 dBFS.

Copyright © 2011–2015, Texas Instruments Incorporated

Electrical Characteristics (continued)

Minimum and maximum specifications are at T_A = –40°C to +85°C. Typical specifications are at T_A = +25°C, AVDD = +2.5 V, AVSS = –2.5 V, f_{CLK} = 4.096 MHz, V_{REF} = 5 V, and DVDD = 3.3 V (unless otherwise noted). Refer to Figure 50. DAC1282A supports gains = 1/1, 1/4, and 1/16 only.

PARAMETER		TEST CONDITIONS	MIN	TYP	MAX	UNIT
PULSE MODE						
	Output levels	31 steps, approximate 3 dB per step	±0.0195		±2.5	V
	Gain error			±0.1%	±0.75%	
	Gain drift			3		ppm/°C
	Offset			±0.5	±3	mV
	Offset drift			3		µV/°C
	Output noise(7)			1.5		μV_{RMS}
	Slew rate			5		V/µs
	Settling time	0.1% final value		25		µs
DC MODE						
	Resolution			24		Bits
	Step response			100		µs
	DC noise(8)	Gain = 1/1		1.3		μV_{RMS}
		Gain = 1/2		1.4		μV_{RMS}
		Gain = 1/4		1.8		μV_{RMS}
		Gain = 1/8		2.7		μV_{RMS}
		Gain = 1/16		4.7		μV_{RMS}
		Gain = 1/32		8.5		μV_{RMS}
		Gain = 1/64		16		μV_{RMS}
DIGITAL DATA MODE						
	Data clock rate			f_{CLK}/16		Hz
	Ones-density full-scale modulation	+FS and –FS, respectively	25%		75%	
	Signal bandwidth	–3 dB		8.2		kHz
REFERENCE VOLTAGE INPUT (V_{REF})						
	Reference voltage, V_{REF} = VREF – AVSS		2.4	5	AVDD + 0.25	V
	Reference input impedance	Operating		220		kΩ
		Power-down		10		MΩ
SIGNAL SWITCH						
	Signal range		AVSS		AVDD	V
	Current	Continuous			±50	mA
	Differential on-resistance	V_{SWIN} , V_{SWOUT} = 0 V		2.8		Ω
	Differential on-resistance flatness	V_{SWIN}, V_{SWOUT} = AVDD to AVSS		0.7		Ω
	On-resistance match between outputs	V_{SWIN} , V_{SWOUT} = 0 V		0.04		Ω
	Off-leakage current(9)	T_A = +25°C		±0.1		nA
		T_A = +85°C		±5		
	Off-isolation(10)			120		dB
DIGITAL INPUT/OUTPUT (DVDD = 1.65 V to 3.6 V)						
	V_{OH}	I_{OH} = 1 mA	0.8 × DVDD			V
	V_{OL}	I_{OL} = 1 mA			0.2 × DVDD	V
	V_{IH}		0.8 × DVDD		DVDD	V
	V_{IL}		DGND		0.2 × DVDD	V
	Input hysteresis			0.5		V
	Input leakage				±10	µA
f_{CLK}	CLK Input		1	4.096	4.225	MHz

(7) V_{OUT} = 0 V. Pulse mode output noise is measured by the ADS1282, over a 413-Hz bandwidth using ADC gain = 1.
(8) V_{OUT} = 0 V. DC noise is measured by the ADS1282, over a 413-Hz bandwidth using complementing gain. DC noise is referred to a 1.77-V full-scale ADC output. Divide output-referred noise by the ADC gain to yield input-referred noise.
(9) Switch input or output voltage = AVDD – 0.5 V to AVSS + 0.5 V.
(10) f = 31.25 Hz, 1.77 V_{RMS}. Switch output loaded 2 x 10 kΩ to mid-supply range.

Copyright © 2011–2015, Texas Instruments Incorporated

Electrical Characteristics (continued)

Minimum and maximum specifications are at T_A = –40°C to +85°C. Typical specifications are at T_A = +25°C, AVDD = +2.5 V, AVSS = –2.5 V, f_{CLK} = 4.096 MHz, V_{REF} = 5 V, and DVDD = 3.3 V (unless otherwise noted). Refer to Figure 50. DAC1282A supports gains = 1/1, 1/4, and 1/16 only.

PARAMETER	TEST CONDITIONS	MIN	TYP	MAX	UNIT
POWER SUPPLY					
AVSS		–2.6		0	V
AVDD		AVSS + 4.75		AVSS + 5.25	V
DVDD		1.65		3.6	V
AVDD, AVSS current	Gain = 1/1, V_{OUT} = 0 V		7.4	8.5	mA (11)
	Pulse mode, V_{OUT} = 0 V		7		mA
	Shutdown		1	10	µA
DVDD current	Operating		180	300	µA
	Shutdown (12)		1	10	µA
Power	Operating		38	44	mW
	Shutdown (12)		10	85	µW
TEMPERATURE RANGE					
Specified temperature range		–40		+85	°C
Operating temperature range		–50		+125	°C
Storage temperature range		–65		+150	°C

(11) Analog supply current scales with gain as follows:
I_{AVDD} and I_{AVSS} = 0.016 × V_{REF} × (44 × Gain + 1) + 3.8 (mA).
(12) Digital inputs stopped and maintained at V_{IH} or V_{IL} level.

Copyright © 2011–2015, Texas Instruments Incorporated

7.5 Timing Requirements: Serial Peripheral Interface (SPI) Timing

At T_A = –40°C to +85°C and DVDD = 1.65 V to 3.6 V, unless otherwise noted.

		MIN	MAX	UNIT
t_{CSSC}	$\overline{CS}$ low to first SCLK: setup time(1)	30		ns
t_{SCLK}	SCLK period	120		ns
t_{SPWH}	SCLK pulse width: high	50		ns
t_{SPWL}	SCLK pulse width: low(2)	50		ns
			2^{18}	t_{CLK}
t_{DIST}	Valid DIN to SCLK high: setup time	40		ns
t_{DIHD}	Valid DIN to SCLK high: hold time	20		ns
t_{DOPD}	SCLK low to valid new DOUT: propagation delay(3)		40	ns
t_{DOHD}	SCLK low to DOUT invalid: hold time		0	ns
t_{CSDOD}	$\overline{CS}$ low to DOUT driven: propagation delay(3)		40	ns
t_{CSDOZ}	$\overline{CS}$ high to DOUT Hi-Z: propagation delay		20	ns
t_{CSH}	$\overline{CS}$ high pulse	50		ns
t_{SCCS}	Last SCLK falling edge to $\overline{CS}$ high	0		ns

(1) $\overline{CS}$ can be tied low.
(2) Holding SCLK low longer than 2^{18} f_{CLK} cycles resets the SPI interface.
(3) DOUT load = 20 pF || 100 kΩ to DGND.

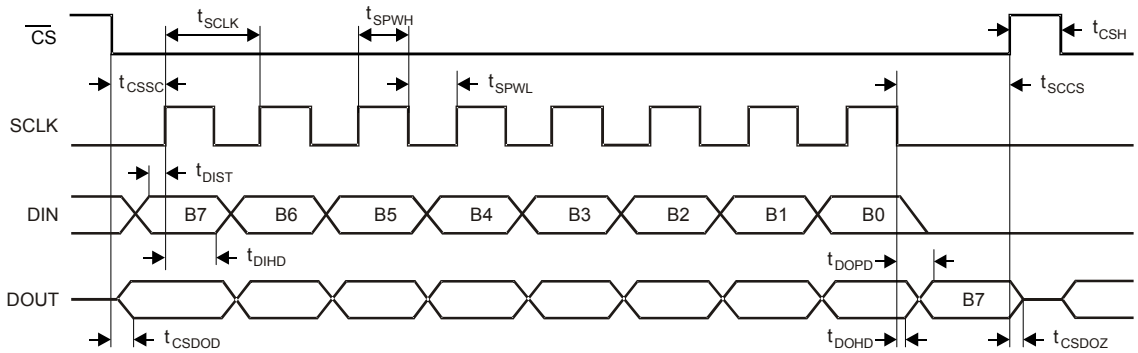

Figure 1. Serial Interface Timing

Copyright © 2011–2015, Texas Instruments Incorporated

7.6 Typical Characteristics

At T_A = +25°C, AVDD = +2.5 V, AVSS = –2.5 V, DVDD = 3.3 V, f_{CLK} = 4.096 MHz, and V_{REF} = 5 V, unless otherwise noted. DAC1282A supports gains = 1/1, 1/4, and 1/16 only.

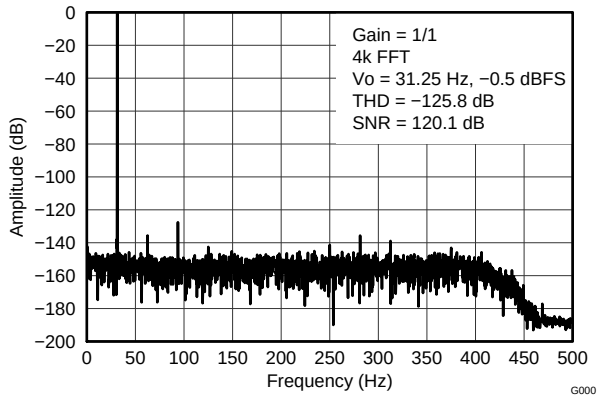

Figure 2. Output Spectrum Gain = 1/1

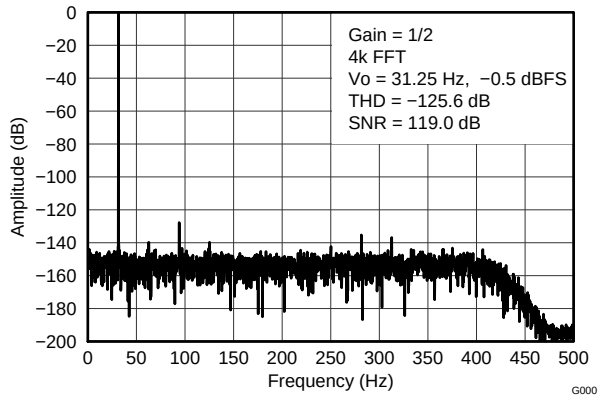

Figure 3. Output Spectrum Gain = 1/2

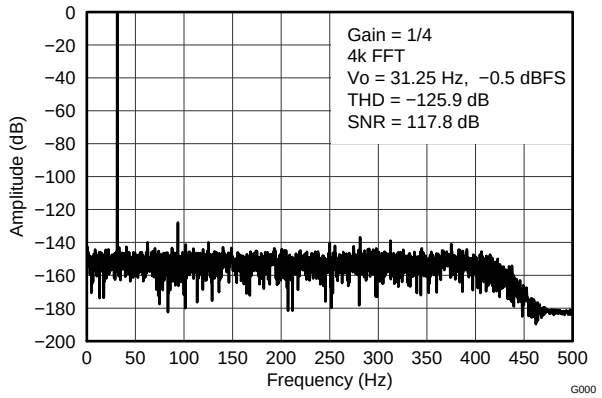

Figure 4. Output Spectrum Gain = 1/4

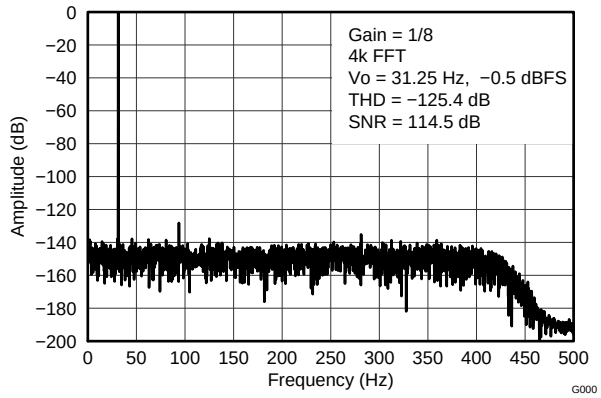

Figure 5. Output Spectrum Gain = 1/8

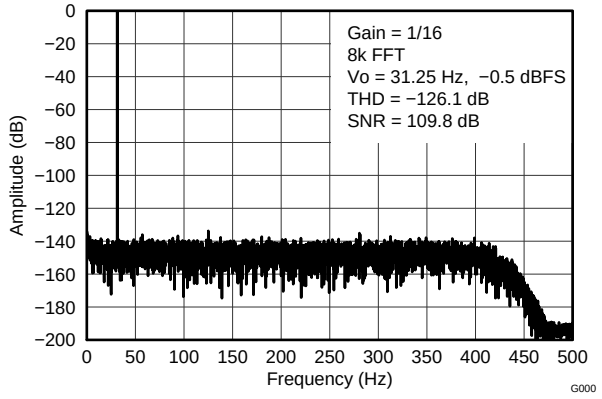

Figure 6. Output Spectrum Gain = 1/16

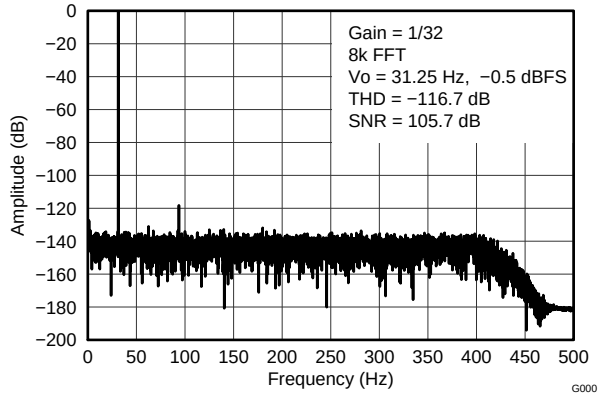

Figure 7. Output Spectrum Gain = 1/32

Copyright © 2011–2015, Texas Instruments Incorporated

Typical Characteristics (continued)

At T_A = +25°C, AVDD = +2.5 V, AVSS = –2.5 V, DVDD = 3.3 V, f_{CLK} = 4.096 MHz, and V_{REF} = 5 V, unless otherwise noted. DAC1282A supports gains = 1/1, 1/4, and 1/16 only.

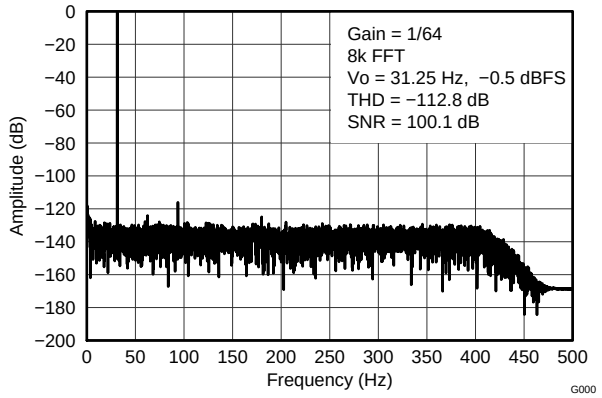

Figure 8. Output Spectrum Gain = 1/64

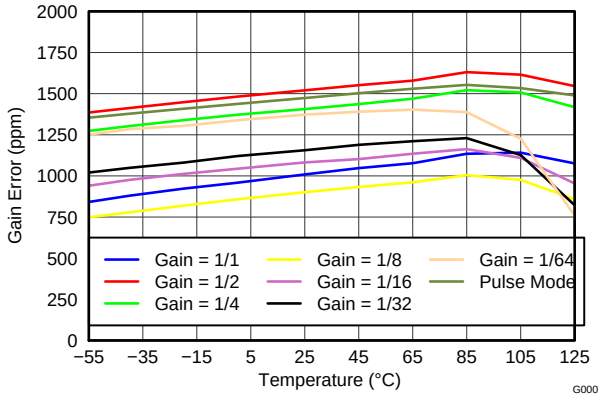

Figure 9. Gain Error vs Temperature

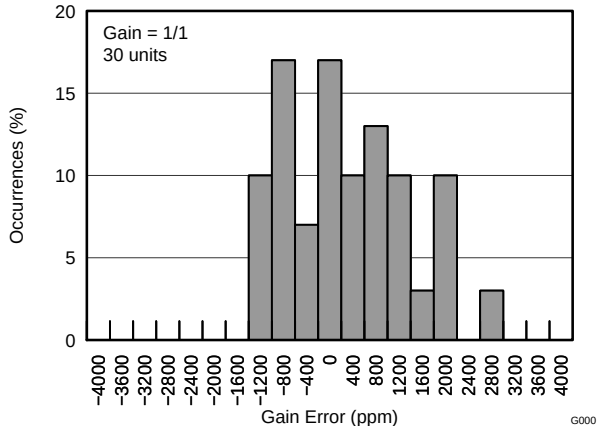

Figure 10. Gain Error Histogram

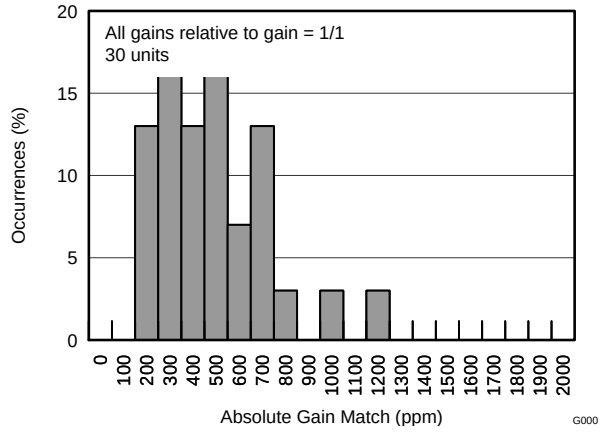

Figure 11. Gain Match Histogram

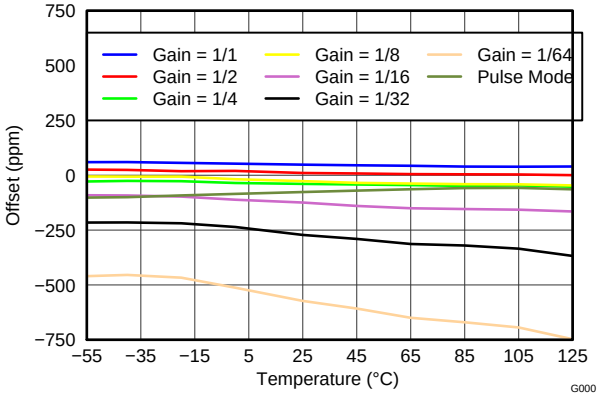

Figure 12. Offset vs Temperature

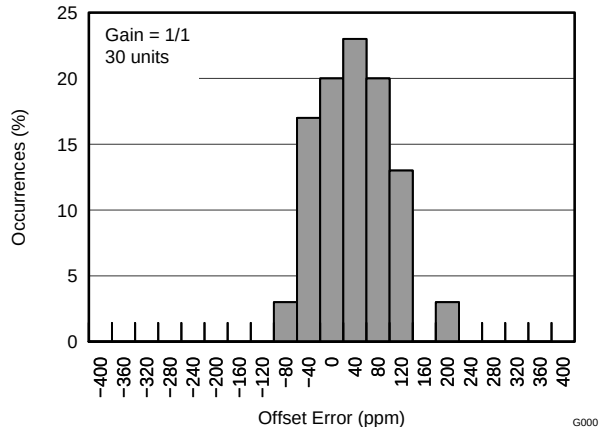

Figure 13. Offset Histogram

Copyright © 2011–2015, Texas Instruments Incorporated

Typical Characteristics (continued)

At T_A = +25°C, AVDD = +2.5 V, AVSS = –2.5 V, DVDD = 3.3 V, f_{CLK} = 4.096 MHz, and V_{REF} = 5 V, unless otherwise noted. DAC1282A supports gains = 1/1, 1/4, and 1/16 only.

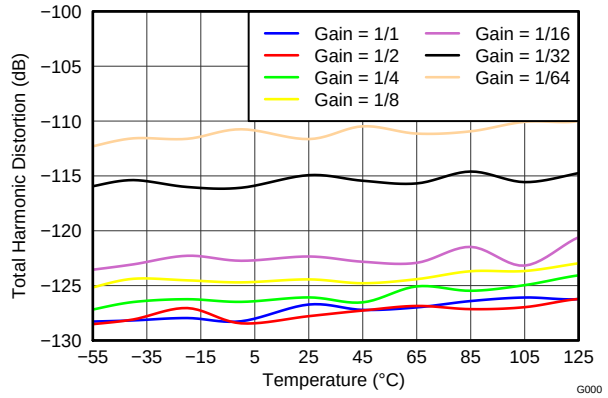

Figure 14. THD vs Temperature

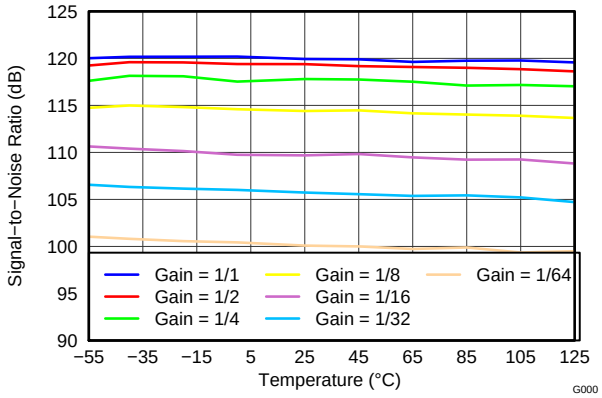

Figure 15. SNR vs Temperature

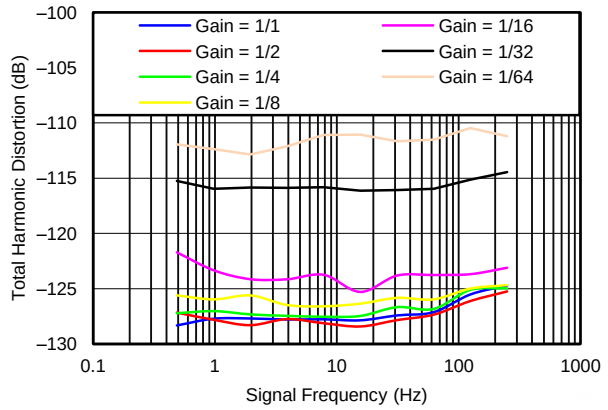

Figure 16. THD vs Signal Frequency

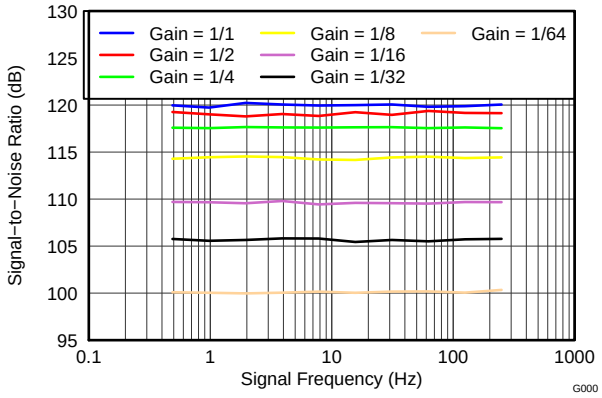

Figure 17. SNR vs Signal Frequency

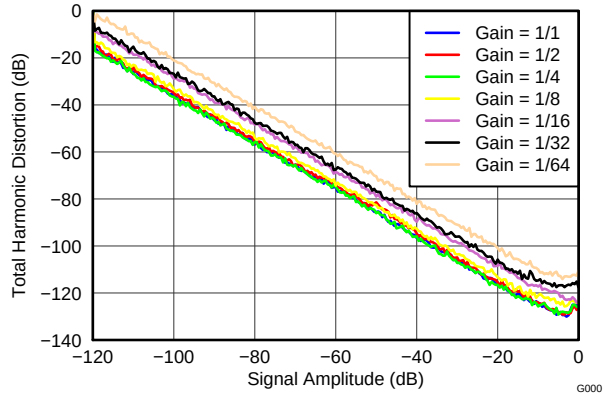

Figure 18. THD vs Signal Amplitude

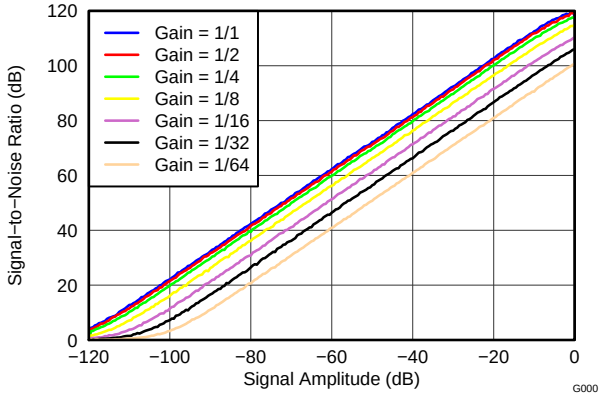

Figure 19. SNR vs Signal Amplitude

Copyright © 2011–2015, Texas Instruments Incorporated

Typical Characteristics (continued)

At T_A = +25°C, AVDD = +2.5 V, AVSS = –2.5 V, DVDD = 3.3 V, f_{CLK} = 4.096 MHz, and V_{REF} = 5 V, unless otherwise noted. DAC1282A supports gains = 1/1, 1/4, and 1/16 only.

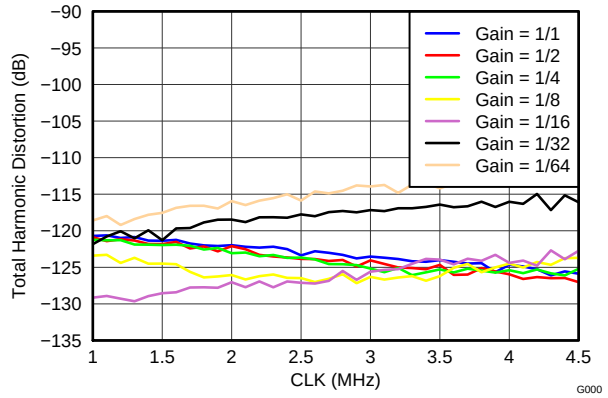

Figure 20. THD vs Master Clock Frequency

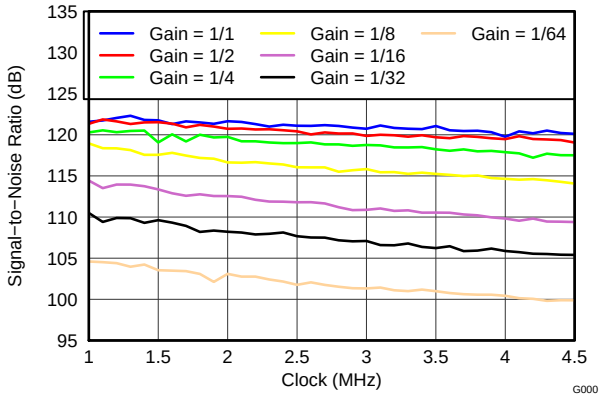

Figure 21. SNR vs Master Clock Frequency

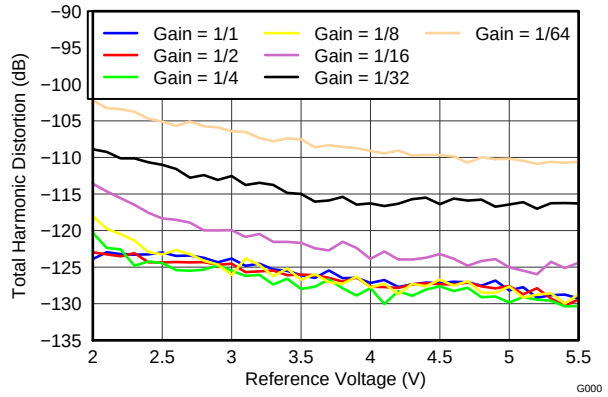

Figure 22. THD vs Reference Voltage

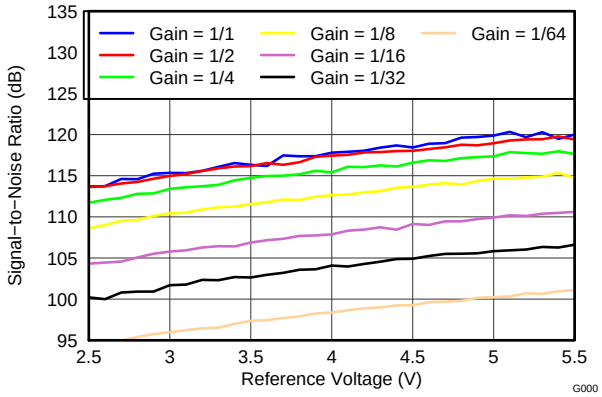

Figure 23. SNR vs Reference Voltage

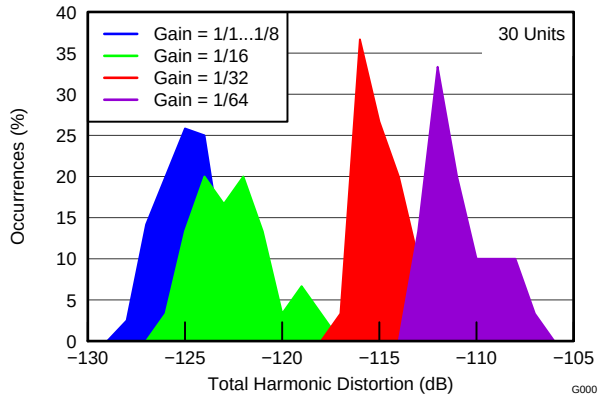

Figure 24. THD Histogram

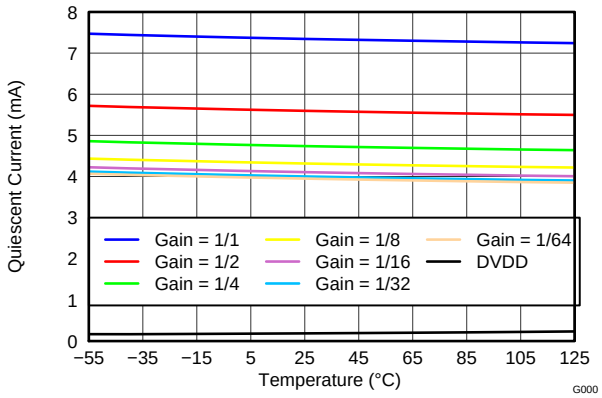

Figure 25. Power-Supply Current vs Temperature

Copyright © 2011–2015, Texas Instruments Incorporated

Typical Characteristics (continued)

At T_A = +25°C, AVDD = +2.5 V, AVSS = –2.5 V, DVDD = 3.3 V, f_{CLK} = 4.096 MHz, and V_{REF} = 5 V, unless otherwise noted. DAC1282A supports gains = 1/1, 1/4, and 1/16 only.

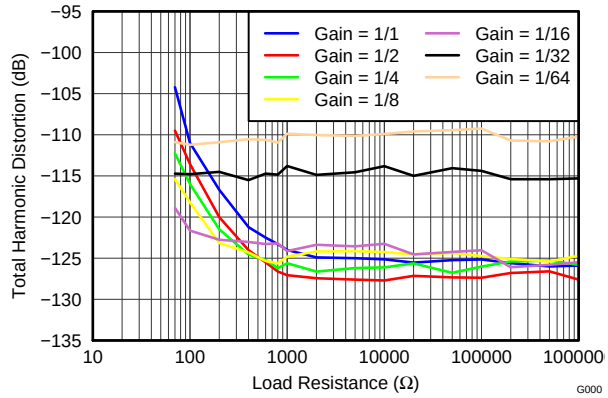

Figure 26. THD vs Resistive Load

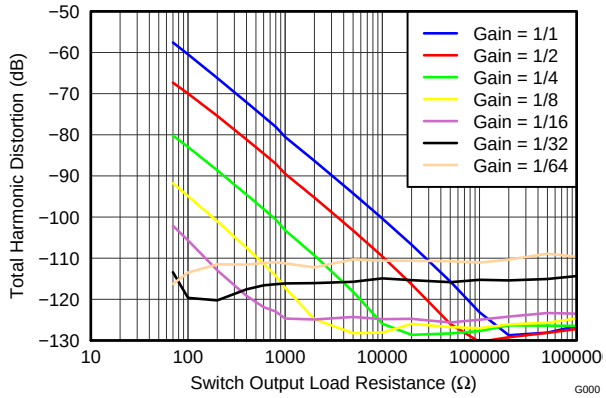

Figure 27. Switch THD vs Resistive Load

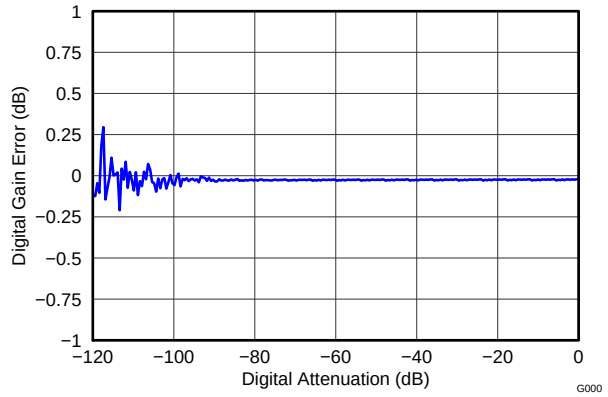

Figure 28. Digital Gain Linearity

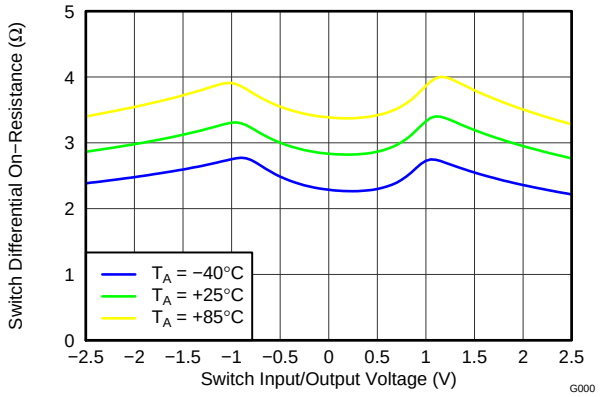

Figure 29. Switch On-Resistance vs Signal Voltage

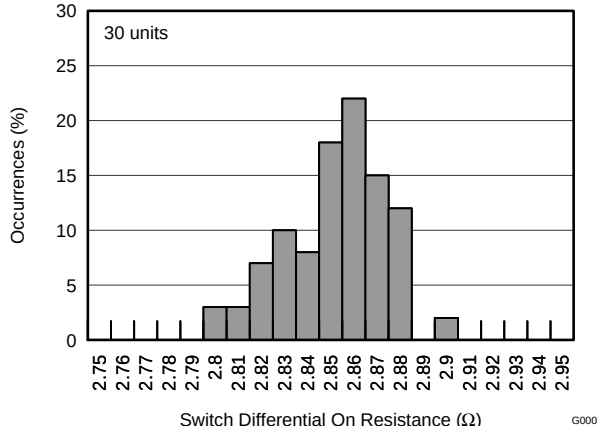

Figure 30. Switch On-Resistance Histogram

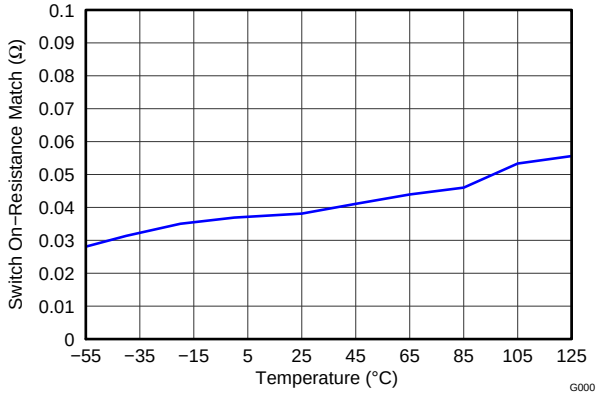

Figure 31. Switch On-Resistance Match vs Temperature

Copyright © 2011–2015, Texas Instruments Incorporated

8 Detailed Description

8.1 Overview

The DAC1282 is a single-chip, digital-to-analog converter (DAC) that self-generates low-distortion sine-wave and pulse-output signals for the demanding testing requirements of seismic recording equipment. Figure 32 shows the block diagram of the DAC1282.

The DAC1282A device is functionally equivalent to the DAC1282, except that the DAC1282A supports PGA gains of 1/1, 1/4, and 1/16 only. The DAC1282A also relaxes the THD specification of these gains. See the *Electrical Characteristics* section for more details.

The DAC1282 requires two supply voltages: analog and digital. The analog supply can be single 5 V or bipolar ±2.5 V. The digital supply range is 1.65 V to 3.6V. The output signal common-mode voltage is regulated to 100 mV below the midpoint of the analog power-supply voltage. An internal power-on reset (POR) circuit resets the DAC on power-up.

An SPI™-compatible serial interface is used to access the DAC1282 registers for device configuration and control. The configuration registers can be read back by clocking the data out on the DOUT pin. The DAC1282 voltage output is fully differential and is taken out on the VOUTP/VOUTN pins. The CAPP/CAPN pins connect to external filter capacitors to reduce the output noise.

The reference input voltage sets the DAC1282 full-scale output. The DAC reference voltage is applied between the VREF and AVSS pins. The DAC is optimized to operate with a 5-V reference. The sine-wave generator is programmable by registers to set the sine frequency and amplitude. The frequency range is programmable from 0.4883 Hz to 250 Hz. The output level is controlled by both analog gain (in 6-dB steps), and digital gain (in 0.5-dB steps).

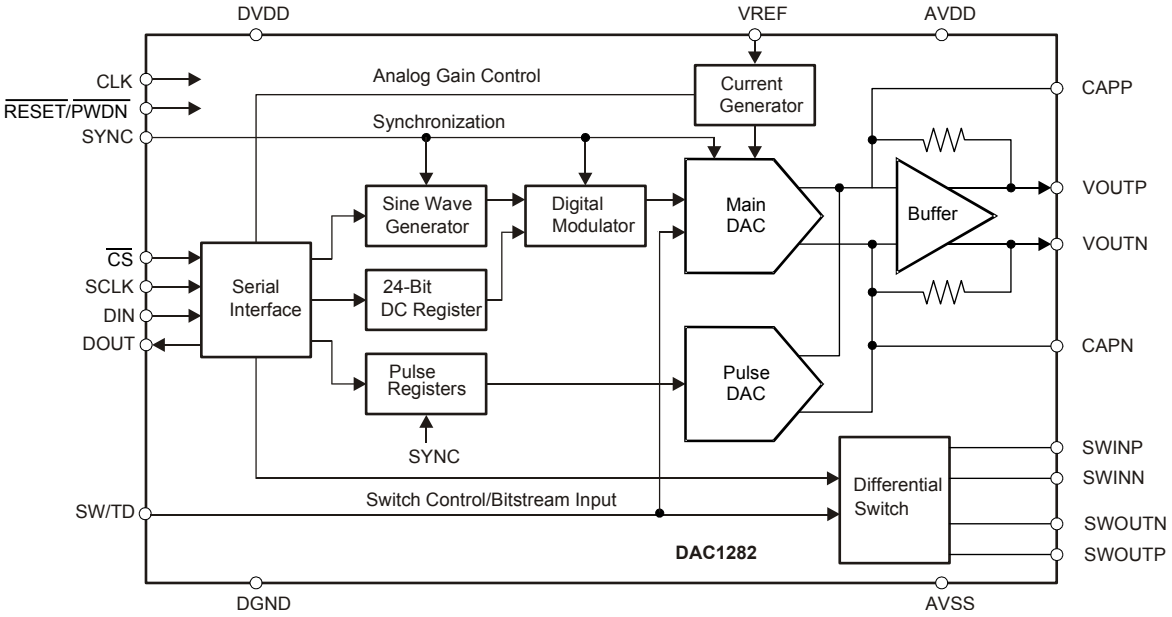

Figure 32. DAC1282 Block Diagram

The digital modulator takes the output from the sine-wave generator or the 24-bit dc register to generate the ones-density bitstream. The bitstream drives the main DAC. Optionally, ones-density data can be input to drive the DAC directly, bypasses the digital signal generator. The main DAC develops a differential output current that is converted to a differential output voltage by an internal current-to-voltage (I/V) amplifier. The output range is set by analog gain that scales the DAC current generator. The output amplifier provides current limit protection.

The dc mode is programmed by a 24-bit register and is used to provide a dc output. The dc mode also has programmable ranges controlled by the analog gain control.

Copyright © 2011–2015, Texas Instruments Incorporated

Overview (continued)

In Pulse mode, a fast-response, 5-bit pulse DAC is used to provide 31 preset dc levels. The levels span over the available output ranges. The pulse DAC is optimized to provide fast response with short output rise times. The pulse DAC is triggered by the SYNC pin for precision control of the pulse time.

The DAC1282 includes a low distortion differential output switch. The output switch can connect the DAC1282 output to sensors for THD and impulse testing. The switch is controlled by either pin or command, thus allowing precise switch timing.

The SYNC input synchronizes the output signal to a known time reference. In sine mode, SYNC resets the sine wave to the zero crossing. In Pulse mode, SYNC selects one of two user-programmed dc levels.

The $\overline{\text{RESET}}$/$\overline{\text{PWDN}}$ pin powers down the device when low. When $\overline{\text{RESET}}$/$\overline{\text{PWDN}}$ is released high, the DAC1282 is reset.

The SW/TD input is dual function. In digital data mode, the pin is the ones-density data input. In the other modes, SW/TD controls the opening/closing of the switch.

Figure 33 shows the main details of the main DAC. The main DAC provides the digital-to-analog conversion by filtering the ones-density digital data. In operation, the current generator establishes the range current that is mirrored to a multi-tap, current-steering filter stage. The current generator is controlled by the analog gain control register that scales the weight of the tap currents to one of seven ranges (0 dB to –36 dB).

The current-steering stage switches the tap currents to the positive or negative current summing nodes, as the digital input is sampled. A higher ones-density directs an increasing average current to one node than the other, thus increasing the differential current. The differential current is converted to differential voltage by the internal I/V converter stage. The common-mode current sources balance the current at the amplifier summing node.

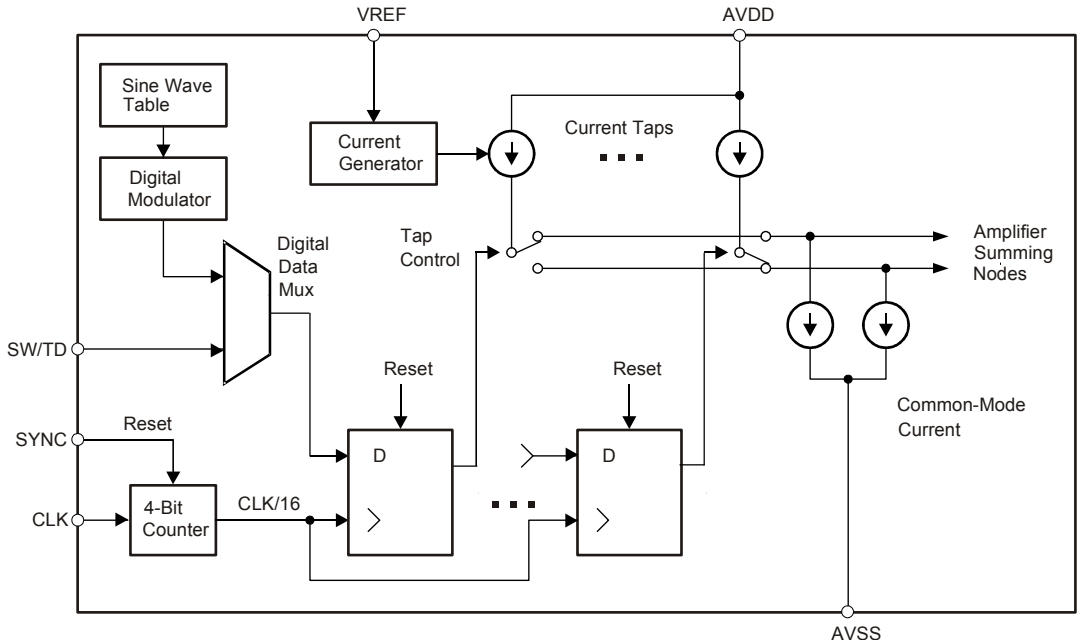

Figure 33. Main DAC Block Diagram

8.2 Feature Description

8.2.1 Signal Output (VOUTP, VOUTN)

As shown in Figure 34, the DAC provides a differential voltage (V_{DIFF} = VOUTP – VOUTN) on pins VOUTP and VOUTN. The output common-mode voltage (V_{COM}) is regulated to 100 mV below the midpoint of the analog supply (AVDD – AVSS).

Each signal output swings above and below the common-mode voltage. Best performance is realized when the DAC output is used differentially. In power-down mode, the outputs enter a high-impedance, 3-state mode.

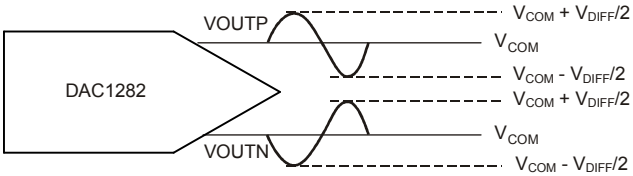

NOTE: V_{DIFF} = VOUTP – VOUTN = ±2.5 V × Gain (V_{REF} = 5 V).
V_{COM} = –0.1 V (±2.5-V supplies) or 2.4 V (5-V supply).

Figure 34. DAC Output Signal

The DAC output buffer is rated to drive up to a 2-nF capacitive load (maximum) and a 100-Ω resistive load (minimum). However, degradation of THD performance results in resistive loads less than 1 kΩ, as shown in Figure 26

The internal digital modulator generates the signal to drive the DAC. The modulator shapes the in-band noise to high frequency and the frequency-shaped noise is present on the DAC output. However, the high frequency DAC output noise is rejected by the digital filter of the ADC and does not affect system performance.

The DAC sampling update noise is also present on the signal output. The sampling noise does not affect the ADC performance, but when testing the ADC near full-scale input, the noise can cause false indication of the ADC modulator overrange detection. The ADS1282 overrange output signal indication should be ignored when testing at or below the ADC full-scale input.

Copyright © 2011–2015, Texas Instruments Incorporated

Feature Description (continued)

8.2.2 DAC Modes

The DAC1282 has four operational modes of: sine, dc, pulse, and external digital data input. These modes are programmed by the MODE[1:0] bits in the GANMOD register, as shown in Table 1.

Table 1. DAC Modes

MODE[1:0] BITS	DAC MODE
00	Sine
01	DC
10	Digital data
11	Pulse

8.2.2.1 Sine Mode

In sine mode, the DAC1282 provides a sine-wave output. An internal signal generator develops the sine-wave signal. The M[3:0], N[7:0], and FREQ register bits program the output frequency. The frequency range is programmable from 0.4883 Hz to 250 Hz, as shown in Equation 1.

$$\text{Output Frequency (Hz)}^{(1)} = \frac{250}{2^{FREQ}} \times \frac{M[3:0] + 1}{N[7:0] + 1}$$

where:

$M[3:0] \leq N[7:0]$

(1) f_{CLK} = 4.096 MHz. The signal frequency scales with f_{CLK}. (1)

Table 2 lists values of registers M and N for selected output frequencies.

Table 2. Register Output Frequencies

SIGNAL FREQUENCY (Hz)(1)	M[3:0] REGISTER BITS	N[7:0] REGISTER BITS	FREQ BIT
0.48828125	0000	1111 1111	1
0.9765625	0000	1111 1111	0
1.953125	0000	0111 1111	0
3.90625	0000	0011 1111	0
7.8125	0000	0001 1111	0
15.625	0000	0000 1111	0
31.25	0000	0000 0111	0
50	0000	0000 0100	0
55	1010	0011 0001	0
60	0101	0001 1000	0
62.5	0000	0000 0011	0
100	1001	0001 1000	0
125	0000	0000 0001	0
250	0000	0000 0000	0

(1) f_{CLK} = 4.096MHz. The signal frequency scales with f_{CLK}.

Copyright © 2011–2015, Texas Instruments Incorporated

When the M or N registers are updated, the sine wave resets to the zero-crossing point. The sine wave can also be reset to the zero-crossing point by taking the SYNC pin high; see the *SYNC* section.

The amplitude of the sine-wave output is determined by analog and digital gains. The analog gain increments are 6 dB, from 0 dB to –36 dB, and are programmed by the GAIN[2:0] register bits. Table 3 lists the analog gains.

Table 3. Analog Gain

ANALOG GAIN (V/V)(1)	ANALOG GAIN (dB)(2)	DIFFERENTIAL RANGE (V)(3)	GAIN[2:0] REGISTER BITS
1/1	0	±2.5	000
1/2	–6	±1.25	001
1/4	–12	±0.625	010
1/8	–18	±0.312	011
1/16	–24	±0.156	100
1/32	–30	±0.078	101
1/64	–36	±0.039	110

(1) The DAC1282A supports analog gains of 1/1, 1/4, and 1/16 only.
(2) Relative to 1.77 V_{RMS} full-scale.
(3) V_{REF} = 5 V, digital gain = 0 dB.

The digital gain resolution is in 0.5-dB increments, from 0 dB to full mute and is programmed by the SINEG[7:0] register bits. Table 4 lists the digital gain setting. Equation 2 is the amplitude setting in sine mode.

$$\text{Sine Amplitude (dB)} = \text{Analog Gain (dB)} + \text{Digital Gain (dB)} \quad (2)$$

Best SNR, for a given signal level, is achieved by reducing the analog gain while maximizing the digital gain.

Table 4. Sine Mode Digital Gain

SINE MODE DIGITAL GAIN (dB)	SINEG[7:0] REGISTER BITS
0	0000 0000
–0.5	0000 0001
–1.0	0000 0010
—	—
–119.5	1110 1111
Full mute	1111 0000
Full mute	1111 xxxx
Full mute	1111 1111

Copyright © 2011–2015, Texas Instruments Incorporated

8.2.2.2 DC Mode

The DAC1282 provides a dc output mode with 24-bit available resolution. The output level is determined by the analog gain and the 24-bit dc registers.

The GAIN[2:0] register bits set the analog gain (see Table 3). The DCG[23:0] register bits set the 24-bit level over the selected analog range. Table 5 lists the digital gain settings in dc mode.

Table 5. DC Mode Digital Gain Settings

DIFFERENTIAL OUTPUT VOLTAGE (V)(1)	DCG[23:0] REGISTER BITS
+2.5 x Gain	7FFFFFh
+1.25 x Gain	3FFFFFh
0	0
–1.25 x Gain	C00000h
–2.5 x Gain	800001h

(1) V_{REF} = 5 V. Ideal output voltage excluding gain, offset, linearity and noise errors..

8.2.2.3 Pulse Mode

In pulse mode, a fast responding, 5-bit pulse DAC is used to generate the output. The pulse DAC is designed to approximate a linear-in-dB output function, allowing the generation of pulse test signals across all ranges. Two registers are used to preset the DAC output. The SYNC pin is used to select one of the two registers. When SYNC is low, the PULSA register value drives the DAC; when SYNC is high, the PULSB register value drives the DAC. The pulse registers can be programmed to yield differential outputs from –2.5 V to +2.5 V. Note that the pulse levels scale with V_{REF} and are independent of the analog gain settings. Table 6 lists the programmable range of the pulse A and pulse B registers.

Table 6. Pulse Register Values

OUTPUT (V)(1)	PULSA[4:0], PULSB[4:0]	OUTPUT (V)(1)	PULSA[4:0], PULSB[4:0]
+2.50	01111	–0.020	11111
+1.88	01110	–0.029	11110
+1.25	01101	–0.039	11101
+0.938	01100	–0.058	11100
+0.625	01011	–0.078	11011
+0.469	01010	–0.117	11010
+0.312	01001	–0.156	11001
+0.234	01000	–0.234	11000
+0.156	00111	–0.312	10111
+0.117	00110	–0.469	10110
+0.078	00101	–0.625	10101
+0.058	00100	–0.938	10100
+0.039	00011	–1.25	10011
+0.029	00010	–1.88	10010
+0.020	00001	–2.50	10001
0	00000		

(1) V_{REF} = 5 V. Ideal pulse mode differential output, values are rounded and exclude noise, offset, gain, and linearity errors.

Note that when pulse testing the ADC, the ADC digital filter time domain response has characteristic overshoot and ringing. As a result of the ADC filter overshoot, input levels close to ADC full scale may cause clipping of the ADC output code.

Copyright © 2011–2015, Texas Instruments Incorporated

8.2.2.4 Digital Data Mode

In digital data mode, the DAC internal signal generator is bypassed and the DAC is driven instead by applying a bitstream input. Arbitrary DAC output waveforms can be generated by application of custom digital data patterns. The data format in this mode is ones-density modulated input at CLK/16 data rate (256 kHz). The input is applied to the SW/TD input pin. The DAC1282 output in digital data mode is defined in Equation 3.

Digital Data Mode Differential Output = VOUTP – VOUTN = $V_{REF}/2 \times \text{Gain} \times (\text{TD} - 50\%)/25\%$

where:

V_{REF} is 5-V nominal,
Gain is the analog gain (1/1 to 1/64),
TD is the bitstream ones-density from 25% to 75%. (3)

The DAC1282 filters the digital data (bitstream) input providing a voltage output proportional to the bitstream ones-density. The GAIN[2:0] register sets the analog gain in 6-dB steps, from 0 dB to –36 dB (1/1 to 1/64); see the *SYNC* section for the external timing requirements. Table 7 lists several values of the external bitstream input.

Table 7. External Bitstream Input

ONES-DENSITY BITSTREAM (%)	VOUTP – VOUTN (V)[(1)]
25	–2.5 × Gain
37.5	–1.25 × Gain
50	0
62.5	+1.25 × Gain
75	+2.5 × Gain

(1) V_{REF} = 5 V. Gain is the analog gain, programmable from 1/1 to 1/64 (0 dB to –36 dB).

Copyright © 2011–2015, Texas Instruments Incorporated

8.2.3 Reference Voltage (V_{REF})

The DAC1282 requires an external reference for operation. Although reference voltage as low as 2.5 V can be used, best SNR is achieved with a 5-V reference. The reference input is defined as the voltage difference between VREF and AVSS (that is, V_{REF} = VREF – AVSS). The DAC1282 output scales with V_{REF}; consequently, reference noise or drift appears on the DAC output. Excessive reference noise may lead to degraded SNR. A low-drift and low-noise reference is recommended.

Connect the external reference ground pin directly to the AVSS pins using a star connector to AVSS pin 14. Star connection minimizes the possibility of power-supply crosstalk. Also, connect a 0.1-µF capacitor close to the VREF and AVSS terminals to reduce noise susceptibility. Figure 35 shows the reference connection. The reference input impedance is 220 kΩ. In power-down the switch is off, resulting in very high input impedance. For single-supply applications, connect AVSS to a clean analog ground point.

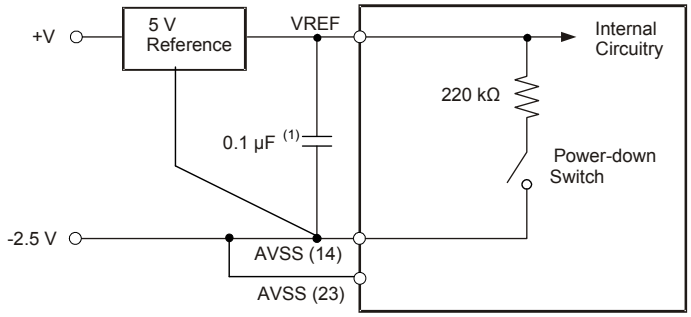

(1) Recommended bypass capacitor.

Figure 35. Reference Input Connection

8.2.4 Output Filter (CAPP, CAPN)

The CAPP and CAPN pins are the connections for two external capacitors, one capacitor connects to CAPP and VOUTP and the other capacitor connects to CAPN and VOUTN. The capacitors are required to filter the DAC sampling noise. The capacitor values are 1 nF; capacitors with low voltage coefficients should be used (C0G ceramic or film).

As seen in Figure 36, the external capacitors form an analog low-pass filter with the internal feedback resistors. After step changes to the data in the sine, dc, and digital data modes, the settling of the DAC and the analog filter is 100-µs typical, as shown in Figure 46. In pulse mode, the filter is internally disabled, yielding shorter settling time.

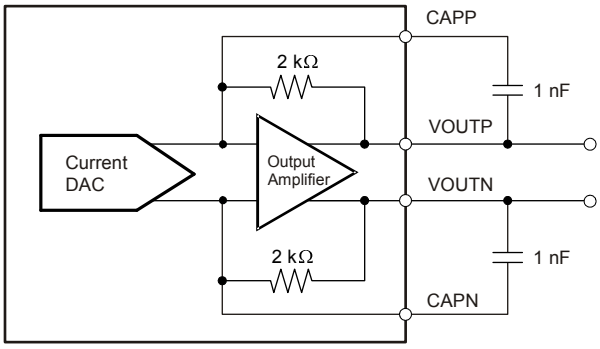

Figure 36. Output Filter

8.2.5 Output Switch (SWINP, SWINN, SWOUTP, SWOUTN)

The DAC1282 has an integrated output switch. The switch can be used to route the DAC output signal to a sensor for pulse, THD, and common-mode testing. The switch has low on-resistance and matched elements to minimize signal distortion. The switch input voltage range extends to the analog power supply.

The switch is controlled by three register bits, SW[2:0], and is also controlled by the SW/TD input pin. The switch integrates break-before-make operation when the register or the SW/TD input control is changed. The SW/TD input can be used to force the switch open for precise timing control of sensor impulse testing; see the *Switch Control/DAC Data Input (SW/TD)* section. Figure 37 and Table 8 describe the switch operation.

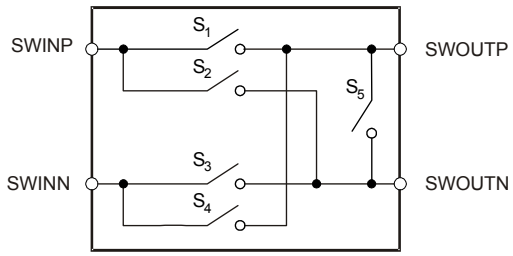

Figure 37. DAC1282 Signal Switch

Note that when the DAC is in power-down mode, the switch is forced open.

As shown in Figure 29, the switch on-resistance varies with the switch signal level. When the switch is used to route the signal and a resistive load is connected to the switch output, the switch on-resistance variations interact with the load resistance and cause the THD to degrade. Figure 27 illustrates the dependence of THD versus switch load resistance. The dependence of THD data was taken with a full-scale signal.

Table 8. Switch Connections

DESCRIPTION	PIN CONNECTIONS	SWITCHES CLOSED	SW[2:0] REGISTER BITS
Open (default)	Open	None	000
Differential	SWINP to SWOUTP and SWINN to SWOUTN	S1, S3	001
Differential reverse	SWINP to SWOUTN and SWINN to SWOUTP	S2, S4	010
Common-mode positive	SWINP to SWOUTP and SWOUTN	S1, S2	011
Common-mode negative	SWINN to SWOUTP and SWOUTN	S3, S4	100
Single-ended positive	SWINP to SWOUTP	S1	101
Single-ended negative	SWINN to SWOUTN	S3	110
Output short	SWOUTP to SWOUTN	S5	111

Copyright © 2011–2015, Texas Instruments Incorporated

8.2.6 Clock Input (CLK)

The CLK pin is the master clock input to the DAC1282, nominally 4.096 MHz. As with any high-performance data converter, a high-quality clock source is essential. A crystal oscillator or low-jitter PLL clock source is recommended. Make sure to avoid ringing on the input by keeping the trace short and source-terminating (typically 50 Ω). See the CLK specifications shown in Figure 38 and Table 9.

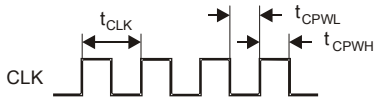

Figure 38. CLK Timing Requirements

Table 9. Requirements for Figure 38

SYMBOL	DESCRIPTION	MIN	MAX	UNIT
t_{CLK}	CLK period	235	1000	ns
$t_{CPWH, L}$	CLK pulse width high or low	95	900	ns

8.2.7 Switch Control/External Digital Input (SW/TD)

SW/TD is a multi-function digital input pin. The SW/TD function depends on the mode of operation.

8.2.7.1 SW Function

In sine, dc, and pulse mode, SW/TD controls the output switch. When SW/TD is low, all switches are forced open, overriding the switch register setting (SW[2:0]). When SW/TD is high, the switch is transparent to the value of register setting. In power-down mode, the switch is forced open.

8.2.7.2 TD Function

In digital input mode, SW/TD is the signal input used to drive the DAC. The data input are modulated by ones-density and are clocked in by the master clock (CLK). When the ones-density is 75% (that is, on average, three out of four bits are '1'), the differential output voltage is at the positive maximum value. When the ones-density is 25% (that is, on average, three out of four bits are '0'), the differential output voltage is at the negative maximum value. When the ones-density is 50% (on average, an equal number of '0's and '1's), the differential output is zero.

SW/TD is sampled by the DAC1282 at the rate of CLK/16. Therefore, the sampling can have ±8 CLK periods of uncertainty. SYNC can be used to eliminate the uncertainty by synchronizing the phase of SW/TD to the desired CLK cycle. Synchronizing the digital input results in a consistent phase of the output signal; see the *SYNC* section.

The output range is set by the analog gain bits, GAIN[2:0]; see Table 3. Equation 3 describes the DAC output versus the bitstream input ones-density. Make sure to avoid ringing on the input by keeping the trace short. In some cases, source-terminating resistors may be necessary (20 Ω to 50 Ω).

Copyright © 2011–2015, Texas Instruments Incorporated

8.2.8 SYNC

SYNC is a digital input used to synchronize the DAC1282 output.

In the digital data mode, the DAC input is a ones-density bitstream. In this mode, the SYNC pin synchronizes the sampling of SW/TD digital data to the desired master clock cycle (CLK). When SYNC is low or high, the DAC operates normally. When SYNC is taken from low to high, the DAC output is reset to zero and the sample instant of SW/TD is reset to the eighth rising CLK edge that follows. The SW/TD is then regularly sampled on subsequent 16 CLK intervals. After synchronization, the DAC output is not settled and achieves full settling 400 CLK periods later, as shown in Figure 39.

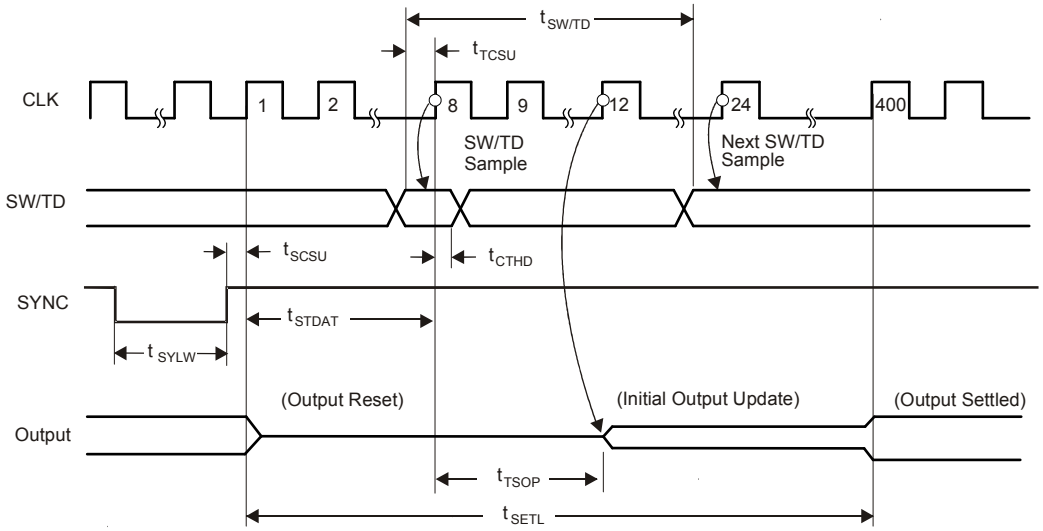

Figure 39. Digital Data Mode Synchronization

Table 10. Timing Characteristics for Figure 39(1)

SYMBOL	DESCRIPTION	MIN	TYP	UNIT
t_{SCSU}	SYNC high to CLK high setup time	30		ns
t_{TCSU}	SW/TD to CLK high setup time	30		ns
t_{CTHD}	CLK high to SW/TD hold time	10		ns
t_{SYLW}	SYNC low pulse width	2		t_{CLK}
t_{STDAT}	CLK high after SYNC high to SW/TD sample time		8	t_{CLK}
t_{TSOP}	SW/TD sample to output update		4	t_{CLK}
$t_{SW/TD}$	SW/TD period		16	t_{CLK}
t_{SETL}	SYNC high to fully-settled output		400	t_{CLK}

(1) DVDD = 1.65 V to 3.6 V.

Copyright © 2011–2015, Texas Instruments Incorporated

In sine mode, the SYNC rising edge resets the DAC output to differential 0 V (sine-wave zero-crossing point). When SYNC is high or low, the output is unaffected. When SYNC is taken from low to high, the output resets on the following CLK rising edge. SYNC must be pulsed low for a minimum of 2 CLK cycles. The SYNC input can be applied simultaneous to the DAC and the ADS1282 (ADC in pulse-sync mode).

To synchronize the DAC, observe SYNC to the CLK timing requirements shown in Figure 40. That is, the SYNC rising edge should be applied before the set-up time or after the hold time specifications. If the SYNC timing requirement is not met, the DAC may synchronize with one clock cycle timing error.

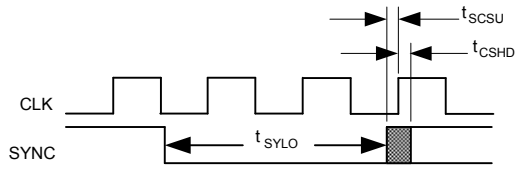

Figure 40. Sine Mode Synchronization

Table 11. Timing Characteristics for Figure 40 (1)

SYMBOL	DESCRIPTION	MIN	UNIT
t_{SYLO}	SYNC pulse width low	2	t_{CLK}
t_{SCSU}	SYNC rising edge to CLK rising edge setup time	30	ns
t_{CSHD}	CLK rising edge to SYNC rising edge hold time	40	ns

(1) DVDD = 1.65 V to 3.6 V.

In pulse mode, the SYNC pin selects one of two pre-programmed pulse levels. The pulse levels are programmable from +2.5 V to –2.5 V in approximately 3-dB steps by pulse level registers PULSA and PULSB. When SYNC is low, the value of the PULSA register drives the DAC; when SYNC is high, the value of the PULSB register is the code of the DAC, as shown in Figure 41. When the SYNC pin is changed, the DAC output updates immediately to the new code.

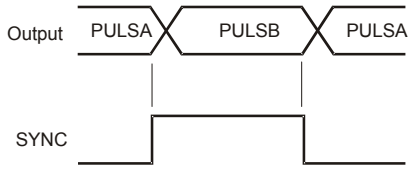

Figure 41. Sync Operation in Pulse Mode

Copyright © 2011–2015, Texas Instruments Incorporated

8.2.9 $\overline{\text{RESET}}$/$\overline{\text{PWDN}}$

The $\overline{\text{RESET}}$/$\overline{\text{PWDN}}$ is a digital input used to power-down and reset the DAC1282. To power-down the DAC, take the pin low. In power-down mode, the power consumption is reduced to a device leakage level (see the Electrical Characteristics table). The signal output and digital pin DOUT enters 3-state and the output switch is driven off. Note that the digital inputs must remain defined as either logic low or logic high; do not float the inputs. Disable the CLK input to minimize leakage. To exit the power-down state, take the pin high. The DAC1282 is reset after power-down mode is exited.

The DAC1282 is reset by taking the $\overline{\text{RESET}}$/$\overline{\text{PWDN}}$ pin low for a minimum of two f_{CLK} cycles and is then taken back high. The DAC1282 is held in reset for 2 f_{CLK} cycles; after this time, DAC communications may begin, as shown in Figure 42 and Table 12.

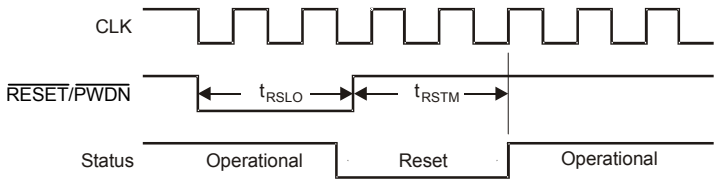

Figure 42. DAC $\overline{\text{RESET}}$/$\overline{\text{PWDN}}$

Table 12. Timing Characteristics for Figure 42

SYMBOL	DESCRIPTION	MIN	MAX	UNIT
t_{RSLO}	$\overline{\text{PWDN}}$/$\overline{\text{RESET}}$ pulse width low for power-down	500		ns
t_{RSTM}	$\overline{\text{PWDN}}$/$\overline{\text{RESET}}$ high to begin operation		500	ns

8.2.10 AVDD, AVSS, and DVDD Power Supplies

The DAC1282 has two power supplies: analog and digital. The analog supply (AVDD, AVSS) is 5 V and can either be single 5 V or dual (±2.5 V). The analog supply should be clean and free from noise and ripple. The DAC1282 regulates the output common-mode voltage to 0.1 V below the mid-point of the analog supply. Because the analog supply pins draw signal-dependent current and AVSS (pin 14) is internally shared with the reference input low, trace resistance between AVSS (pin 14) and the AVSS power supply should be minimized or degraded performance may result. Therefore, connect the external reference ground terminal close to the device AVSS terminal using a star connection. This configuration helps to minimize power-supply coupling to the reference input.

DVDD is the digital supply used to power both the internal digital and the device I/O pins. The allowable range of DVDD is 1.65 V to 3.6 V.

The power supplies can be sequenced on or off in any order, but the analog or digital inputs should never exceed AVDD or AVSS, or DVDD, respectively. In such an event, the internal ESD protection diodes may begin to conduct. The input current must always be limited as specified in the Absolute Maximum Ratings table.

Copyright © 2011–2015, Texas Instruments Incorporated

At power-on, when the latter of DVDD exceeds approximately 1.3 V, or the difference of AVDD – AVSS exceeds approximately 1.4 V, an internal power-on reset (POR) occurs. During POR, the device is held in a reset condition for a period of 2^{16} f_{CLK} periods as shown in Figure 43. During this time, the DAC1282 output is held at 0 V, differential. SPI communications are not possible during this time. After the reset time elapses, the default settings are loaded: 31.25 Hz, 28 mV_{RMS} amplitude, and output switch off. SPI communications can then be started.

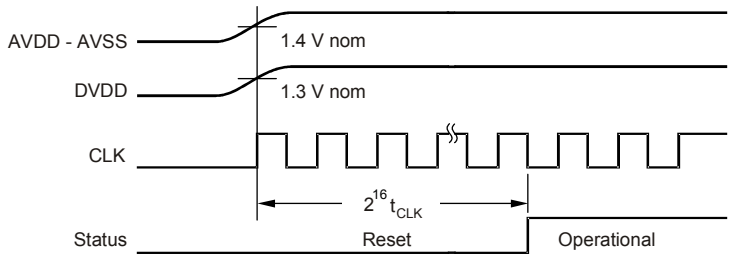

Figure 43. Power-On Sequence

8.2.10.1 Power Consumption

The power consumed by the DAC1282 depends on the analog gain. Table 13 shows the DAC power consumption.

Table 13. Power Consumption

ANALOG GAIN	POWER (mW)(1)
1/1	38
1/2	28
1/4	23
1/8	21
1/16	20
1/32	20
1/64	20

(1) Typical power consumption with V_{REF} = 5 V and V_{OUT} = 0 V. Excludes pulse mode.

8.2.10.2 Offset and Gain Error

The DAC1282 features a low offset error (±7/Gain + 50 ppm FS typical) and low gain error (0.1 % typical). Offset and gain drift are also very low for the DAC1282. Drift is calculated using the box calculation method of Equation 4:

Drift Calculation = (Max – Min) / Temperature Range (ppm/°C)

Where:

Max and Min are, respectively, the maximum and minimum offset and gain errors (in ppm) recorded over the specified temperature range of –40°C to +85°C. (4)

Gain match is the gain error of Gain = 1/1 relative to all analog gains.

8.2.10.3 Signal-to-Noise Ratio (SNR)

The DAC1282 achieves excellent signal-to-noise ratio (SNR) performance. The SNR data are obtained using the DAC circuit of Figure 50 and data captured by the ADS1282.

SNR is measured with a signal level of –0.5 dBFS and a 31.25-Hz test frequency, then taking the fast fourier transform (FFT) of 4096 data points from the ADS1282, using complementing gains. The noise power is calculated over the bandwidth of 413 Hz (1-ms sample period). The dc, fundamental, and harmonic bins are removed to calculate the SNR. The SNR measurement represents the combination of the ADS1282 SNR and the SNR of the DAC1282.

Copyright © 2011–2015, Texas Instruments Incorporated

8.2.10.4 DC Noise

DC noise data are obtained using the DAC circuit of Figure 50 with data captured by the ADS1282. The noise is measured in dc mode with the output voltage set to 0 V differential. The ADC gain is set to the complement of the DAC gain for each output range. The noise is the standard deviation of 4096-point ADC acquisition record (RMS noise, referred-to-output).

8.2.10.5 Total Harmonic Distortion (THD)

The DAC1282 achieves excellent THD performance. The THD data are obtained using the DAC circuit of Figure 50 and captured by the ADS1282. The ADC gain is set to the complement of the DAC gain for each output range.

THD is measured with a –0.5-dBFS output signal level and a 31.25-Hz test frequency, then taking the FFT of the 4096-point ADC acquisition record. The ADC data points are increased to 16,384 for gains of 1/16, 1/32, and 1/64 for improved rendition of harmonics as a result of the higher noise floor. The THD measurement represents the combination of the ADS1282 THD and the DAC1282 THD.

8.2.11 Step Response

The step response of the DAC depends on the mode. In pulse mode, the DAC disables the external analog filter formed by capacitors CAPP, CAPN. Disabling the analog filter in conjunction with the fast response pulse DAC results in noticeably faster rise time and shorter settling time. Note that additional filter components in the signal path may also affect the response time.

Figure 44 shows the pulse mode step response after the SYNC pin transition. Figure 45 shows the pulse mode detail settling to 0.1% of final value after the SYNC pin transition.

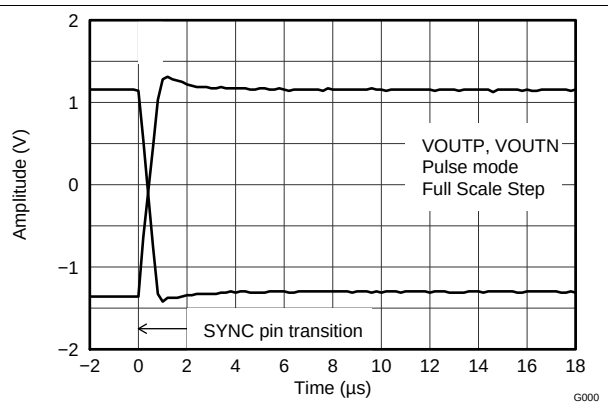

Figure 44. Pulse Mode Step Response

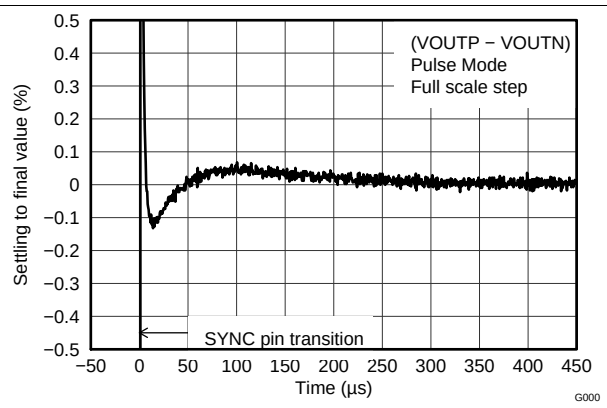

Figure 45. Pulse-Mode, Step-Response Detail

Copyright © 2011–2015, Texas Instruments Incorporated

Figure 46 shows the step response time of the dc mode. The step response of sine and digital data mode have similar settling times. Note that additional filter components in the signal path may also affect the response time.

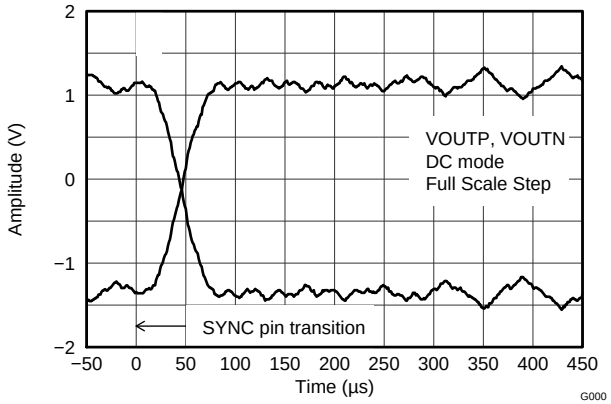

Figure 46. DC-Mode Step Response

8.2.12 Frequency Response

The DAC internal signal generator is capable of output signal frequencies from 0.489 Hz to 250 Hz. Frequencies outside of this range are also possible by driving the DAC directly with an external digital input (bitstream). However, the DAC low-pass filters the digital input and results in a sinx/x frequency response. The –3 dB signal bandwidth of the DAC filter is 8.2 kHz. Figure 47 illustrates the DAC1282 frequency response. Note that high-order noise-shaped digital inputs may limit the useable frequency range as a result of rising noise.

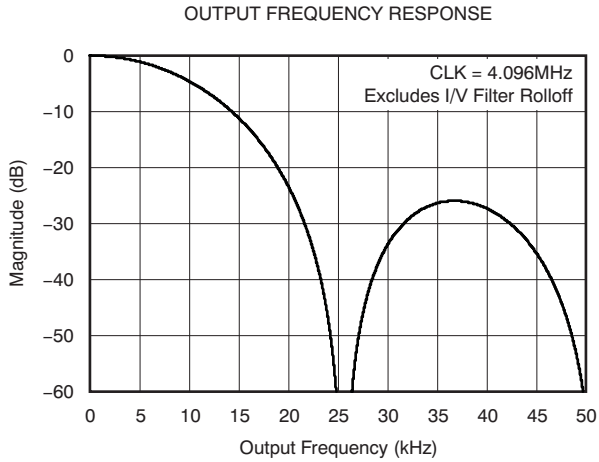

Figure 47. DAC Frequency Response

8.3 Device Functional Modes

8.3.1 Serial Interface

Configuration of the DAC is by an SPI-compatible serial interface consisting of four signals: $\overline{CS}$, SCLK, DIN, and DOUT; or the interface can consist of three signals in which case $\overline{CS}$ may be tied low. Tying $\overline{CS}$ low permanently selects the device and DOUT remains a driven output. The interface is used to read and write registers and also is used to send a DAC reset command.

8.3.1.1 Serial Communications

DAC1282 communication occurs by clocking register data into the device (on DIN) and reading back register data (on DOUT). The SCLK input is used to clock data into and out of the device. Data are input on the serial clock (SCLK) rising edge and output on the SCLK falling edge. The communication protocol is half-duplex (that is, data are transmitted to and from the device one direction at a time).

Communications to the device occur on 8-bit boundaries. If an unintentional SCLK transition should occur (such as is possible from a noise spike), the DAC1282 command decoder can be out-of-sync and the serial port may not respond properly. The serial port may reset in one of the following ways:

1. Take $\overline{CS}$ high to reset the interface
2. Hold SCLK inactive (low state) for 2^{18} f_{CLK} cycles to automatically reset the interface (see the *SPI Timeout* section)
3. Take $\overline{RESET}$/$\overline{PWDN}$ low then back high to reset the device and the interface
4. Cycle the power supplies for a power-on reset (POR)

8.3.1.2 Chip Select ($\overline{CS}$)

$\overline{CS}$ (chip select) selects the DAC1282 for communication. To select the device, pull $\overline{CS}$ low. $\overline{CS}$ must remain low for the duration of the command sequence. When $\overline{CS}$ is taken high, the serial interface is reset, input commands are ignored, and DOUT enters a high-impedance state.

8.3.1.3 Serial Clock (SCLK)

The serial clock (SCLK) is a Schmitt-triggered input used to clock data into and out of the DAC1282. SCLK can be idled high or low. If SCLK is idled low, the SPI timeout feature is active. If SCLK is idled high, the SPI timeout feature is disabled.

Despite the built-in Schmitt-trigger, keep SCLK as clean as possible to prevent glitches from accidently shifting the data. Series-terminated printed circuit board (PCB) traces often help to reduce ringing and overshoot (series termination resistance is approximately 20 Ω to 50 Ω). If SCLK is held low for 2^{18} f_{CLK} periods, the serial interface is reset. The timeout feature can be used to automatically recover the SPI port in the event of a noise glitch. Avoid starting new commands after this time interval to prevent an unexpected serial port reset at the next command instant.

8.3.1.4 Data Input (DIN)

DIN is the data input pin used to send data to the DAC. The DAC1282 latches DIN input data on the rising edge of SCLK.

8.3.1.5 Data Output (DOUT)

DOUT is the data output pin used to read register data out of the DAC. The data are shifted out on the falling edge of SCLK. DOUT enters a 3-state when $\overline{CS}$ is high.

8.3.2 SPI Timeout

The DAC has an SPI timeout feature that can be used to recover the SPI port if a possible noise pulse should occur. The noise pulse may lead to a false SCLK detection that can render the DAC serial port unresponsive. The port is recovered by taking $\overline{CS}$ high but, in applications where $\overline{CS}$ is tied low, holding SCLK low for 2^{18} CLK cycles resets the SPI port automatically. When SCLK is low, the SPI port resets on every 2^{18} CLK cycle interval. Holding SCLK high disables the automatic SPI reset.

Copyright © 2011–2015, Texas Instruments Incorporated

8.4 Programming

8.4.1 Commands

The commands summarized in Table 14 control and configure the DAC1282. The register read and register write commands are two-byte command arguments plus additional data bytes while the reset command is a one-byte command. The DAC1282 serial port chip select ($\overline{CS}$) can be taken high or held low between commands but must remain low for the entire command operation.

Table 14. Command Definitions

COMMAND	TYPE	DESCRIPTION	FIRST OPCODE BYTE	SECOND OPCODE BYTE
RREG	Register	Read nnnn register(s) at address rrrr (1)	0010 rrrr	0000 nnnn
WREG	Register	Write nnnn register(s) at address rrrr	0100 rrrr	0000 nnnn
RESET	Control	Reset the device	0000 011x (06 or 07h)	—

(1) rrrr = Starting read or write register address, nnnn= number of registers to read or write minus 1.

8.4.1.1 RREG: Read From Registers

Description: These two opcode bytes read register data. The register read operation is a two-byte opcode input followed by one or more bytes of register data as the output. The first byte of the command is the opcode and the register address combined. The second byte of the command specifies the number of registers to read (minus 1) in a block. Register data are output following the command input. Note that for multiple register read operations, the register address pointer does not wrap when the last register is exceeded.

First opcode byte: 0010 *rrrr*, where *rrrr* is the starting address register address to be read.

Second opcode byte: 0000 *nnnn*, where *nnnn* is the number of registers to read – 1.

Following bytes: Register data output in MSB-first format. The 16th SCLK falling edge of the opcode clocks out the MSB of the register data.

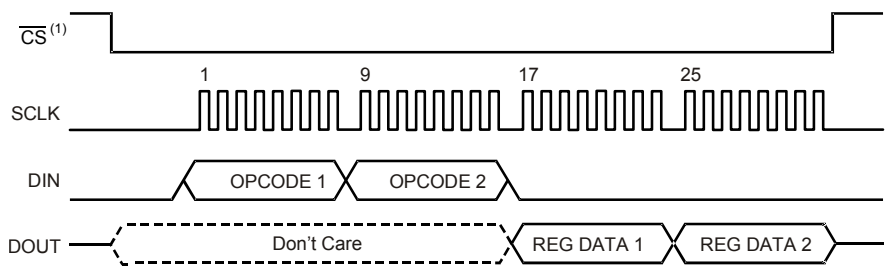

(1) $\overline{CS}$ may be tied low.

Figure 48. RREG Command Example: Read Two Registers Starting from Register 00h (Opcode 1 = 0010 0000, Opcode 2 = 0000 0001)

8.4.1.2 WREG: Write To Registers

Description: These two opcode bytes write register data. The register write operation is a two-byte opcode followed by one or more bytes of register data. The first byte of the command is the write opcode and the register address combined. The second byte of the command specifies the number of registers to write (minus 1) in a single sequence. The following bytes are the register data bytes. Note that for multiple register write operations, the register address pointer does not wrap when the last register is exceeded.

First opcode byte: 0010 *rrrr*, where *rrrr* is the starting address register address to be written.

Second opcode byte: 0000 *nnnn*, where *nnnn* is the number of registers to write – 1.

Following bytes: Register data input in MSB-first format.

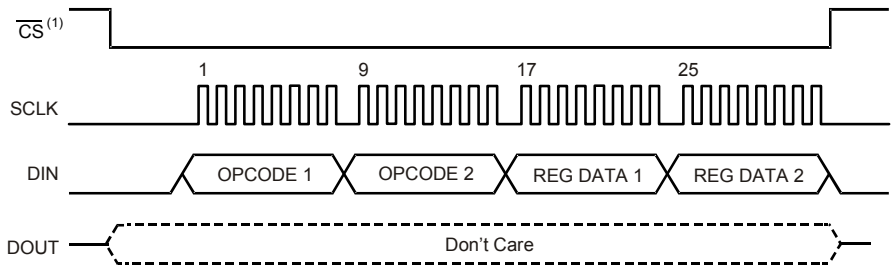

(1) $\overline{CS}$ may be tied low.

Figure 49. WREG Command Example: Write Two Registers Starting from Register 00h (Opcode 1 = 0100 0000, Opcode 2 = 0000 0001)

8.4.1.3 RESET: Device Reset

Description: This command resets the DAC. The registers are set to power-on default the value; see the *RESET/PWDN* section.

Copyright © 2011–2015, Texas Instruments Incorporated

8.5 Register Map

DAC1282 operation is controlled through a set of 8-bit registers. Collectively, the registers contain all the information needed to configure the DAC, such as output frequency and amplitude, output pulse levels, etc. Table 15 shows the register map.

The default state of the device at power-up, after the RESET pin is taken high or after a RESET command is as follows:

Sine mode, frequency = 31.25 Hz, –36-dB output range, 0-dB digital attenuation

Switch state: open

Table 15. Register Map

ADDRESS	REGISTER	DEFAULT	BIT 7	BIT 6	BIT 5	BIT 4	BIT 3	BIT 2	BIT 1	BIT 0
0	GANMOD	xxx11000	ID2	ID1	ID0	GAIN2	GAIN1	GAIN0	MODE1	MODE0
1	SING	00000000	SINEG7	SINEG6	SINEG5	SINEG4	SINEG3	SINEG2	SINEG1	SINEG0
2	SWM	00000000	FREQ	SW2	SW1	SW0	M3	M2	M1	M0
3	N	00000111	N7	N6	N5	N4	N3	N2	N1	N0
4	DCG0	00000000	DCG7	DCG6	DCG5	DCG4	DCG3	DCG2	DCG1	DCG0
5	DCG1	00000000	DCG15	DCG14	DCG13	DCG12	DCG11	DCG10	DCG9	DCG8
6	DCG2	00000000	DCG23	DCG22	DCG21	DCG20	DCG19	DCG18	DCG17	DCG16
7	PULSA	00000000	0	0	0	PULSA4	PULSA3	PULSA2	PULSA1	PULSA0
8	PULSB	00000000	0	0	0	PULSB4	PULSB3	PULSB2	PULSB1	PULSB0

8.5.1 Register Descriptions

Table 16. GANMOD: Range and Mode Register 0 (address = 0h)

7	6	5	4	3	2	1	0
ID2	ID1	ID0	GAIN2	GAIN1	GAIN0	MODE1	MODE0

Bits[7:5] **ID[2:0]: Factory-programmed identification bits (read-only)**

These bits may change at any time without notification.

Bits[4:2] **GAIN[2:0]: Analog gain (output range)**

These bits set the analog gain in the sine, dc, and bitstream modes. The output amplitude is the combination of the selected range and the digital gain. Sine mode digital gain is programmed by the SINEG register; dc mode digital gain are the DCG0, DCG1, and DCG2 registers. Pulse mode levels are exclusively controlled by the PULSA and PULSB registers. Note that the DAC1282A supports analog gains of 1/1, 1/4, and 1/16 only.

GAIN[2:0]	DEVICE GAIN		OUTPUT RANGE (V)(1)
000	0 dB	1/1 V/V	±2.5
001 (DAC1282 only)	–6 dB	1/2 V/V	±1.25
010	–12 dB	1/4 V/V	±0.625
011 (DAC1282 only)	–18 dB	1/8 V/V	±0.312
100	–24 dB	1/16 V/V	±0.156
101 (DAC1282 only)	–30 dB	1/32 V/V	±0.078
110 (DAC1282 only, default)(2)	–36 dB	1/64 V/V	±0.039

Bits[1:0] **MODE[1:0]: Mode control bits**

The mode bits set the mode of operation. When the mode bits are changed, the internal signal generator block is reset.

00 = Sine mode (default)
01 = DC mode
10 = Digital data mode
11 = Pulse mode

(1) (Peak-to-peak) full-scale output range, V_{REF} = 5 V. Digital gain = 0 dB.
(2) Although both devices deafult to GAIN[2:0] = 110, the DAC1282A setting must be changed to one of the supported analog gains listed.

Copyright © 2011–2015, Texas Instruments Incorporated

Table 17. SINEG: Sine Mode Digital Gain Register (address = 01h)

7	6	5	4	3	2	1	0
SINEG7	SINEG6	SINEG5	SINEG4	SINEG3	SINEG2	SINEG1	SINEG0

Bits[7:0]	**SINEG[7:0]: Sine mode digital gain** This register byte sets the sine mode digital gain from 0 dB to –119.5 dB and to full mute, in 0.5-dB steps. The sine mode digital gain can be expressed as: –DGAIN[7:0]/2 (dB) and are listed in Table 18.

Table 18. Sine Mode Digital Gain

SINEG[7:0] REGISTER	SINE MODE DIGITAL GAIN (dB)
0000 0000 (default)	0.0
0000 0001	–0.5
0000 0010	–1.0
…	…
1110 1111	–119.5
1111 0000	Full mute
…	Full mute
1111 1111	Full mute

Table 19. SWM: Switch, Output Frequency 'M', And Range Bit Register (address = 02h)

7	6	5	4	3	2	1	0
FREQ	SW2	SW1	SW0	M3	M2	M1	M0

Bit 7 — **FREQ: Frequency**

This bit sets the sine mode output frequency range; see Equation 1.

Bits[6:4] — **SW[2:0]: Switch control bits**

These bits control the switch settings when the SW/TD input is high. When SW/TD is low, the register is ignored and the switch is forced open. In digital input mode, the switch is controlled only by the register.

SW[2:0]	SWITCH DESCRIPTION	TERMINAL CONNECTIONS
000	Open (default)	All switches open
001	Differential	SWINP to SWOUTP and SWINN to SWOUTN
010	Differential reverse	SWINP to SWOUTN and SWINN to SWOUTP
011	Common-mode positive	SWINP to SWOUTP and SWINP to SWOUTN
100	Common-mode negative	SWINN to SWOUTP and SWINN to SWOUTN
101	Single-ended positive	SWINP to SWOUTP only
110	Single-ended negative	SWINN to SWOUTN only
111	Short	SWOUTP to SWOUTN

Bits[3:0] — **M[3:0]: Sine mode frequency, M bits**

These bits control the sine-mode output frequency. The output frequency is given in Equation 1.

Copyright © 2011–2015, Texas Instruments Incorporated

Table 20. N: Sine Frequency N Register (address = 03h)

7	6	5	4	3	2	1	0
N7	N6	N5	N4	N3	N2	N1	N0

Bits[7:0]	**N[7:0]: N register** These bits control the output frequency; see Equation 1.

Table 21. DCG0: DC Mode Digital Gain Byte 0, Least Significant Byte (address = 04h)

7	6	5	4	3	2	1	0
DCG7	DCG6	DCG5	DCG4	DCG3	DCG2	DCG1	DCG0

Table 22. DCG1: DC Mode Digital Gain Byte 1, Mid Byte (address = 05h)

7	6	5	4	3	2	1	0
DCG15	DCG14	DCG13	DCG12	DCG11	DCG10	DCG9	DCG8

Table 23. DCG2: DC Mode Digital Gain Byte 2, Most Significant Byte (address = 06h)

7	6	5	4	3	2	1	0
DCG23	DCG22	DCG21	DCG20	DCG19	DCG18	DCG17	DCG16

Bits[7:0]	**DCG[23:0]: DC mode digital gain setting** The DCG0, DCG1, and DCG2 register bytes set the digital gain in dc mode; see Table 5.

Table 24. PULSA: Pulse Level A Byte (address = 07h)

7	6	5	4	3	2	1	0
0	0	0	PULSA4	PULSA3	PULSA2	PULSA1	PULSA0

Bits[7:5]	**Reserved** Always write '0'.
Bits[4:0]	**PULSA[4:0]: Pulse level A bits** These bits create pulse level A. (Selected output when SYNC is low.) The PULSA and PULSB registers set two independent levels that can be used to provide pulse output. The SYNC pin selects either level PULSA or level PULSB as the DAC output. The pulse amplitude resolution is programmable in discrete steps, as shown in Table 6. Note that the pulse level value is independent of the RANGE[2:0] setting.

Table 25. PULSB: Pulse Level B Byte (address = 08h)

7	6	5	4	3	2	1	0
0	0	0	PULSB4	PULSB3	PULSB2	PULSB1	PULSB0

Bits[7:5]	**Reserved** Always write '0'.
Bits[4:0]	**PULSB[4:0]: Pulse level B bits** These bits create pulse level B. The PULSA and PULSB registers set two independent levels that can be used to provide pulse output. The SYNC pin selects either level PULSA or level PULSB as the DAC output. The pulse amplitude resolution is programmable in discrete steps; see Table 6. Note that the pulse level value is independent of the RANGE[2:0] setting.

Copyright © 2011–2015, Texas Instruments Incorporated

9 Application and Implementation

NOTE

Information in the following applications sections is not part of the TI component specification, and TI does not warrant its accuracy or completeness. TI's customers are responsible for determining suitability of components for their purposes. Customers should validate and test their design implementation to confirm system functionality.

9.1 Application Information

Figure 50 shows the basic DAC1282 connection. Bipolar analog supplies are shown (±2.5 V). Single-supply operation is also possible with AVDD = 5 V and AVSS = GND. The digital supply range is 1.65 V to 3.6 V.

A low-noise, low-drift reference is recommended for best performance, such as the REF5050 (+5 V) and REF5045 (+4.5 V). Best signal-to-noise ratio is achieved with a 5-V reference, although a 4.5-V reference (REF5045) can be used with 1-dB loss in SNR. The 4.5-V reference can be operated from a 5-V supply. AVSS (pin 14) is the key reference ground point and should be connected to the reference ground terminal using a star connection. C_1 and C_2 are the required 1-nF output filter capacitors. The capacitors should be of the low volt-coefficient type (such as a COG ceramic or similar) and placed close to the device pins. Output resistors, R_1 and R_2, decouple the DAC to ensure best performnace when driving capacitive loads. The output is shown routed to the signal switch, providing a second, switched DAC output.

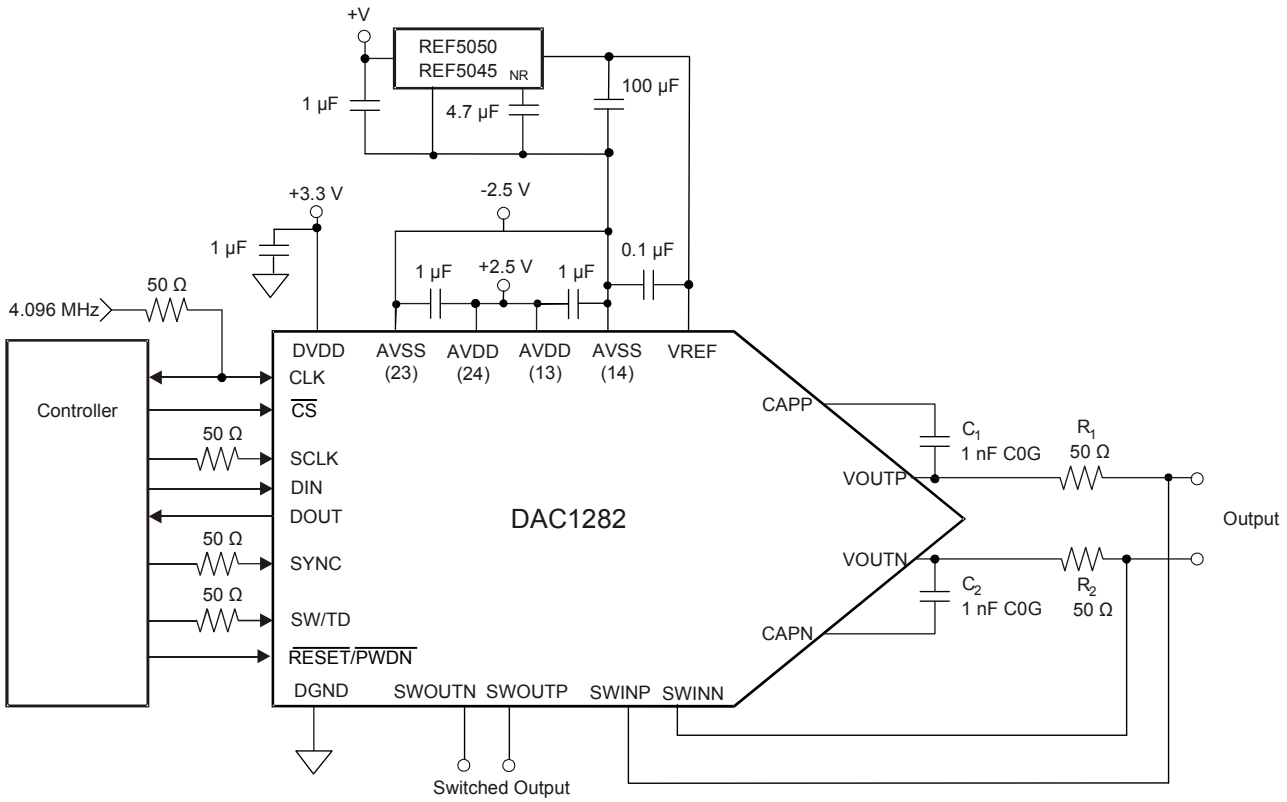

Figure 50. Basic Connection

Copyright © 2011–2015, Texas Instruments Incorporated

9.2 Typical Applications

9.2.1 Single-Channel Seismic System

Figure 51 illustrates a single-channel data acquisition concept for seismic. The DAC1282 is used to test both the ADC and geophone. The DAC1282 connects directly to channel 1 of the ADC. Tests of the ADC include THD, pulse, input noise, common-mode, etc. The DAC output and ADC sample timing are controlled by the SYNC input pins.

The geophone connects to channel 2 of the ADC through input protection and optional filter networks. The DAC connects to the geophone using the integrated signal switch. Series resistors isolate the geophone from the DAC output. Geophone test capabilities include impulse, THD, leakage, and common-mode.

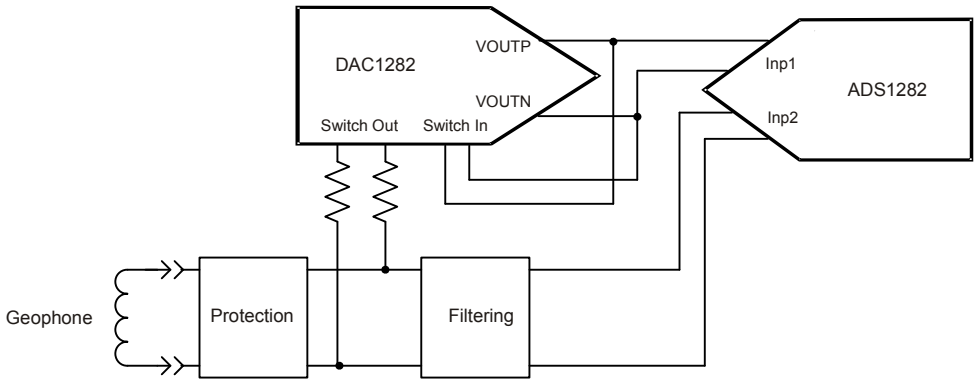

Figure 51. Single-Channel Seismic System

Typical Applications (continued)

9.2.2 Four-Channel Seismic System

Figure 52 illustrates a four-channel system. The switched DAC1282 output is routed to the ADC inputs. The signal from the DAC switch is used to perform sensor impulse testing by opening the switch while digitizing the response.

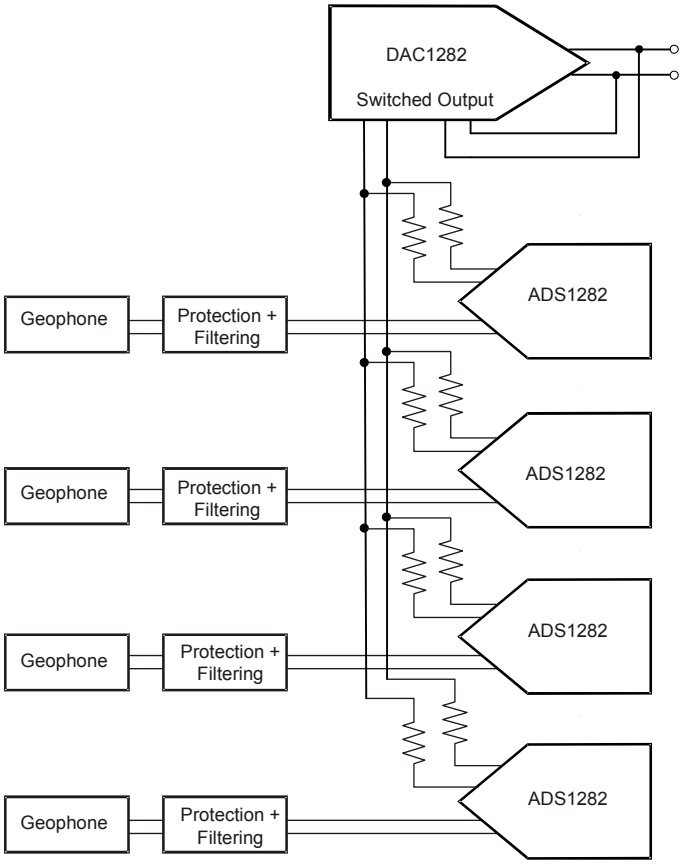

Figure 52. Four-Channel Seismic System

版权 © 2011–2015, Texas Instruments Incorporated

10 器件和文档支持

10.1 Community Resources

The following links connect to TI community resources. Linked contents are provided *AS IS* by the respective contributors. They do not constitute TI specifications and do not necessarily reflect TI's views; see TI's Terms of Use.

TI E2E™ Online Community ***TI's Engineer-to-Engineer (E2E) Community.*** Created to foster collaboration among engineers. At e2e.ti.com, you can ask questions, share knowledge, explore ideas and help solve problems with fellow engineers.

Design Support ***TI's Design Support*** Quickly find helpful E2E forums along with design support tools and contact information for technical support.

10.2 商标

E2E is a trademark of Texas Instruments.
SPI is a trademark of Motorola.
All other trademarks are the property of their respective owners.

10.3 静电放电警告

ESD 可能会损坏该集成电路。德州仪器 (TI) 建议通过适当的预防措施处理所有集成电路。如果不遵守正确的处理措施和安装程序，可能会损坏集成电路。

ESD 的损坏小至导致微小的性能降级，大至整个器件故障。 精密的集成电路可能更容易受到损坏，这是因为非常细微的参数更改都可能会导致器件与其发布的规格不相符。

10.4 术语表

SLYZ022 — *TI 术语表*。

这份术语表列出并解释术语、首字母缩略词和定义。

11 机械、封装和可订购信息

以下页中包括机械、封装和可订购信息。 这些信息是针对指定器件可提供的最新数据。 这些数据会在无通知且不对本文档进行修订的情况下发生改变。 欲获得该数据表的浏览器版本，请查阅左侧的导航栏。

重要声明

德州仪器(TI) 及其下属子公司有权根据 JESD46 最新标准, 对所提供的产品和服务进行更正、修改、增强、改进或其它更改， 并有权根据 JESD48 最新标准中止提供任何产品和服务。客户在下订单前应获取最新的相关信息, 并验证这些信息是否完整且是最新的。所有产品的销售都遵循在订单确认时所提供的TI 销售条款与条件。

TI 保证其所销售的组件的性能符合产品销售时 TI 半导体产品销售条件与条款的适用规范。仅在 TI 保证的范围内，且 TI 认为 有必要时才会使用测试或其它质量控制技术。除非适用法律做出了硬性规定，否则没有必要对每种组件的所有参数进行测试。

TI 对应用帮助或客户产品设计不承担任何义务。客户应对其使用 TI 组件的产品和应用自行负责。为尽量减小与客户产品和应 用相关的风险，客户应提供充分的设计与操作安全措施。

TI 不对任何 TI 专利权、版权、屏蔽作品权或其它与使用了 TI 组件或服务的组合设备、机器或流程相关的 TI 知识产权中授予 的直接或隐含权限作出任何保证或解释。TI 所发布的与第三方产品或服务有关的信息，不能构成从 TI 获得使用这些产品或服 务的许可、授权、或认可。使用此类信息可能需要获得第三方的专利权或其它知识产权方面的许可，或是 TI 的专利权或其它 知识产权方面的许可。

对于 TI 的产品手册或数据表中 TI 信息的重要部分，仅在没有对内容进行任何篡改且带有相关授权、条件、限制和声明的情况 下才允许进行复制。TI 对此类篡改过的文件不承担任何责任或义务。复制第三方的信息可能需要服从额外的限制条件。

在转售 TI 组件或服务时，如果对该组件或服务参数的陈述与 TI 标明的参数相比存在差异或虚假成分，则会失去相关 TI 组件 或服务的所有明示或暗示授权，且这是不正当的、欺诈性商业行为。TI 对任何此类虚假陈述均不承担任何责任或义务。

客户认可并同意，尽管任何应用相关信息或支持仍可能由 TI 提供，但他们将独力负责满足与其产品及在其应用中使用 TI 产品 相关的所有法律、法规和安全相关要求。客户声明并同意，他们具备制定与实施安全措施所需的全部专业技术和知识，可预见 故障的危险后果、监测故障及其后果、降低有可能造成人身伤害的故障的发生机率并采取适当的补救措施。客户将全额赔偿因 在此类安全关键应用中使用任何 TI 组件而对 TI 及其代理造成的任何损失。

在某些场合中，为了推进安全相关应用有可能对 TI 组件进行特别的促销。TI 的目标是利用此类组件帮助客户设计和创立其特 有的可满足适用的功能安全性标准和要求的终端产品解决方案。尽管如此，此类组件仍然服从这些条款。

TI 组件未获得用于 FDA Class III（或类似的生命攸关医疗设备）的授权许可，除非各方授权官员已经达成了专门管控此类使 用的特别协议。

只有那些 TI 特别注明属于军用等级或“增强型塑料”的 TI 组件才是设计或专门用于军事/航空应用或环境的。购买者认可并同 意，对并非指定面向军事或航空航天用途的 TI 组件进行军事或航空航天方面的应用，其风险由客户单独承担，并且由客户独 力负责满足与此类使用相关的所有法律和法规要求。

TI 已明确指定符合 ISO/TS16949 要求的产品，这些产品主要用于汽车。在任何情况下，因使用非指定产品而无法达到 ISO/TS16949 要求，TI不承担任何责任。

	产品		应用
数字音频	www.ti.com.cn/audio	通信与电信	www.ti.com.cn/telecom
放大器和线性器件	www.ti.com.cn/amplifiers	计算机及周边	www.ti.com.cn/computer
数据转换器	www.ti.com.cn/dataconverters	消费电子	www.ti.com/consumer-apps
DLP® 产品	www.dlp.com	能源	www.ti.com/energy
DSP - 数字信号处理器	www.ti.com.cn/dsp	工业应用	www.ti.com.cn/industrial
时钟和计时器	www.ti.com.cn/clockandtimers	医疗电子	www.ti.com.cn/medical
接口	www.ti.com.cn/interface	安防应用	www.ti.com.cn/security
逻辑	www.ti.com.cn/logic	汽车电子	www.ti.com.cn/automotive
电源管理	www.ti.com.cn/power	视频和影像	www.ti.com.cn/video
微控制器 (MCU)	www.ti.com.cn/microcontrollers		
RFID 系统	www.ti.com.cn/rfidsys		
OMAP应用处理器	www.ti.com/omap		
无线连通性	www.ti.com.cn/wirelessconnectivity	德州仪器在线技术支持社区	www.deyisupport.com

邮寄地址： 上海市浦东新区世纪大道1568 号，中建大厦32 楼邮政编码： 200122
Copyright © 2015, 德州仪器半导体技术（上海）有限公司

PACKAGING INFORMATION

Orderable Device	Status (1)	Package Type	Package Drawing	Pins	Package Qty	Eco Plan (2)	Lead/Ball Finish (6)	MSL Peak Temp (3)	Op Temp (°C)	Device Marking (4/5)	Samples
DAC1282AIPW	ACTIVE	TSSOP	PW	24	60	Green (RoHS & no Sb/Br)	CU NIPDAU	Level-2-260C-1 YEAR	-40 to 85	DAC1282A	Samples
DAC1282AIPWR	ACTIVE	TSSOP	PW	24	2000	Green (RoHS & no Sb/Br)	CU NIPDAU	Level-2-260C-1 YEAR	-40 to 85	DAC1282A	Samples
DAC1282IPW	ACTIVE	TSSOP	PW	24	60	Green (RoHS & no Sb/Br)	CU NIPDAU	Level-2-260C-1 YEAR	-40 to 85	DAC1282	Samples
DAC1282IPWR	ACTIVE	TSSOP	PW	24	2000	Green (RoHS & no Sb/Br)	CU NIPDAU	Level-2-260C-1 YEAR	-40 to 85	DAC1282	Samples

(1) The marketing status values are defined as follows:
ACTIVE: Product device recommended for new designs.
LIFEBUY: TI has announced that the device will be discontinued, and a lifetime-buy period is in effect.
NRND: Not recommended for new designs. Device is in production to support existing customers, but TI does not recommend using this part in a new design.
PREVIEW: Device has been announced but is not in production. Samples may or may not be available.
OBSOLETE: TI has discontinued the production of the device.

(2) Eco Plan - The planned eco-friendly classification: Pb-Free (RoHS), Pb-Free (RoHS Exempt), or Green (RoHS & no Sb/Br) - please check http://www.ti.com/productcontent for the latest availability information and additional product content details.
TBD: The Pb-Free/Green conversion plan has not been defined.
Pb-Free (RoHS): TI's terms "Lead-Free" or "Pb-Free" mean semiconductor products that are compatible with the current RoHS requirements for all 6 substances, including the requirement that lead not exceed 0.1% by weight in homogeneous materials. Where designed to be soldered at high temperatures, TI Pb-Free products are suitable for use in specified lead-free processes.
Pb-Free (RoHS Exempt): This component has a RoHS exemption for either 1) lead-based flip-chip solder bumps used between the die and package, or 2) lead-based die adhesive used between the die and leadframe. The component is otherwise considered Pb-Free (RoHS compatible) as defined above.
Green (RoHS & no Sb/Br): TI defines "Green" to mean Pb-Free (RoHS compatible), and free of Bromine (Br) and Antimony (Sb) based flame retardants (Br or Sb do not exceed 0.1% by weight in homogeneous material)

(3) MSL, Peak Temp. - The Moisture Sensitivity Level rating according to the JEDEC industry standard classifications, and peak solder temperature.

(4) There may be additional marking, which relates to the logo, the lot trace code information, or the environmental category on the device.

(5) Multiple Device Markings will be inside parentheses. Only one Device Marking contained in parentheses and separated by a "~" will appear on a device. If a line is indented then it is a continuation of the previous line and the two combined represent the entire Device Marking for that device.

(6) Lead/Ball Finish - Orderable Devices may have multiple material finish options. Finish options are separated by a vertical ruled line. Lead/Ball Finish values may wrap to two lines if the finish value exceeds the maximum column width.

Important Information and Disclaimer: The information provided on this page represents TI's knowledge and belief as of the date that it is provided. TI bases its knowledge and belief on information provided by third parties, and makes no representation or warranty as to the accuracy of such information. Efforts are underway to better integrate information from third parties. TI has taken and continues to take reasonable steps to provide representative and accurate information but may not have conducted destructive testing or chemical analysis on incoming materials and chemicals. TI and TI suppliers consider certain information to be proprietary, and thus CAS numbers and other limited information may not be available for release.

In no event shall TI's liability arising out of such information exceed the total purchase price of the TI part(s) at issue in this document sold by TI to Customer on an annual basis.

TAPE AND REEL INFORMATION

REEL DIMENSIONS

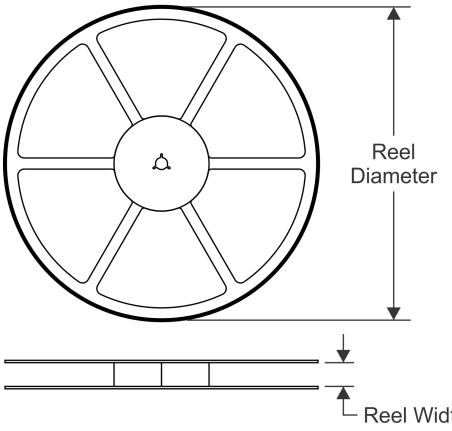

TAPE DIMENSIONS

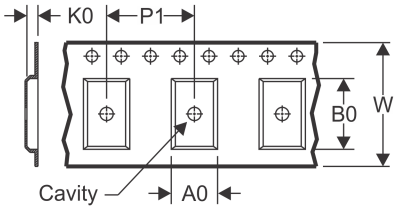

A0	Dimension designed to accommodate the component width
B0	Dimension designed to accommodate the component length
K0	Dimension designed to accommodate the component thickness
W	Overall width of the carrier tape
P1	Pitch between successive cavity centers

QUADRANT ASSIGNMENTS FOR PIN 1 ORIENTATION IN TAPE

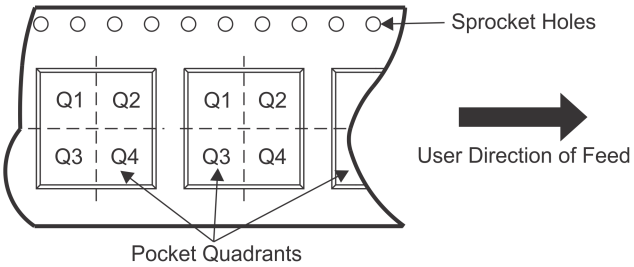

*All dimensions are nominal

Device	Package Type	Package Drawing	Pins	SPQ	Reel Diameter (mm)	Reel Width W1 (mm)	A0 (mm)	B0 (mm)	K0 (mm)	P1 (mm)	W (mm)	Pin1 Quadrant
DAC1282AIPWR	TSSOP	PW	24	2000	330.0	16.4	6.95	8.3	1.6	8.0	16.0	Q1
DAC1282IPWR	TSSOP	PW	24	2000	330.0	16.4	6.95	8.3	1.6	8.0	16.0	Q1

TAPE AND REEL BOX DIMENSIONS

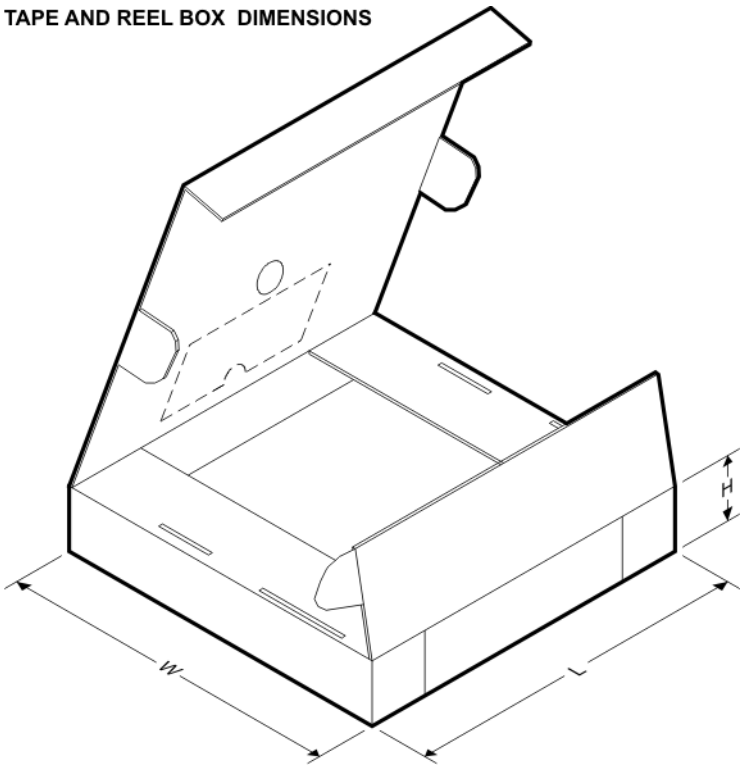

*All dimensions are nominal

Device	Package Type	Package Drawing	Pins	SPQ	Length (mm)	Width (mm)	Height (mm)
DAC1282AIPWR	TSSOP	PW	24	2000	350.0	350.0	43.0
DAC1282IPWR	TSSOP	PW	24	2000	350.0	350.0	43.0

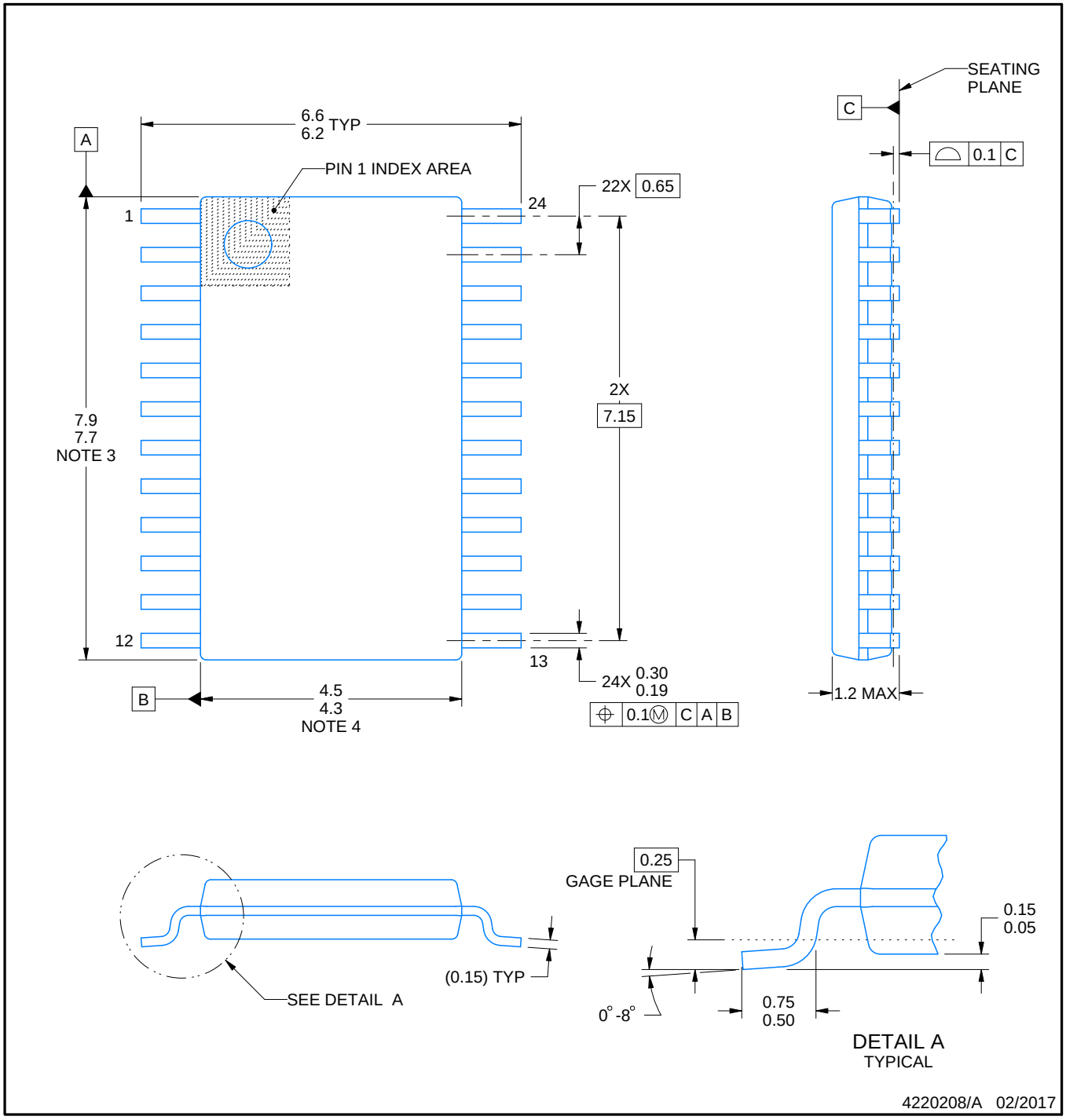

NOTES:

1. All linear dimensions are in millimeters. Any dimensions in parenthesis are for reference only. Dimensioning and tolerancing per ASME Y14.5M.
2. This drawing is subject to change without notice.
3. This dimension does not include mold flash, protrusions, or gate burrs. Mold flash, protrusions, or gate burrs shall not exceed 0.15 mm per side.
4. This dimension does not include interlead flash. Interlead flash shall not exceed 0.25 mm per side.
5. Reference JEDEC registration MO-153.

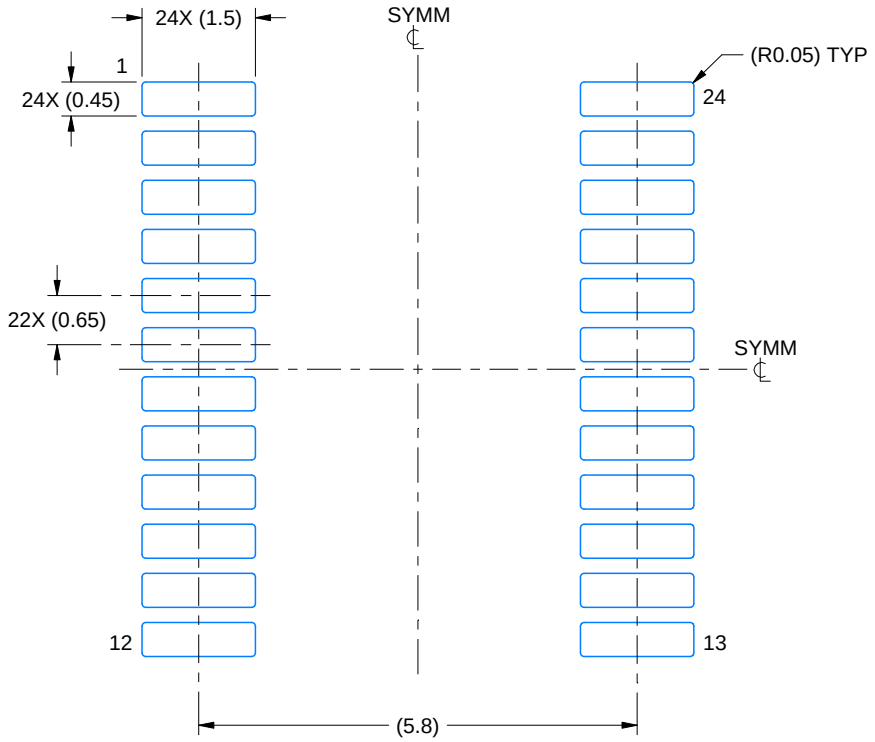

LAND PATTERN EXAMPLE
EXPOSED METAL SHOWN
SCALE: 10X

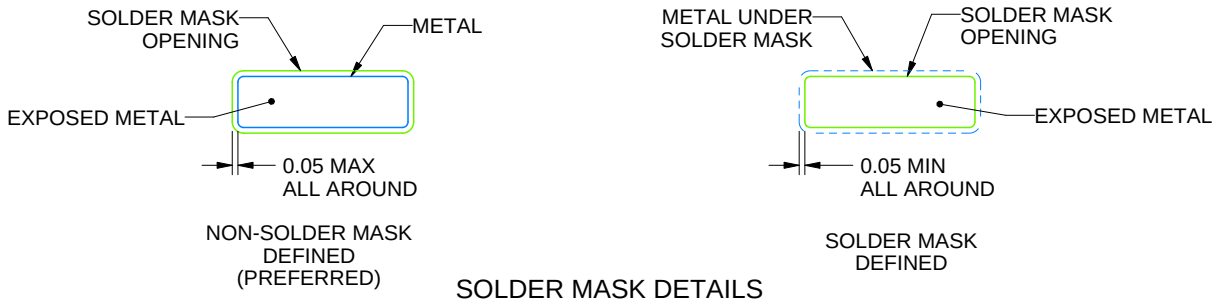

SOLDER MASK DETAILS

4220208/A 02/2017

NOTES: (continued)

6. Publication IPC-7351 may have alternate designs.
7. Solder mask tolerances between and around signal pads can vary based on board fabrication site.

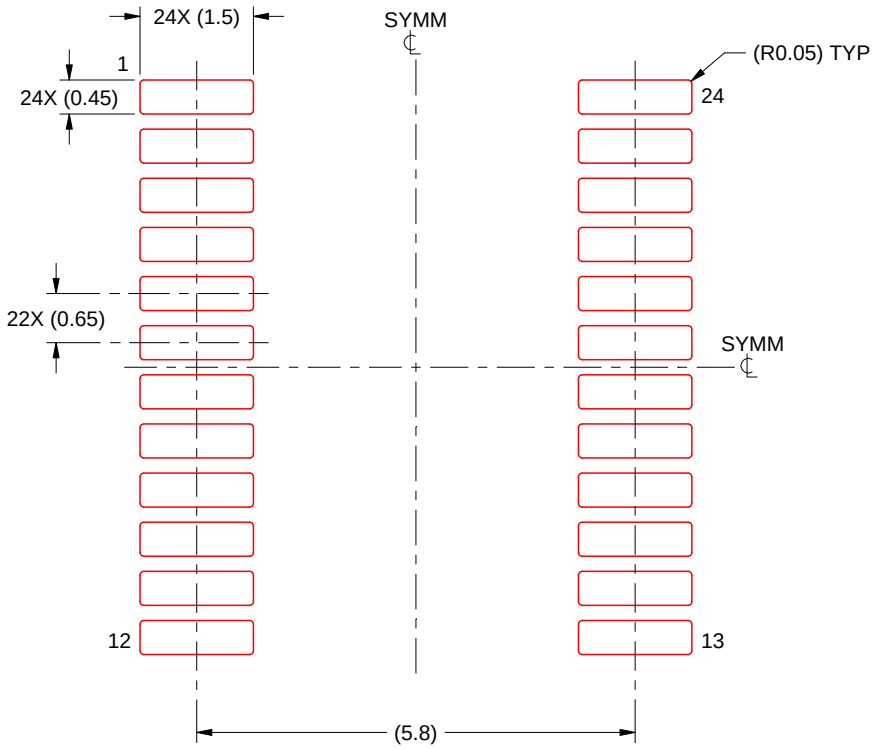

SOLDER PASTE EXAMPLE
BASED ON 0.125 mm THICK STENCIL
SCALE: 10X

4220208/A 02/2017

NOTES: (continued)

8. Laser cutting apertures with trapezoidal walls and rounded corners may offer better paste release. IPC-7525 may have alternate design recommendations.
9. Board assembly site may have different recommendations for stencil design.

重要声明和免责声明

TI 均以“原样”提供技术性及可靠性数据（包括数据表）、设计资源（包括参考设计）、应用或其他设计建议、网络工具、安全信息和其他资源，不保证其中不含任何瑕疵，且不做任何明示或暗示的担保，包括但不限于对适销性、适合某特定用途或不侵犯任何第三方知识产权的暗示担保。

所述资源可供专业开发人员应用TI 产品进行设计使用。您将对以下行为独自承担全部责任：(1) 针对您的应用选择合适的TI 产品；(2) 设计、验证并测试您的应用；(3) 确保您的应用满足相应标准以及任何其他安全、安保或其他要求。所述资源如有变更，恕不另行通知。TI 对您使用所述资源的授权仅限于开发资源所涉及TI 产品的相关应用。除此之外不得复制或展示所述资源，也不提供其它TI或任何第三方的知识产权授权许可。如因使用所述资源而产生任何索赔、赔偿、成本、损失及债务等，TI对此概不负责，并且您须赔偿由此对TI 及其代表造成的损害。

TI 所提供产品均受TI 的销售条款 (http://www.ti.com.cn/zh-cn/legal/termsofsale.html) 以及ti.com.cn上或随附TI产品提供的其他可适用条款的约束。TI提供所述资源并不扩展或以其他方式更改TI 针对TI 产品所发布的可适用的担保范围或担保免责声明。

邮寄地址：上海市浦东新区世纪大道 1568 号中建大厦 32 楼，邮政编码：200122
Copyright © 2019 德州仪器半导体技术（上海）有限公司