REVISIONS				
ZONE	REV.	DESCRIPTION	DATE	APPROVED
	A	ORIGINAL RELEASE	5/8/09	

DESCRIPTION:

PMI MODEL SFB-4G18G-5-CD-SFF-SP3T IS A THREE CHANNEL SWITCHED FILTER BANK OFFERING FAST SWITCH SPEED & HIGH REJECTION WITH LOW LOSS.

SPECIFICATIONS:

- FREQUENCY RANGE: 5 GHz TO 18 GHz
- 1dB PASSBAND: 5.35 GHz TO 18 GHz
- INSERTION LOSS: 4dB GOAL, 5dB MAX
- INSERTION LOSS FLATNESS: 1dB MAX
- REJECTION: 48dBc MIN (DC TO 4.94 GHz).
- INPUT POWER: 1 W (CW) MAX
- VSWR: 2.0:1 MAX
- IMPEDANCE: 50 OHMS
- CHANNEL TO CHANNEL ISOLATION: 70dB MIN
- SWITCHING SPEED: 50 nS MAX.
- VIDEO LEAKAGE: 10mV MAX
- PHASE CONFORMANCE (UNIT TO UNIT) SAME PATH: +/- 15° MAX
- AMPLITUDE CONFORMANCE (UNIT TO UNIT) SAME PATH: +/- 1dB MAX
- CONTROL: TTL, 3 LINES, "0V" : ON, "5V" : OFF
- POWER SUPPLY: +5VDC
-5VDC
- CONNECTOR: SMA FEMALE (REMOVABLE)
- SIZE: 2.50" (L) X 1.57" (W) X 0.75" (H)
- FINISH: GOLD PLATED, NO PAINT

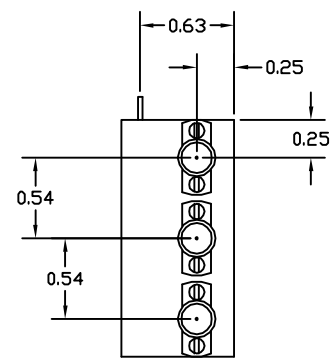

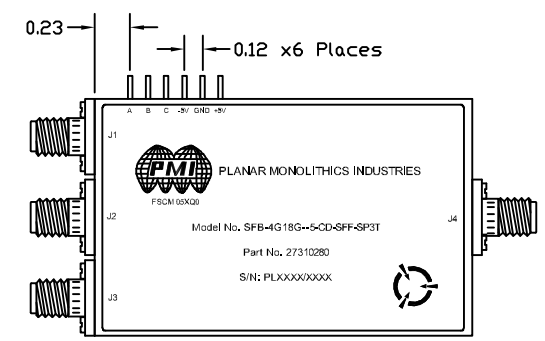

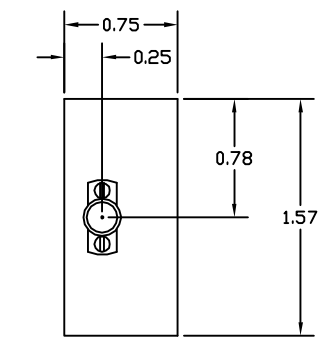

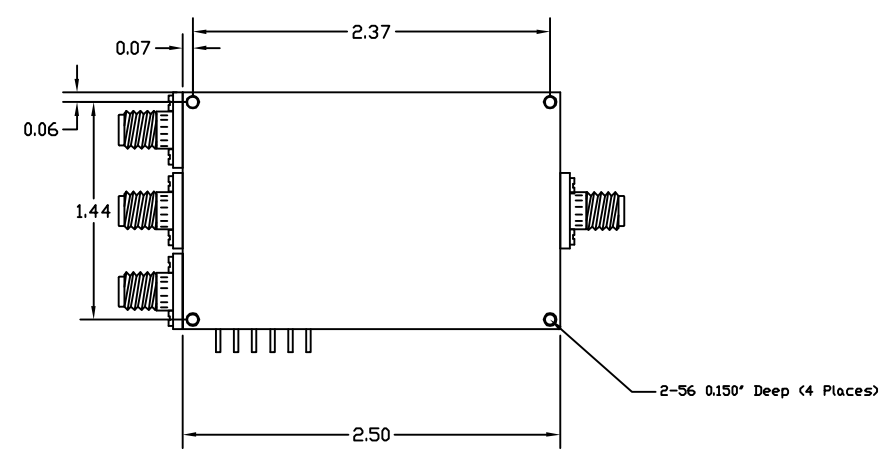

LOGIC TABLE		
A	GND : ON	J1-J4
B	GND : ON	J2-J4
C	GND : ON	J3-J4

FILTER CHARACTERISTICS	
PARAMETER	J1-J4, J2-J4, J3-J4
PASSBAND	5.35 GHz TO 18 GHz
-48dBc MIN	DC TO 4.94 GHz

ENVIRONMENTAL RATINGS:

- TEMPERATURE: -55°C TO +85°C (OPERATING)
-65°C TO +125°C (STORAGE)
- HUMIDITY: MIL-STD-202F, METHOD 103B COND. B
- SHOCK: MIL-STD-202F, METHOD 213B COND. B
- VIBRATION: MIL-STD-202F, METHOD 204D COND. B
- ALTITUDE: MIL-STD-202F, METHOD 105C COND. B
- TEMPERATURE CYCLE: MIL-STD-202F, METHOD 107D COND. A

NOTE: THE ABOVE SPECIFICATIONS ARE SUBJECT TO CHANGE OR REVISION

ALL DIMENSIONS ARE IN INCHES
TOLERANCES:
X.XX ± 0.020
X.XXX ± 0.010

PART NO.	
APPROVALS	DATE
DRAWN S. PALACIO	5/8/09
CHECKED	
ISSUED	

PLANAR MONOLITHICS INDUSTRIES
5715 INDUSTRY LANE UNIT 11
FREDERICK, MARYLAND

TITLE
OUTLINE DRAWING
SFB-4G18G-5-CD-SFF-SP3T
SWITCH FILTER

SIZE	FSCM NO.	DWG NO.	REV.
A	05XQ0	27010290	A
SCALE		SHEET 1 of 1	