REVISIONS				
ZONE	REV.	DESCRIPTION	DATE	APPROVED
	A	ORIGINAL RELEASE	2/12/13	

DESCRIPTION:

Model No: 7HP-800-600-3A-SMF is a broadband High Pass Filter used to reject video transient. It will be machined and silver plated to provide the highest possible Q.

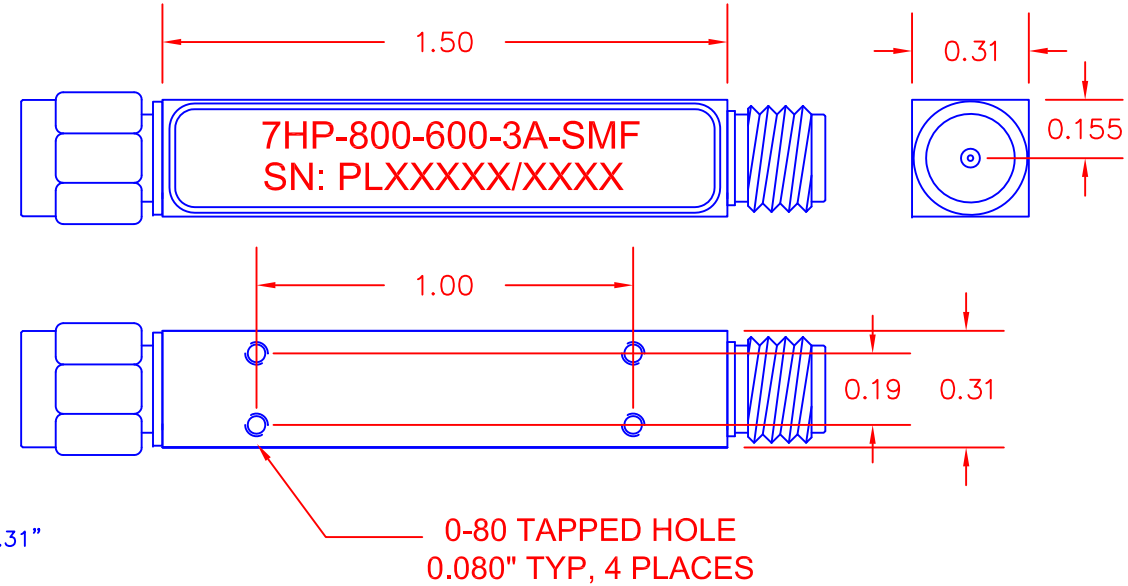

SPECIFICATIONS:

- PASSBAND: ..... 0.8 GHz TO 10 GHz
- 3dB CUTOFF: 780MHz
- VSWR IN THE PASSBAND: ..... 2.0:1 MAX
- INSERTION LOSS (PASSBAND): ..... ≤ −1dB MAX
- REJECTION @ 500MHz: ..... −40dB
- CONNECTOR – INPUT: ..... SMA MALE
- CONNECTOR – OUTPUT: ..... SMA FEMALE
- SIZE: ..... (L)1.50" X (W)0.31" X (H)0.31"
- FINISH: ..... PAINTED GRAY

PMI CONFIDENTIAL AND PROPRIETARY

ENVIRONMENTAL RATINGS:

Temperature:	-55°C to + 85°C (OPERATING)
	-65°C to +125°C (STORAGE)
Humidity:	MIL-STD-202F, METHOD 103B COND B.
Shock:	MIL-STD-202F, METHOD 213B COND B.
Vibration:	MIL-STD-202F, METHOD 204D COND B.
Altitude:	MIL-STD-202F, METHOD 105C COND B.
Temperature Cycle:	MIL-STD-202F, METHOD 107D COND A

Note: The above specifications are subject to change or revision.

ALL DIMENSIONS ARE IN INCHES
TOLERANCES:
X.XX ±0.010
X.XXX ±0.005

PLANAR MONOLITHICS INDUSTRIES, INC.
7311-F GROVE ROAD
FREDERICK, MARYLAND 21704 USA
TEL: 301-662-5019 FAX: 301-662-1731
WEBSITE: www.pmi-rf.com
E-MAIL: sales@pmi-rf.com
ISO 9001:2000 CERTIFIED

APPROVALS	DATE
DRAWN sfk	2/12/13
CHECKED	
ISSUED	

TITLE: PRODUCT FEATURE 7HP−800−600−3A−SMF

SIZE	FSCM NO.	DWG NO.	REV.
A	05XQ0	27018451	A

SCALE N:S | SHEET 1 OF 1