PART NUMBER	ITEM ① BODY	ITEM ② CONTACT	ITEM ③ INTERFACE	ITEM ④ INSULATOR	ITEM ⑤ RESISTOR
133-3801-B01	BRASS GOLD PL .00001 MIN OVER NICKEL PL .00005 MIN OVER COPPER PL .00005 MIN	BRASS GOLD PL .00003 MIN OVER NICKEL PL .00005 MIN OVER COPPER PL .00005 MIN	BERYLLIUM COPPER GOLD PL .00003 MIN OVER NICKEL PL .00005 MIN OVER COPPER PL .00005 MIN	TEFLON	50 OHM +-1%
133-3801-B06	BRASS NICKEL PL .0001 MIN OVER COPPER PL .00005 MIN	BRASS GOLD PL .00003 MIN OVER NICKEL PL .00005 MIN OVER COPPER PL .00005 MIN	BERYLLIUM COPPER NICKEL PL .0001 MIN OVER COPPER PL .00005 MIN	TEFLON	50 OHM +-1%

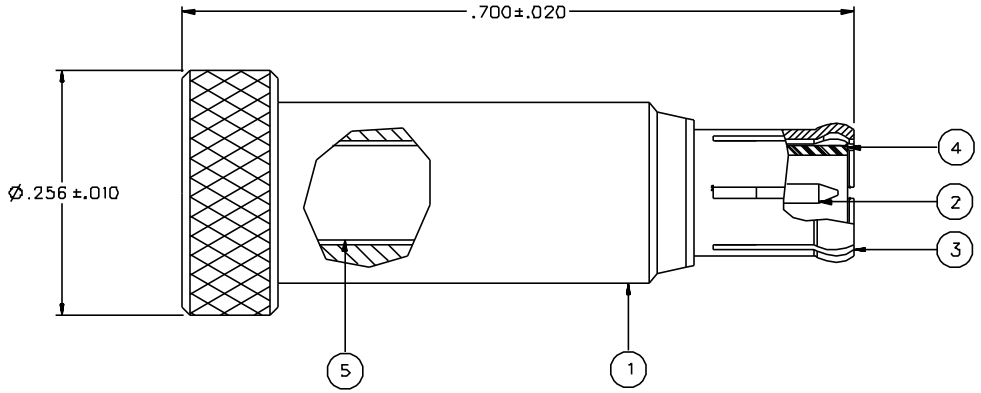

NOTES:

1. SPECIFICATIONS:

RESISTANCE: 50+-5% OHMS
FREQUENCY RANGE: 0-3 GHz
VSWR: NOT APPLICABLE
MAXIMUM POWER: 0.5 WATT TO 25°C, DERATED TO 0.25 WATT AT +125°C
CONTACT RESISTANCE:
CENTER CONTACT - INITIAL 5 MILLIOHM MAX, AFTER ENVIRONMENTAL 8 MILLIOHM MAX
OUTER CONDUCTOR - GOLD PLATED INITIAL 1 MILLIOHM MAX, AFTER ENVIRONMENTAL 1.5 MILLIOHM MAX
NICKEL PLATED INITIAL 2.5 MILLIOHM MAX, AFTER ENVIRONMENTAL 3.5 MILLIOHM MAX

MECHANICAL:

ENGAGE/DISENGAGE FORCE: 5.6 LBS MAX ENGAGEMENT
1.0/8.0 LBS MIN/MAX DISENGAGEMENT
CONTACT RETENTION FORCE: 2.3 LBS MIN AXIAL FORCE
DURABILITY: 500 CYCLES MIN

ENVIRONMENTAL:

OPERATING TEMPERATURE: -65 DEG C TO 125 DEG C

DRAWING NO.
C - 133-3801-801/810

0	REVISIONS				
ENGINEERING RELEASE					
1	9-19-96	RH	9		9-30-96 ECN 44302
CHANGED: VSWR: NOT APPLICABLE WAS 2.0 MAXIMUM					
2	1-5-98	RH	AS	RJ	8	ECN 45142
CHANGED: 5.6 LBS MAXENGAGE WAS 3.4 LBS, 1.0/8.0 MIN/MAX DISENGAGE WAS 5 LBS TYPICAL, 2.3 LBS RETENTION WAS 4 LBS					
* REVISION NUMBER FOLLOWED BY AN ALPHA CHARACTER INDICATES DRAWING CLARIFICATION OR PART NUMBER ADDITION ONLY. *					
2a	10-11-00	RH	1		ECN 47341

CUSTOMER DRAWING

THIS DRAWING TO BE INTERPRETED PER ANSIY 14.5M - 1982

"μSTATION"

COMPANY CONFIDENTIAL

TOLERANCE UNLESS OTHERWISE SPECIFIED		DRAWN BY RJB	DATE 8-29-96	Johnson Components 299 Johnson Ave. P.O. Box 1732 Waseca, MN 56093-0832
DECIMALS .XX	mm	CHECKED BY	DATE	TITLE PLUG ASSEMBLY, RESISTOR LOAD, 50 OHM MCX
.XXX		APPROVED BY RJB	DATE 9-19-96	
MATL		APPROVED BY	DATE	CODE NO. / DRAWING NO. C - 133-3801-801/810
FINISH		RELEASE DATE 9-30-96		SCALE 10:1 / U/M INCH / SHEET 2 OF 2