PART NUMBER	ITEM ① BODY	ITEM ② CONTACT	ITEM ③ INTERFACE	ITEM ④ INSULATOR	ITEM ⑤ INSULATOR	ITEM ⑥ CRIMP SLEEVE	ITEM ⑦ END CAP
133-5402-101	BRASS GOLD PL .00001 MIN OVER NICKEL PL .00005 MIN OVER COPPER PL .00005 MIN	BERYLLIUM COPPER GOLD PL .00003 MIN OVER NICKEL PL .00005 MIN OVER COPPER PL .00005 MIN	BERYLLIUM COPPER GOLD PL .00003 MIN OVER NICKEL PL .00005 MIN OVER COPPER PL .00005 MIN	TEFLON	TEFLON	COPPER GOLD PL .00001 MIN OVER NICKEL PL .00005 MIN OVER COPPER PL .00005 MIN	BRASS GOLD PL .00001 MIN OVER NICKEL PL .00005 MIN OVER COPPER PL .00005 MIN
133-5402-106	BRASS NICKEL PL .0001 MIN OVER COPPER PL .00005 MIN	BERYLLIUM COPPER GOLD PL .00003 MIN OVER NICKEL PL .00005 MIN OVER COPPER PL .00005 MIN	BERYLLIUM COPPER NICKEL PL .0001 MIN OVER COPPER PL .00005 MIN	TEFLON	TEFLON	COPPER NICKEL PL .0001 MIN OVER COPPER PL .00005 MIN	BRASS NICKEL PL .0001 MIN OVER COPPER PL .00005 MIN

DRAWING NO.
C - 133-5402-101/110

	REVISIONS
0	ENGINEERING RELEASE
1	1-26-99 R H S I R B 2-19-99 ECN 46047

CHANGED: -55 DB RF LEAK WAS -70 DB, 5.6 LBS MAX ENGAGE WAS 3.4 LBS, 1.0/8.0 LBS MIN/MAX DISENGAGE WAS 5 LBS TYPICAL, 2.3 LBS MIN RETENTION WAS 4 LBS

* REVISION NUMBER FOLLOWED BY AN ALPHA * CHARACTER INDICATES DRAWING CLARIFI- * CATION OR PART NUMBER ADDITION ONLY. *

1a	10-13-00	R H A J	ECN 47357

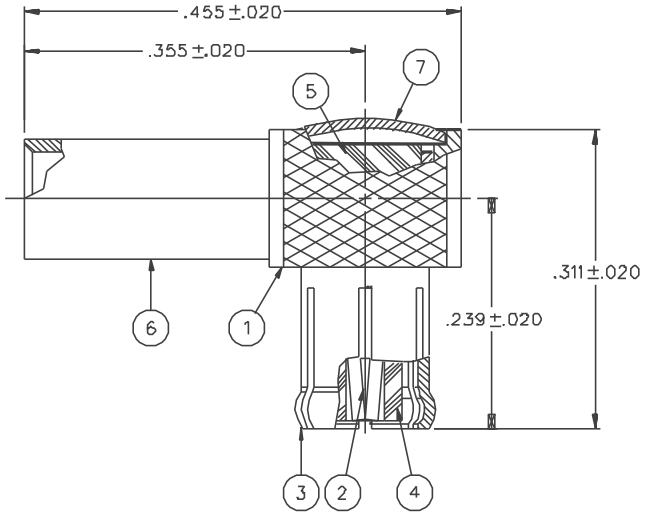

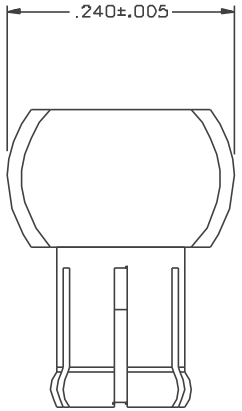

NOTES:

1. SPECIFICATIONS:

IMPEDANCE: 50 OHMS
FREQUENCY RANGE: 0-6 GHz
VSWR: 1.07+.06F MAX (F IN GHz)
WORKING VOLTAGE: 250 VRMS MAX AT SEA LEVEL
DIELECTRIC WITHSTANDING VOLTAGE: 750 VRMS MIN AT SEA LEVEL
INSULATION RESISTANCE: 10000 MEGOHM MIN
CONTACT RESISTANCE:
CENTER CONTACT - INITIAL 5 MILLIOHM MAX, AFTER ENVIRONMENTAL 15 MILLIOHM MAX
OUTER CONDUCTOR - GOLD PLATED INITIAL 1 MILLIOHM MAX, AFTER ENVIRONMENTAL 1.5 MILLIOHM MAX
NICKEL PLATED INITIAL 2.5 MILLIOHM MAX, AFTER ENVIRONMENTAL 3.5 MILLIOHM MAX
BODY TO CABLE - GOLD PLATED INITIAL 1 MILLIOHM MAX, AFTER ENVIRONMENTAL NOT APPLICABLE
NICKEL PLATED INITIAL 2.5 MILLIOHM MAX, AFTER ENVIRONMENTAL NOT APPLICABLE
CORONA LEVEL: 190 VOLTS MINIMUM AT 70,000 FEET
INSERTION LOSS: .2 DB MAX AT 1 GHz
RF LEAKAGE: -55 DB AT 2.5 GHz
RF HIGH POTENTIAL WITHSTANDING VOLTAGE: 500 VRMS AT 4 AND 7 MHz

MECHANICAL:

ENGAGE/DISENGAGE FORCE: 5.6 LBS MAX ENGAGEMENT
1.0/8.0 LBS MIN/MAX DISENGAGEMENT
CONTACT RETENTION FORCE: 2.3 LBS MIN AXIAL FORCE
CONTACT RETENTION TORQUE: NOT APPLICABLE
COUPLING MECHANISM RETENTION: NOT APPLICABLE
CABLE ACCEPTABILITY: RG 178/U, RG 196/U
CABLE HEX CRIMP SIZE: .105
CABLE RETENTION: 10 LBS MIN AXIAL FORCE
DURABILITY: 500 CYCLES MIN

ENVIRONMENTAL:

(MEETS OR EXCEEDS THE APPLICABLE PARAGRAPH OF MIL-C-39012)
THERMAL SHOCK: MIL-STD-202, METHOD 107, CONDITION F
OPERATING TEMPERATURE: -65 DEG C TO 165 DEG C
CORROSION: MIL-STD-202, METHOD 101, CONDITION B
SHOCK: MIL-STD-202, METHOD 213, CONDITION B
VIBRATION: MIL-STD-202, METHOD 204, CONDITION B
MOISTURE RESISTANCE: MIL-STD-202, METHOD 106

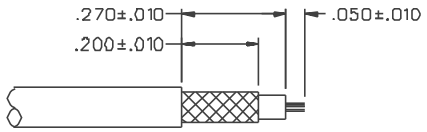

CABLE STRIP DIMENSIONS

CUSTOMER DRAWING

THIS DRAWING TO BE INTERPRETED PER ANSI Y 14.5M - 1982

"μSTATION"

COMPANY CONFIDENTIAL

TOLERANCE UNLESS OTHERWISE SPECIFIED DECIMALS / mm .XX ——— ——— .XXX REF ——— MATL ——— FINISH ———	DRAWN BY SWC	DATE 8-10-98	Johnson Components 299 Johnson Ave. P.O. Box 1732 Waseca, MN 56093-0832
	CHECKED BY SWC	DATE 1-27-99	TITLE PLUG ASSEMBLY, RIGHT ANGLE CABLED, REVERSE POLARITY MCX, RG 178
	APPROVED BY TAK	DATE 2-2-99	CODE NO.
	APPROVED BY RJB	DATE 2-2-99	DRAWING NO. C - 133-5402-101/110
	RELEASE DATE 2-19-99		SCALE 10:1 / U/M INCH / SHEET 2 OF 2