PART NUMBER	ITEM ① BODY	ITEM ② CONTACT	ITEM ③ INSULATOR	ITEM ④ NUT	ITEM ⑤ WASHER
133-5701-BD1	BRASS GOLD PL .00001 MIN OVER NICKEL PL .DDDD5 MIN OVER COPPER PL .00005 MIN	BRASS GOLD PL .00003 MIN OVER NICKEL PL .00005 MIN OVER COPPER PL .00005 MIN	TEFLON	BRASS GOLD PL .00DD1 MIN OVER NICKEL PL .00005 MIN OVER COPPER PL .00005 MIN	PHOSPHOR BRONZE GOLD PL .DDDD1 MIN OVER NICKEL PL .00005 MIN OVER COPPER PL .00005 MIN
133-5701-BD6	BRASS NICKEL PL .DDD1 MIN OVER COPPER PL .00005 MIN	BRASS GOLD PL .00003 MIN OVER NICKEL PL .00005 MIN OVER COPPER PL .00005 MIN	TEFLON	BRASS NICKEL PL .00001 MIN OVER COPPER PL .00005 MIN	PHOSPHOR BRONZE NICKEL PL .00001 MIN OVER COPPER PL .00005 MIN

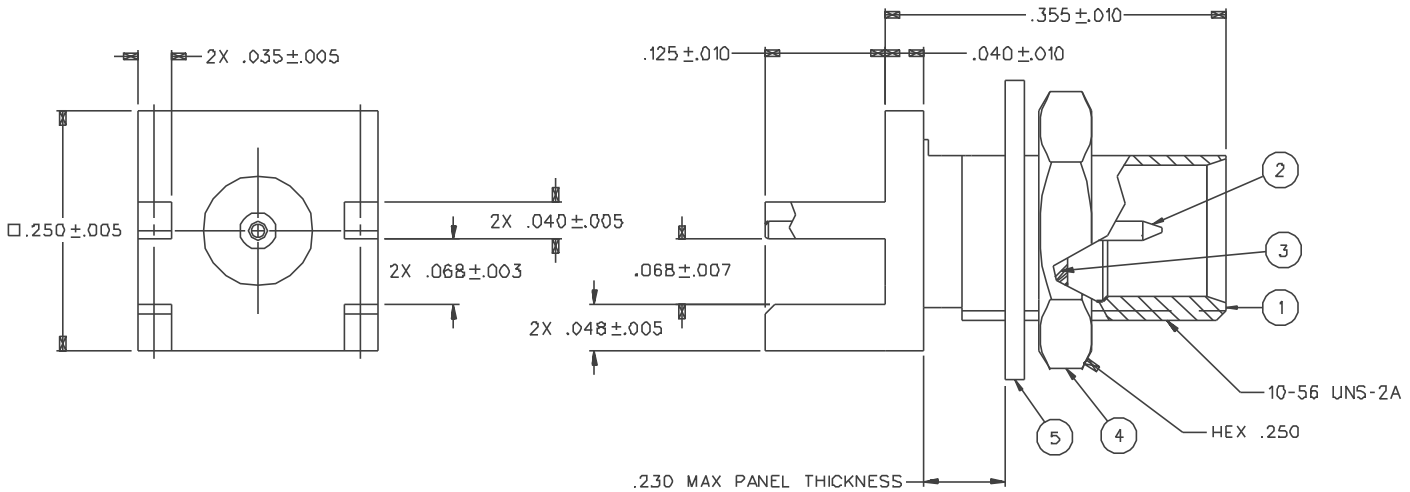

NOTES:

1. SPECIFICATIONS:

IMPEDANCE: 50 OHMS
FREQUENCY RANGE: 0-6 GHz
VSWR: NOT APPLICABLE
WORKING VOLTAGE: 335 VRMS MAX AT SEA LEVEL
DIELECTRIC WITHSTANDING VOLTAGE: 1000 VRMS MIN AT SEA LEVEL
INSULATION RESISTANCE: 10000 MEGOHM MIN
CONTACT RESISTANCE:
CENTER CONTACT - INITIAL 5 MILLIOHM MAX, AFTER ENVIRONMENTAL 8 MILLIOHM MAX
OUTER CONDUCTOR - GOLD PLATED INITIAL 1 MILLIOHM MAX, AFTER ENVIRONMENTAL 1.5 MILLIOHM MAX
NICKEL PLATED INITIAL 2.5 MILLIOHM MAX, AFTER ENVIRONMENTAL 3.5 MILLIOHM MAX
BRAID TO BODY - NOT APPLICABLE
CORONA LEVEL: 250 VOLTS MINIMUM AT 70,000 FEET
INSERTION LOSS: NOT APPLICABLE
RF LEAKAGE: NOT APPLICABLE
RF HIGH POTENTIAL WITHSTANDING VOLTAGE: 600 VRMS AT 4 AND 7 MHZ

MECHANICAL:

ENGAGE/DISENGAGE FORCE: 5.6 LBS MAX ENGAGEMENT
1.0 LB MIN DISENGAGEMENT,
8.0 LBS MAX DISENGAGEMENT
CONTACT RETENTION FORCE: 2.3 LBS MIN AXIAL FORCE
CONTACT RETENTION TORQUE: NOT APPLICABLE
COUPLING MECHANISM RETENTION: NOT APPLICABLE
CABLE ACCEPTABILITY: NOT APPLICABLE
CABLE HEX CRIMP SIZE: NOT APPLICABLE
CABLE RETENTION: NOT APPLICABLE
DURABILITY: 500 CYCLES MIN

ENVIRONMENTAL:

(MEETS OR EXCEEDS THE APPLICABLE PARAGRAPH OF MIL-C-39012)
THERMAL SHOCK: MIL-STD-202, METHOD 107, CONDITION F
OPERATING TEMPERATURE: -65 DEG C TO 165 DEG C
CORROSION: MIL-STD-202, METHOD 101, CONDITION B
SHOCK: MIL-STD-202, METHOD 213, CONDITION B
VIBRATION: MIL-STD-202, METHOD 204, CONDITION B
MOISTURE: MIL-STD-202, METHOD 106

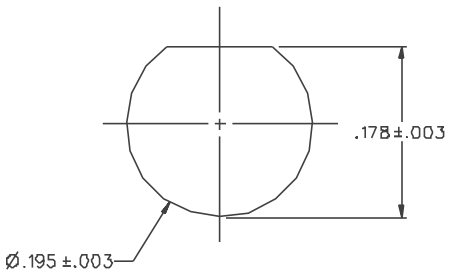

MOUNTING HOLE LAYOUT

DRAWING NO. C - 133-5701-801/810

0	REVISIONS		
ENGINEERING RELEASE			
1	2-15-99	R H S W I A R A B A	3-12-99 ECN 46095
2.3 LBS MIN CONTACT RETENTION FORCE WAS 4 LBS MIN			
1a	8-4-99	R H S W I A B A	ECN 465B1
CHANGED: 2X .035+-.DD5 WAS 2X .032+-.005, .040+-.010 WAS .050 +-.010, 5.6 LBS MAX ENGAGEMENT WAS 3.4 LBS, 1.0 LB MIN DISENGAGEMENT, 8.0 LBS MAX DISENGAGEMENT WAS 5 LBS TYPICAL DISENGAGEMENT			
* REVISION NUMBER FOLLOWED BY AN ALPHA * CHARACTER INDICATES DRAWING CLARIFICATION OR PART NUMBER ADDITION ONLY. *			
1b	6-7-01	R H T A I A	ECN 47558

CUSTOMER DRAWING

THIS DRAWING TO BE INTERPRETED PER ANSI Y 14.5M - 1982

"μSTATION"

COMPANY CONFIDENTIAL

TOLERANCE UNLESS OTHERWISE SPECIFIED DECIMALS / mm .XX ——— ——— .XXX ——— ——— MATL ——— FINISH ———	DRAWN BY SWC	DATE 8-28-98	Johnson Components 299 Johnson Ave. P.O. Box 1732 Waseca, MN 56093-0832
	CHECKED BY SWC	DATE 2-15-99	TITLE JACK ASSEMBLY BULKHEAD ENDLAUNCH REVERSE POLARITY MCX
	APPROVED BY TAK	DATE 2-18-99	CODE NO.
	APPROVED BY RJB	DATE 2-18-99	DRAWING NO. C - 133-5701-801/810
	RELEASE DATE 3-12-99		SCALE 10:1 / U/M INCH / SHEET 2 OF 2