MATERIALS AND FINISHES:

BODY: STAINLESS STEEL
FINISH: PASSIVATED

CENTER CONTACT: BERYLLIUM COPPER
FINISH: GOLD

INSULATOR: TEFLON

SCREW: STEEL

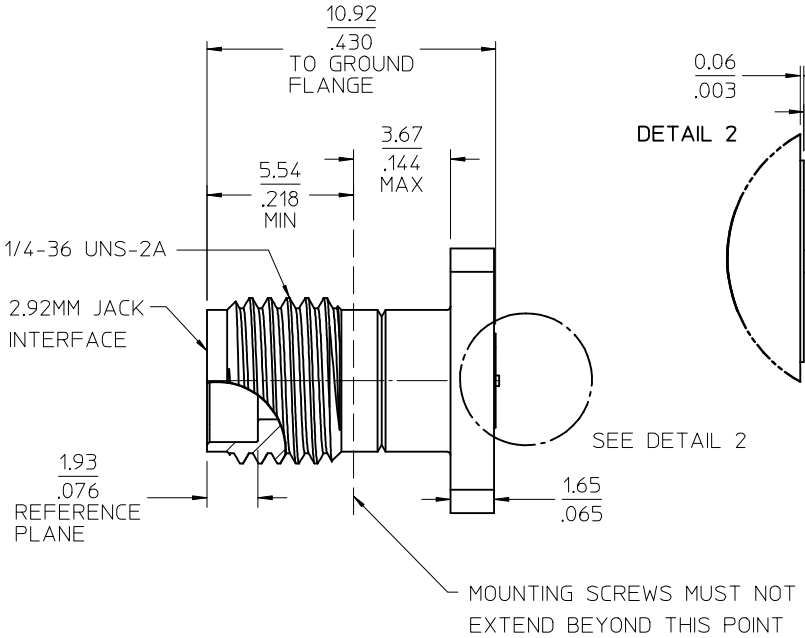

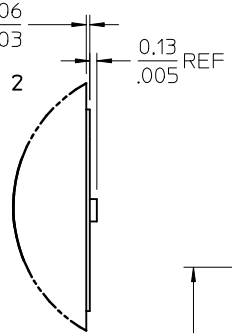

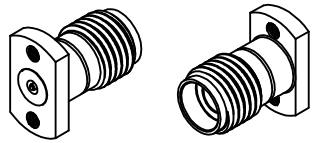

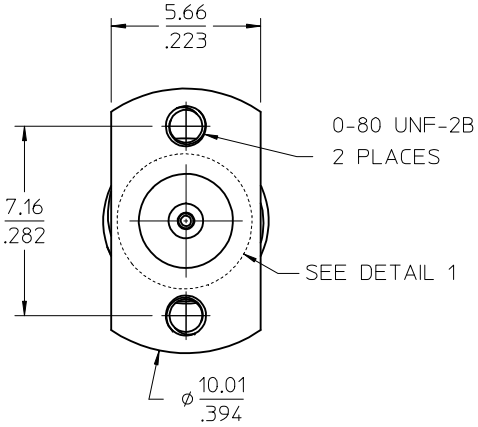

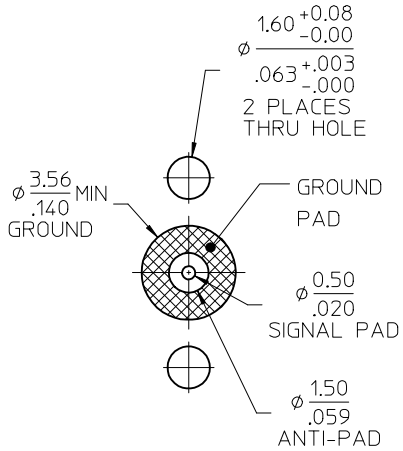

GENERAL PCB LAYOUT
FOR OPTIMIZED LAYOUTS
CONTACT MOLEX ENGINEERING

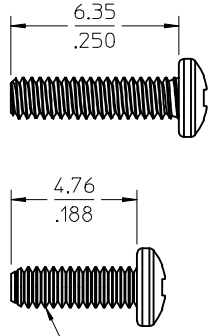

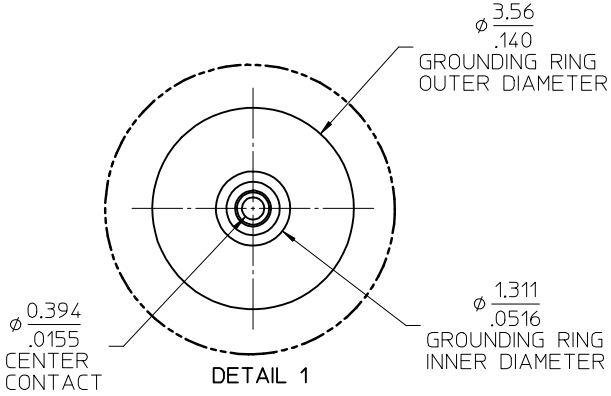

NOTE:
PATENT PENDING

PART NO.	DESCRIPTION	PCB THICKNESS MM (IN)
73252-0092	NO SCREWS	
73252-0091	WITH TWO 6.35/.25 SCREWS	1.78(.070) TO 3.94(.155)
73252-0090	WITH TWO 4.76/.19 SCREWS	0.76(.030) TO 2.44(.096)

CHG: UPDATED VIEWS .110 .096 PCB WAS .155 PCB WAS .187
EC NO: URF2014-0056 2013/07/22
DRWN: JWIENER 2013/07/22
CHKD: SSS 2013/07/29
APPR: JWIENER
DESCRIPTION
REV

A4

QUALITY SYMBOLS
▼=0
▽=0

GENERAL TOLERANCES (UNLESS SPECIFIED)

	mm	INCH
4 PLACES	± ---	± ---
3 PLACES	± ---	± ---
2 PLACES	± ---	± ---
1 PLACE	± ---	± ---
ANGULAR ± 2 °		

DRAFT WHERE APPLICABLE MUST REMAIN WITHIN DIMENSIONS

DIMENSION STYLE: MM/IN
SCALE:
DESIGN UNITS: METRIC
THIRD ANGLE PROJECTION

DRAWN BY: JLEE02 DATE: 2011/11/22
CHECKED BY: SSS DATE: 2011/11/22
APPROVED BY: JWIENER DATE: 2012/02/06
MATERIAL NO.: SEE TABLE

TITLE: 2.92MM JACK, PCB FIELD REPLACEABLE EWR-4834, 2.92-JR/F
MOLEX INCORPORATED
DOCUMENT NO.: SD-73252-009
SHEET NO.: 1 OF 1
SIZE: C

THIS DRAWING CONTAINS INFORMATION THAT IS PROPRIETARY TO MOLEX INCORPORATED AND SHOULD NOT BE USED WITHOUT WRITTEN PERMISSION