1.0 PERFORMANCE
1.1 FREQUENCY RANGE: DC–12.4 GHz
1.2 NOMINAL IMPEDANCE: 50 OHMS
1.3 DWV: 1,500 Vrms, 60 Hz
1.4 TEMPERATURE RANGE: –65/+160°C

2.0 MATERIALS: RoHS
2.1 BODY: SS–303
2.2 DIELECTRIC: PTFE
2.3 CONTACT: BeCu

3.0 FINISHES: SEE TABLE

3.0 MECHANICAL
3.1 INTERFACE: MIL–STD–348
3.2 CONTACT RETENTION: 6 LBS AXIAL
3.3 DURABILITY: 500 CYCLES

DWG NO.	REV.
OL–0406–320–1	A

PART NUMBER	BODY	CONTACT
0406–320–PJ	PASSIVATE	Au/NI

PLATING PER SAN–TRON SPEC. 7.3.1–8

DO NOT SCALE DRAWING

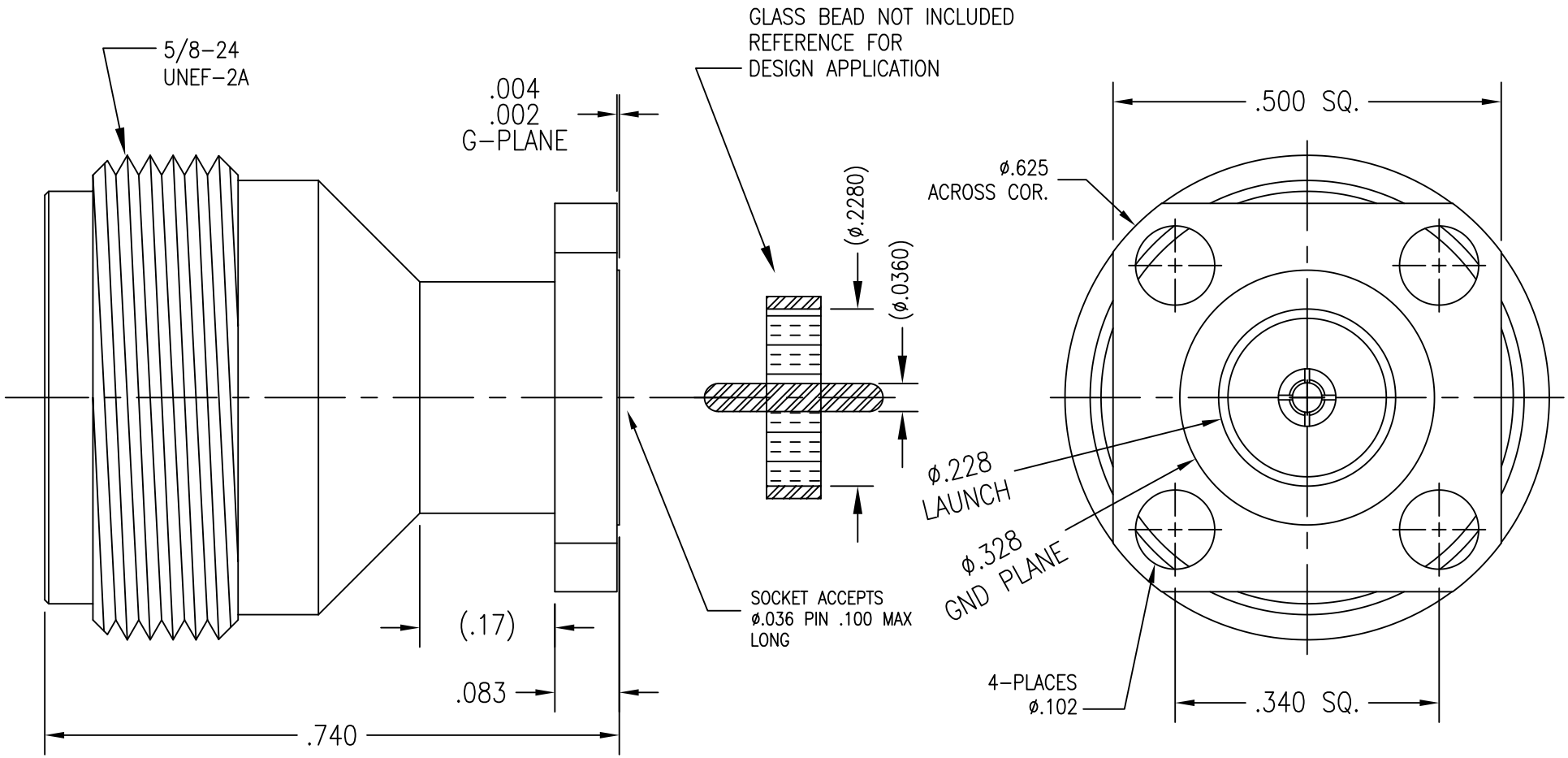

Rev.	Revisions		Disp.	Date	Dwn.	Appd.
A	ISSUE		NEW	11/22/10		

Ref.: BRM16735–1
0406–316–PJ

REMOVE ALL BURRS AND SHARP EDGES .005 MAX.

INTERPRET PER ASME Y14.5M–1994

THIS DRAWING CONTAINS CONFIDENTIAL INFORMATION PROPRIETARY TO SAN–TRON, INC. IT MUST NOT BE REPRODUCED OR DISCLOSED TO OTHERS OR USED IN ANY OTHER WAY, IN WHOLE OR PART EXCEPT AS AUTHORIZED IN WRITING BY SAN–TRON, INC.

UNLESS OTHERWISE SPECIFIED:
ALL DIMENSIONS ARE IN INCHES.
ALL DIMENSIONS ARE AFTER PLATING.
.XXX= ±.005 ALL MACHINED SURFACES 64 MAX.
.XX= ±.01 ANG.±1/2° FRACTIONAL= ±1/64
⌖ .004 MAX. TIR. ⊥ AXIS .001

THIRD ANGLE PROJECTION

DWN	FSH	11/18/10
CHKD	SJS	11/22/10
APPR	FSH	11/18/10

SAN-TRON, INC.
4 NEWBURYPORT TPK. IPSWICH MA USA 01938
TEL: 978 - 356 -1585 FAX: 978 - 356 -1573
WWW. santron.com E MAIL: santron@santron.com

TITLE N PANEL RECEPTACLE, .500 FLANGE, FR ø.036

MATERIAL:

FINISH: SEE TABLE

CAGE CODE: 50896

SCALE X:X

DWG NO. OL–0406–320–1 REV. A