REVISIONS			
REV	DESCRIPTION	DATE	BY
–	INITIAL RELEASE	01.04.12	DKN

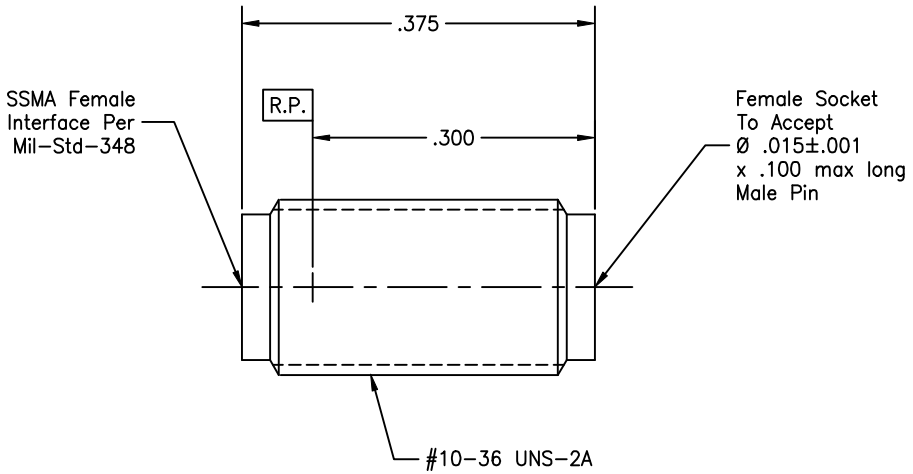

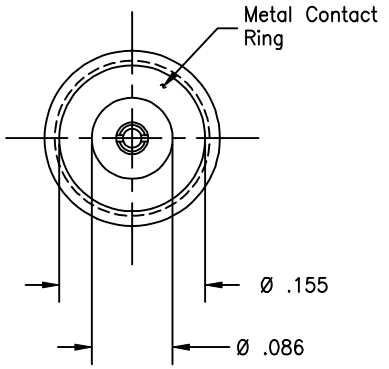

MATERIAL(S):

Body:
303 sst per ASTM A–582.
Center Conductor:
BeCu alloy per ASTM B–196.
Dielectric:
PTFE per ASTM D–1710.
Bead Ring:
Ultem 1000 per ASTM D–5205.

ELECTRICAL(S):

Impedance: 50 Ohms nominal.
Frequency Range: DC to 36.0 GHz.
VSWR: 1.10:1 max up to 18GHz.
1.15:1 max 18.0 to 27.0 GHz.
1.25:1 max 27.0 to 36.0 GHz.
Insertion Loss: .035 $\sqrt{f\ (GHz)}$ dB.
Working Voltage: 335 Vrms max @ sea level.
Dielectric Withstanding Voltage: 1,000 Vrms min.
R.F. HiPot Voltage: 670 Vrms min @ 5MHz.
Corona Level: 250 Vrms @ 70,000 ft.
Insulation Resistance: 5,000 MegOhms min.
R.F. Leakage: –(90 – fGHz) dB min.
Contact Resistance:
Initial:
Center Contact: 3.0 Milliohm max.
Outer Contact: 2.0 Milliohm max.
After Environmental:
Center Contact: 4.0 Milliohm max.
Outer Contact: NA.

MECHANICAL(S):

Mating Characteristics:
Interface per Mil–Std–348.
Force To Engage & Disengage:
Torque: 2 inch–pounds max.
Longitudinal Force: NA.
Center Contact Retention:
Axial Force: 5 pounds min.
Connector Durability:
500 cycles min @ 12 cycles/minute max.
Permeability: Less than 2.0 mu.

ENVIRONMENTAL(S):

Temperature Range: –65°C to +165°C.
Thermal Shock:
Mil–Std–202, Method 107, Test Cond. A.
Moisture Resistance:
Mil–Std–202, Method 106, Insulation resistance at least 200 megohms within 5 minutes after removal from humidity.
Corrosion:
Mil–Std–202, Method 101, Test Cond. B.
Vibration:
Mil–Std–202, Method 204, Test Cond. D.
Shock:
Mil–Std–202, Method 213, Test Cond. I.

FINISH(ES):

Body:
Passivate per SAE AMS–2700.
Center Conductor:
Gold plate per ASTM B–488, over nickel under plate per AMS–QQ–N–290.

APPLICABLE CARLISLE IT DOCUMENTS

WORK STD	PROD INST	ASSY INST
NA	NA	NA

NOTICE

THIS DRAWING EMBODIES A CONFIDENTIAL PROPRIETARY DESIGN ORIGINATED BY CARLISLE INTERCONNECT TECHNOLOGIES AND ALL DESIGN, MANUFACTURING, REPRODUCTION, USE AND SALE RIGHTS REGARDING THE SAME ARE EXPRESSLY RESERVED. IT IS SUBMITTED UNDER A CONFIDENTIAL RELATIONSHIP FOR A SPECIFIED PURPOSE AND THE RECIPIENT AGREES BY ACCEPTING THIS DRAWING NOT TO SUPPLY OR DISCLOSE ANY INFORMATION REGARDING IT TO ANY UNAUTHORIZED PERSON TO INCORPORATE INOTHER PROJECTS ANY SPECIAL FEATURE PECULIAR TO THIS DESIGN. ALL PATENT RIGHTS HERETO ARE EXPRESSLY RESERVED BY CARLISLE INTERCONNECT TECHNOLOGIES, CERRITOS, CA 90703

TOLERANCES AND NOTES
EXCEPT AS NOTED

DIMENSIONS ARE IN INCHES.
LINEAR .XX ±.015 .XXX ±.005 ANGULAR ± 1/2°
FRACTION ± 1/32

1. MACHINE FINISH: 63 RMS
2. BREAK ALL SHARP EDGES .003 MAX.
3. MACHINED FILLETS .005 MAX.
4. MACHINED SURFACES SQUARE TO RESPECTIVE AXIS WITHIN .005 INCHES PER INCH.
5. MACHINED DIAMETERS CONCENTRIC WITHIN .002 T.I.R.
6. DIMENSIONS TO BE MET BEFORE PLATING.
7. CHAMFER ALL THREADS 45°.
8. THREADS PER H–28
9. REMOVE FRAYED EDGES ON TEFLON.
10. REMOVE ALL BURRS.

MATERIAL		
–		
APPROVAL	INITIALS	DATE
DRAWN BY	DKN	01.04.12
CHECKED BY		
TEST ENGG		
QUALITY		
DESIGN ENGG	HT	03.13.12
MFG ENGG	PC	03.13.12
ECO APPRV		

SPECIFICATION	PROCUREMENT
–	–

CARLISLE Interconnect Technologies
Cerritos, CA 90703

TITLE: SSMA FEMALE THREAD–IN STRAIGHT(.375 LONG) TO ACCEPT Ø .015 PIN

SCALE	DIRECTORY\SUB–DIRECTORY	SHEET
10:1	OL_\	1 OF 1

SIZE	CAGE CODE	DRAWING NO.	REV.
C	30990	3050–3CCSF	–

ENG–DWG REV. F