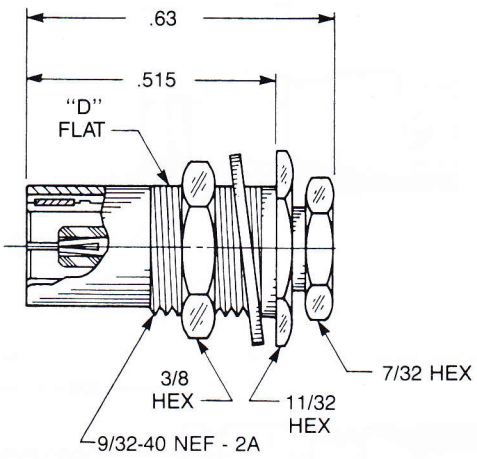

Bulkhead Mounted Straight Female Cable Plug

Clamp type for flexible cable:
3028-1551-0XX (Gold plated)
3028-7551-0XX (Nickel plated)

Solder-clamp for semi-rigid cable:
3028-1541-0XX (Gold plated)
3028-7541-0XX (Nickel plated)

See page 92 for float-mount version

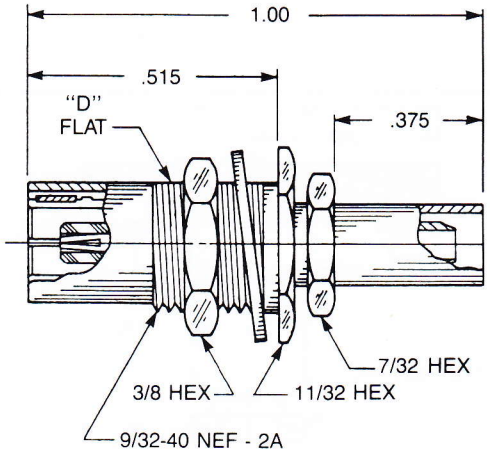

Bulkhead Mounted Straight Female Cable Plug

Crimp type for flexible cable:
3028-1571-0XX (Gold plated)
3028-7571-0XX (Nickel plated)

See page 92 for float-mount version

Substitute the appropriate cable group for 'XX':			
02	RG178, RG196, M17/93, M17/169	09	.141" semi-rigid, RG402, M17/130
03	RG174, RG179, RG316, M17/113, M17/119, M17/172, M17/173	10	.085" semi-rigid, RG405, M17/133
05	RG178DS, RG196DS	19	RG174DS, RG316DS, M17/152, Times RD316

Designed for use with .093″ max thick panel

e-mail: aepsales@aepconnectors.com

AEP New Haven, CT
203/776-2813