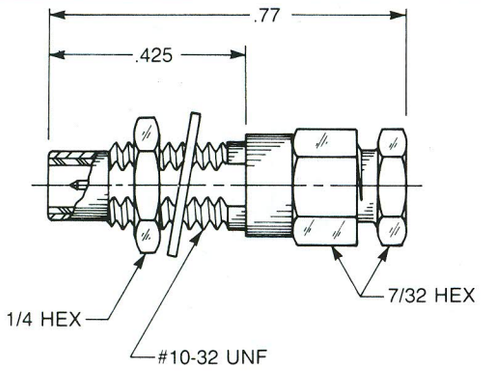

Straight Male Bulkhead Cable Jack

Clamp type for flexible cable:
1003-1551-0XX (Gold plated)
1003-7551-0XX (Nickel plated)

Solder-clamp for semi-rigid cable:
1003-1541-0XX (Gold plated)
1003-7541-0XX (Nickel plated)

QPL version available (M39012/76)

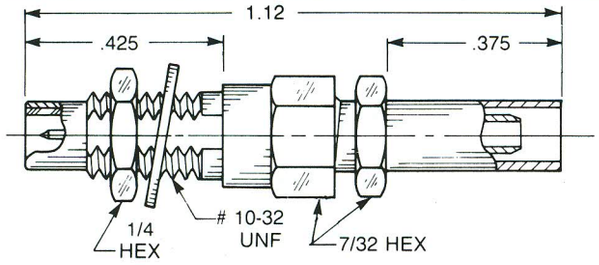

Straight Male Bulkhead Cable Jack

Crimp type for flexible cable:
1003-1571-0XX (Gold plated)
1003-7571-0XX (Nickel plated)

QPL version available (M39012/76)

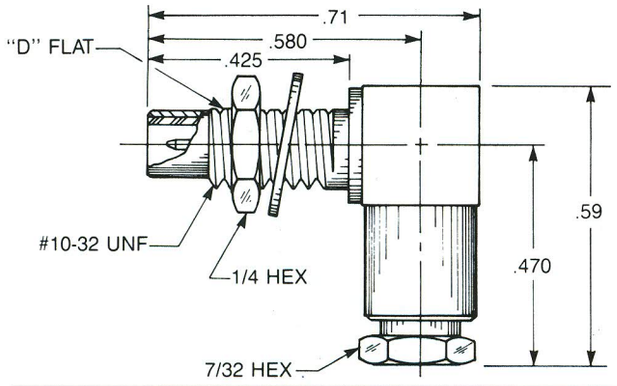

Bulkhead Mounted Right Angle Male Cable Jack

Clamp type for flexible cable:
1006-1551-0XX (Gold plated)
1006-7551-0XX (Nickel plated)

Solder-clamp for semi-rigid cable:
1006-1541-0XX (Gold plated)
1006-7541-0XX (Nickel plated)

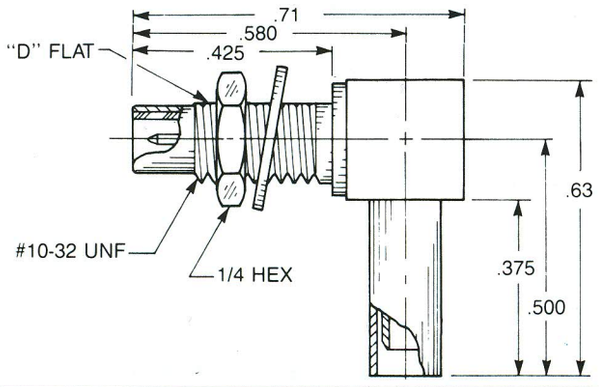

Bulkhead Mounted Right Angle Male Cable Jack

Crimp type for flexible cable:
1106-1521-0XX (Gold plated)
1106-7521-0XX (Nickel plated)

Substitute the appropriate cable group for 'XX':			
02	RG178, RG196, M17/93, M17/169	09	.141" semi-rigid, RG402, M17/130
03	RG174, RG179, RG316, M17/113, M17/119, M17/172, M17/173	10	.085" semi-rigid, RG405, M17/133
05	RG178DS, RG196DS	19	RG174DS, RG316DS, M17/152, Times RD316

Designed for use with .093" max thick panel
See page 143 for D flat location in relation to hex.

AEP New Haven, CT
203/776-2813

