1.0 PERFORMANCE
1.1 FREQUENCY RANGE: DC–11GHz
1.2 VOLTAGE RATING: 1000V RMS (sea level)
1.3 NOMINAL IMPEDANCE: 50 OHMS
1.4 DWV: 2500 V RMS @ 60 Hz (sea level)
1.5 TEMPERATURE RANGE: –65°C TO +165°C
2.0 MATERIALS:
2.1 DIELECTRIC: PTFE, ASTM–D–1710
2.2 CENTER CONTACT: BRASS PER ASTM–B–16
2.3 LOCKING RING: PHOSPHOR BRONZE, ASTM–B–159, ALLOY 510
2.4 OTHER METAL PARTS: BRASS, ASTM–B–16
2.5 GASKET: SILICONE RUBBER, ZZ–R–765, GR. 50, RED
3.0 FINISHES: SEE CHART
4.0 MECHANICAL:
4.1 INTERFACES IN ACCORDANCE WITH MIL–STD–348
4.2 SOLDER CUP ORIENTATION BY SPECIAL ORDER ONLY.

DWG NO.	REV.
OL–0406–31–1	D

PART NO.	BODY PLATING	CONTACT PLATING
0406–31	NICKEL	SILVER
0406–31 NI/GOLD	NICKEL	GOLD
0406–31–SI	SILVER	SILVER
0406–31–SI/GOLD	SILVER	GOLD
0406–31–AG	ALBALOY	GOLD
0406–31–BW	ALBALOY/Ag	THICK GOLD

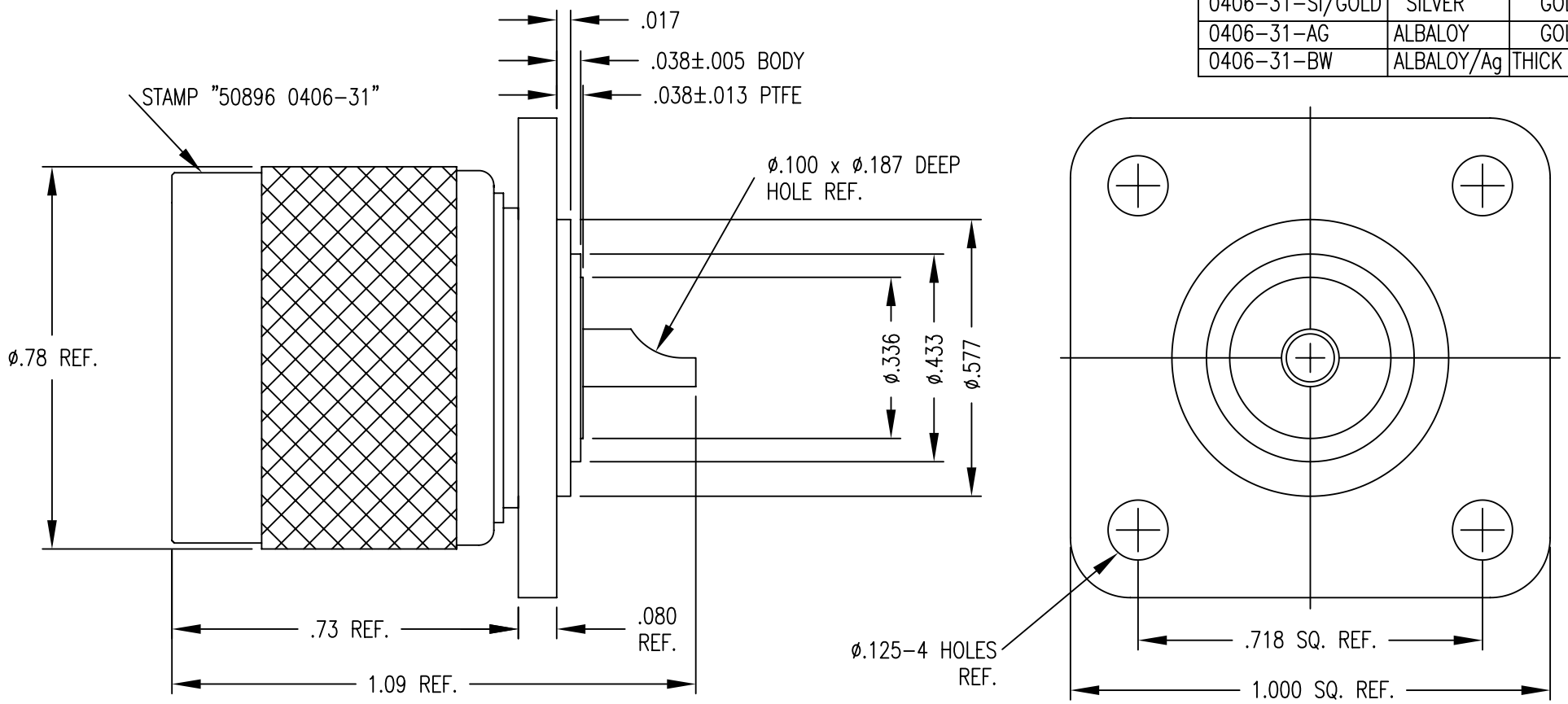

Rev.	Revisions	Date	Dwn.	Appd.
D	ADD DIMENSIONS	5/22/08	FSH	FSH
C	ADD NOTE 4.2	10/3/06	FSH	FSH
B	CORRECT PLATING CODE TABLE TYPO'S.	3/14/06	DVP	FSH
A	ORIGINAL	12/3/00		

RECOM. STOCK SIZE | FT/M PCS | QTY REQD

PROPRIETARY
THIS DRAWING CONTAINS CONFIDENTIAL INFORMATION PROPRIETARY TO SAN*TRON INC. IT MUST NOT BE REPRODUCED OR DISCLOSED TO OTHERS OR USED IN ANY OTHER WAY, IN WHOLE OR PART EXCEPT AS AUTHORIZED IN WRITING BY SAN*TRON INCORPORATED.

REMOVE ALL BURRS AND SHARP EDGES .005 MAX.
UNLESS OTHERWISE STATED ALL DIMENSIONS ARE IN INCHES AND APPLY AFTER PLATING

UNSPECIFIED TOL.
DEC. ± .005
FRAC. ± 1/64
ANG. ± 1/2°

DWN	JMB	5/16/00
CHKD	SJS	11/27/00
APPR		

CONCENTRICITY .004 TIR
ALL MACHINED SURFACES 63

SAN • TRON, INC.
4 NEWBURYPORT TPK, IPSWICH, MA 01938

TITLE N MALE PANEL RECEPTACLE STRAIGHT

MATERIAL: SEE NOTE 2.0
FINISH: SEE CHART

FSCM NO. 50896
SCALE X:X

DWG NO. OL–0406–31–1
REV. D