1.0 PERFORMANCE
1.1 FREQUENCY RANGE: DC–11GHz
1.2 VOLTAGE RATING: 500V RMS (sea level)
1.3 NOMINAL IMPEDANCE: 50 OHMS
1.4 DWV: 1500 V RMS @ 60 Hz (sea level)
1.5 TEMPERATURE RANGE: –65° C TO +165° C

2.0 MATERIALS
2.1 DIELECTRIC: PTFE, ASTM–D–1710
2.2 CONTACT: BERYLLIUM COPPER, ASTM–B–196
2.3 LOCKWASHER: PHOSPHOR BRONZE
2.4 OTHER METAL PARTS: BRASS, ASTM–B–16
2.5 GASKETS: SILICON RUBBER ZZ–R–765, GR 50 RED
3.0 FINISHES: SEE TABLE
4.0 MECHANICAL
4.1 INTERFACE IN ACCORDANCE WITH MIL–STD–348

DWG NO.		REV.
OL–0505–01–1		A
PART NUMBER	BODY	CONTACT
0505–01	NICKEL	SILVER

PLATING PER SAN–TRON SPEC. 7.3.1–8

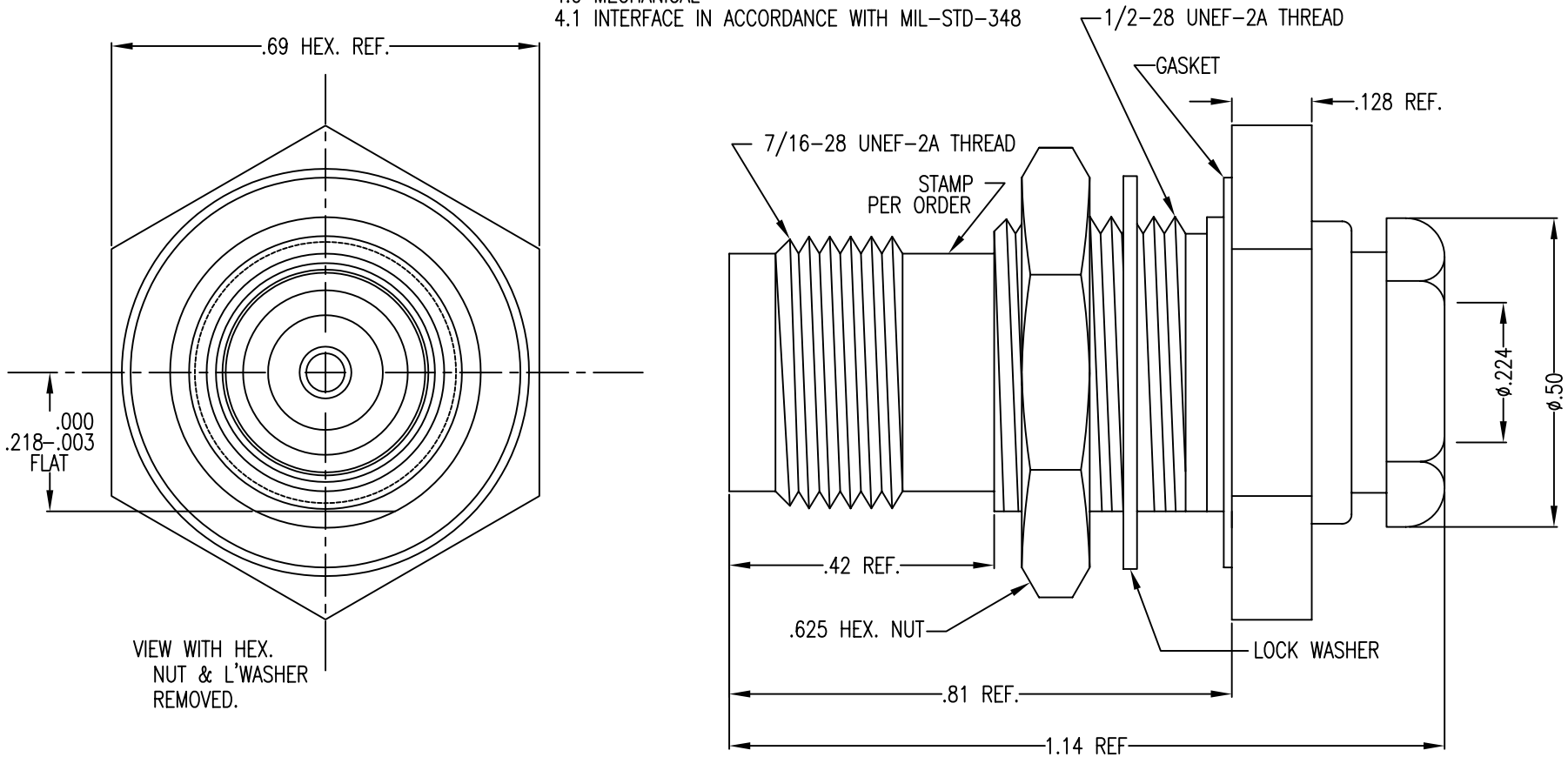

DO NOT SCALE DRAWING

Rev.	Revisions	ECN No.	Disp.	Date	Dwn.	Appd.
A	ORIGINAL		NEW	1/26/05		

Ref.: SK–

REMOVE ALL BURRS AND SHARP EDGES .005 MAX.

INTERPRET PER ASME Y14.5M–1994

THIS DRAWING CONTAINS CONFIDENTIAL INFORMATION PROPRIETARY TO SAN–TRON, INC. IT MUST NOT BE REPRODUCED OR DISCLOSED TO OTHERS OR USED IN ANY OTHER WAY, IN WHOLE OR PART EXCEPT AS AUTHORIZED IN WRITING BY SAN–TRON, INC.

UNLESS OTHERWISE SPECIFIED:
ALL DIMENSIONS ARE IN INCHES.
ALL DIMENSIONS ARE AFTER PLATING.
.XXX= ±.005 ALL MACHINED SURFACES 32 MAX.
.XX= ±.01 ANG.±1/2° FRACTIONAL= ±1/64
⌖ .004 MAX. TIR. | ⊥ AXIS .001

THIRD ANGLE PROJECTION

DWN	DVP	7/30/07
CHKD	SJS	/
APPR	FSH	/

SAN-TRON, INC.
4 NEWBURYPORT TPK. IPSWICH MA USA 01938
TEL: 978 - 356 -1585 FAX: 978 - 356 -1573
WWW. santron.com E MAIL: santron@santron.com

TITLE TNC BULKHEAD JACK FOR RG–55, 58 & 223/U CABLE

MATERIAL: SEE NOTE 2.0

FINISH: SEE NOTE 3.0

CAGE CODE: 50896

SCALE X:X

DWG NO. OL–0505–01–1 REV. A