Straight Male Bulkhead Jack Receptacle

- Solder pot contact
- Rear mount

3004-1511-000 (Gold plated)
3004-7511-000 (Nickel plated)

See page 95 for float-mount version

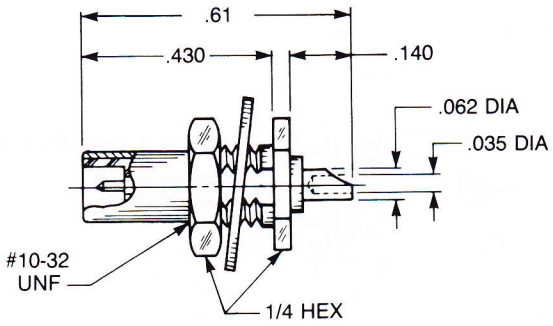

Straight Male Bulkhead Jack Receptacle

- Solder pot contact
- Front mount

3019-1511-000 (Gold plated)
3019-7511-000 (Nickel plated)

See page 95 for float-mount version

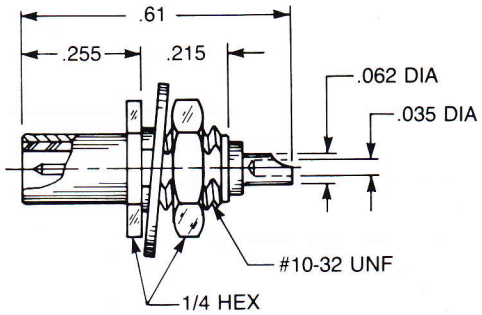

Straight Male Bulkhead Jack Receptacle

- Solder pot contact
- Recessed front mount

3014-1511-000 (Gold plated)
3014-7511-000 (Nickel plated)

See page 95 for float-mount version

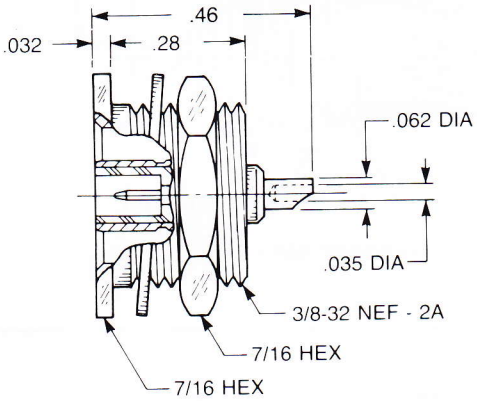

Right Angle Male Bulkhead Jack Receptacle

- Solder pot contact
- Front mount

3012-1511-000 (Gold plated)
3012-7511-000 (Nickel plated)

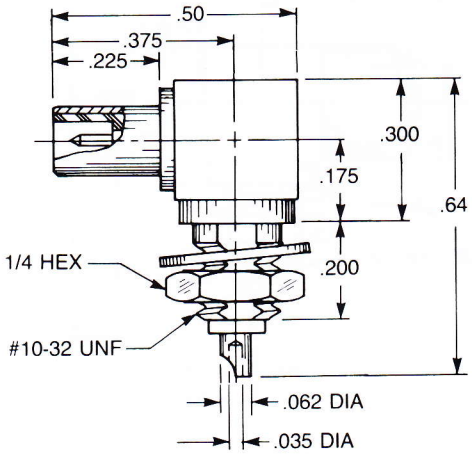

Designed for use with .093" max thick panel
See page 143 for D flat location in relation to hex.