DWG NO.	REV.
OL-0505-02-1	B

PART NUMBER	BODY	CONTACT
0505-02	NICKEL	SILVER
0505-02 Ni/GOLD	NICKEL	GOLD

1.0 PERFORMANCE (SEA LEVEL)
1.1 FREQUENCY RANGE: DC-6 GHz
1.2 VOLTAGE RATING: 500 Vrms
1.3 NOMINAL IMPEDANCE: 50 OHMS
1.4 DWV: 1500 Vrms, 60 Hz
1.5 TEMPERATURE RANGE: -65/+165°C

2.0 MATERIALS: RoHS COMPLIANT
2.1 DIELECTRIC: PTFE
2.2 CONTACT: BeCu
2.3 LOCK WASHER: PHOSPHOR BRONZE
2.4 OTHER METAL PARTS: BRASS
2.5 GASKET: Si RUBBER
3.0 FINISHES: SEE TABLE
4.0 MECHANICAL
4.1 INTERFACE PER MIL-STD-348
4.2 ASSEMBLY INSTRUCTIONS PER B-03
4.3 CONNECTOR ADDS TO CABLE
.09 TO REF PLANE & .42 TO END

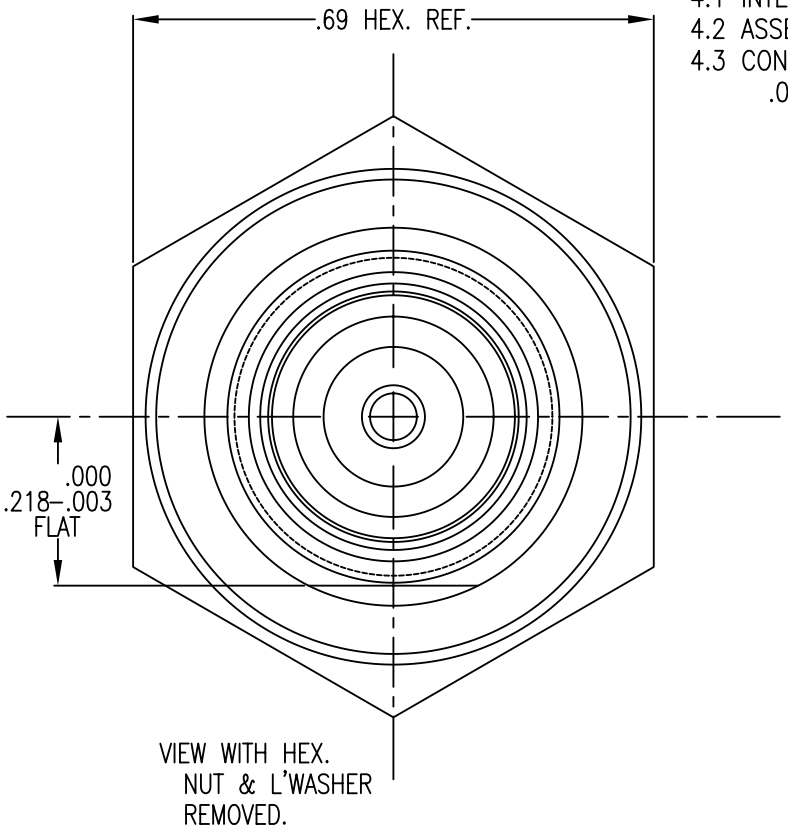

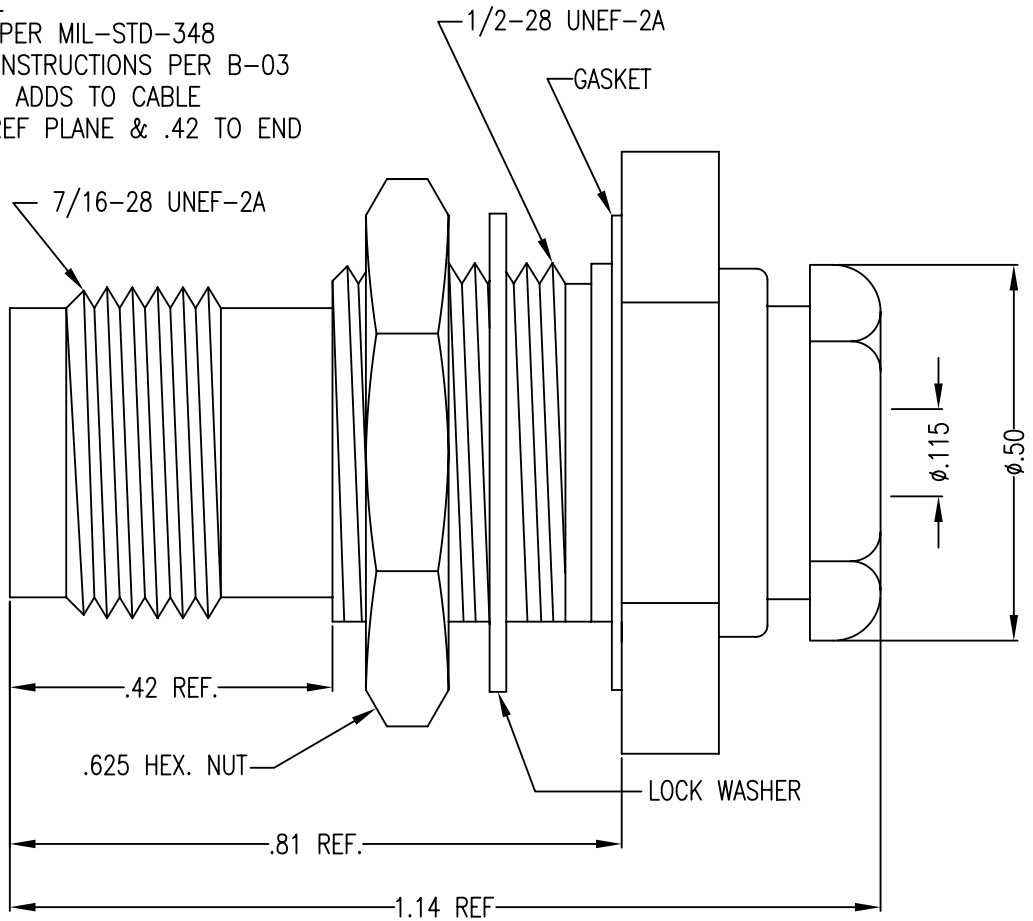

DO NOT SCALE DRAWING

Rev.	Revisions		Disp.	Date	Dwn.	Appd.
B	ADD NOTE 4.2 & 4.3		MIX	11/14/08	FSH	FSH
A	ORIGINAL		NEW	1/26/05		

Ref.: SK-

REMOVE ALL BURRS AND SHARP EDGES .005 MAX.

INTERPRET PER ASME Y14.5M-1994

THIS DRAWING CONTAINS CONFIDENTIAL INFORMATION PROPRIETARY TO SAN-TRON, INC. IT MUST NOT BE REPRODUCED OR DISCLOSED TO OTHERS OR USED IN ANY OTHER WAY, IN WHOLE OR PART EXCEPT AS AUTHORIZED IN WRITING BY SAN-TRON, INC.

UNLESS OTHERWISE SPECIFIED:
ALL DIMENSIONS ARE IN INCHES.
ALL DIMENSIONS ARE AFTER PLATING.
.XXX= ±.005 ALL MACHINED SURFACES 32 MAX.
.XX= ±.01 ANG.±1/2° FRACTIONAL= ±1/64
◎ .004 MAX. TIR. | ⊥ AXIS .001

THIRD ANGLE PROJECTION

DWN	RF	1/26/05
CHKD	SJS	1/26/05
APPR	FSH	1/26/05

SAN-TRON, INC.
4 NEWBURYPORT TPK. IPSWICH MA USA 01938
TEL: 978 - 356 -1585 FAX: 978 - 356 -1573
WWW. santron.com E MAIL: santron@santron.com

TITLE TNC BULKHEAD JACK FOR RG-174A, 188 & 316/U CABLES

MATERIAL: SEE NOTE 2.0

FINISH: SEE NOTE 3.0

CAGE CODE: 50896

SCALE X:X

DWG NO. OL-0505-02-1 REV. B