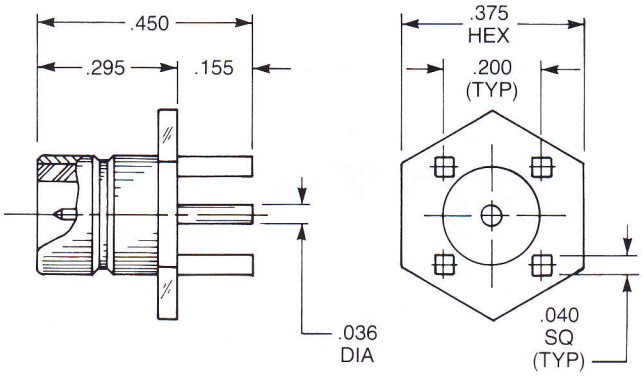

Straight Male Jack P.C. Board Receptacle

2709-1511-001 (Gold plated)
2709-7511-001 (Nickel plated)

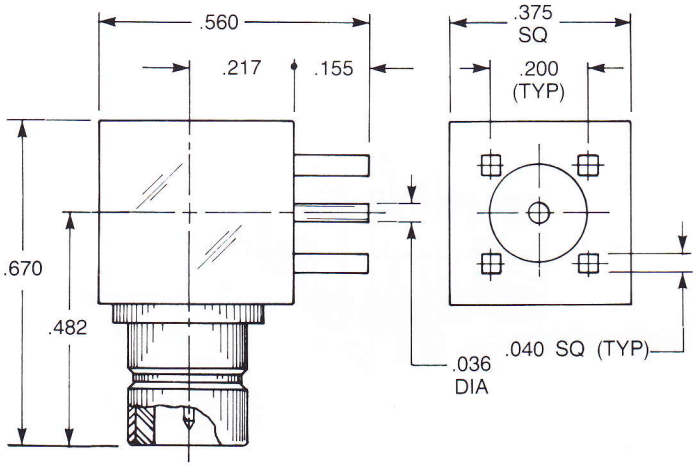

Right Angle Male Jack P.C. Board Receptacle

2710-1511-000 (Gold plated)
2710-7511-000 (Nickel plated)

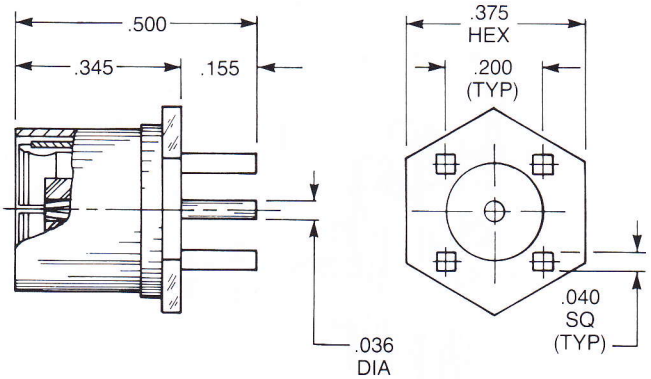

Straight Female Plug P.C. Board Receptacle

2725-1511-000 (Gold plated)
2725-7511-000 (Nickel plated)

e-mail: aepsales@aepconnectors.com
AEP New Haven, CT
203/776-2813