DWG NO.	REV.
0401-137-1	B

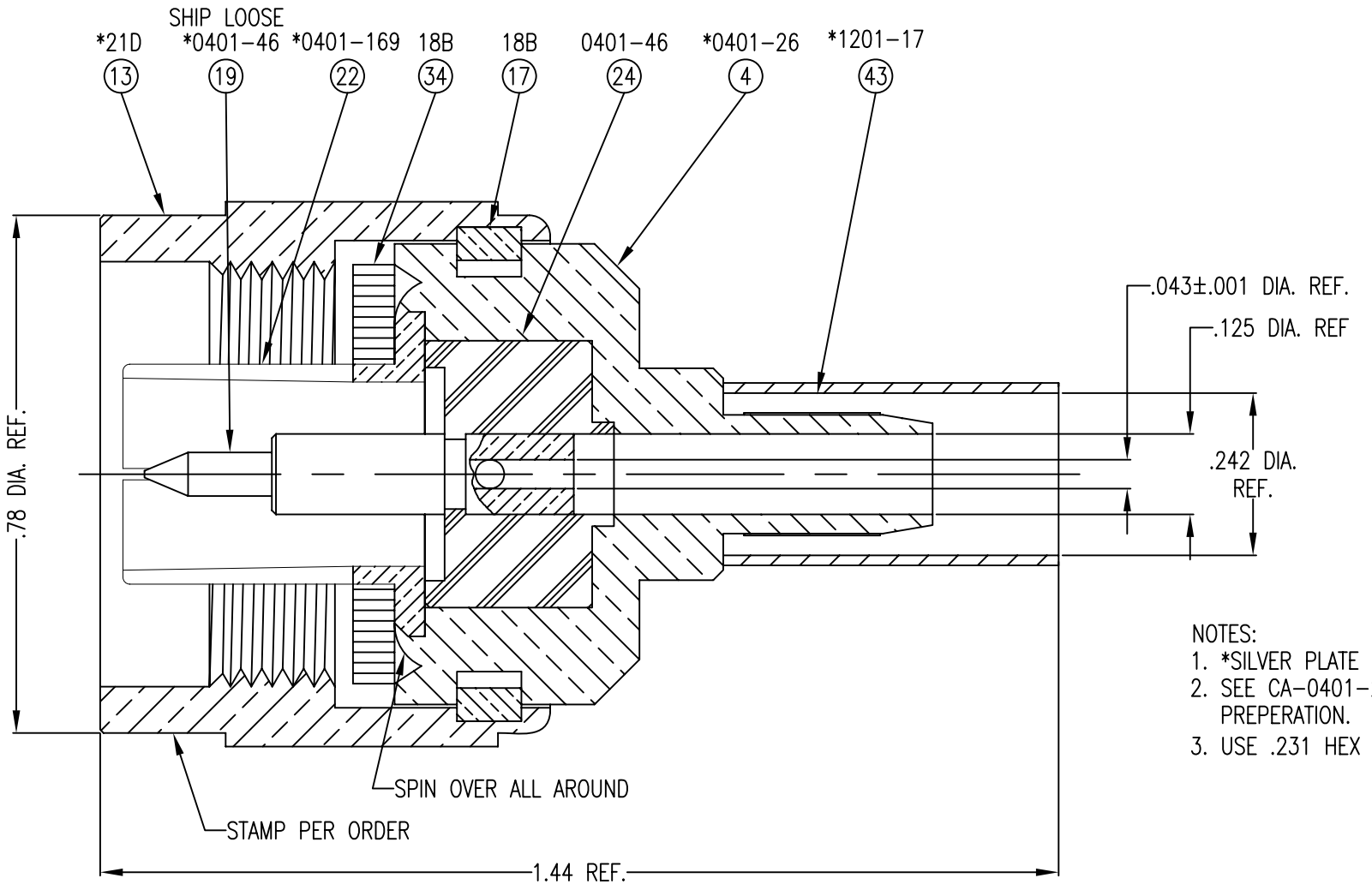

NOTES:
1. *SILVER PLATE .0002 MIN. THICK.
2. SEE CA-0401-26 FOR CABLE PREPERATION.
3. USE .231 HEX DIE

Rev.	Revisions	Date	Dwn.	Appd.
B	CRIMP FERRULE FROM 0401-26-43 TO 1201-17-43, OUTER CONTACT FROM 21D-22 TO 0401-169-22	1/9/09	JTH	FSH
A	ORIGINAL	6/24/98		

RECOM. STOCK SIZE	FT/M PCS	QTY REQD

PROPRIETARY
THIS DRAWING CONTAINS CONFIDENTIAL INFORMATION PROPRIETARY TO SAN*TRON INC. IT MUST NOT BE REPRODUCED OR DISCLOSED TO OTHERS OR USED IN ANY OTHER WAY, IN WHOLE OR PART EXCEPT AS AUTHORIZED IN WRITING BY SAN*TRON INCORPORATED.

REMOVE ALL BURRS AND SHARP EDGES .005 MAX.
UNLESS OTHERWISE STATED
ALL DIMENSIONS ARE IN INCHES
AND APPLY AFTER PLATING

UNSPECIFIED TOL.			
DEC. ± .005	DWN	MM	6/24/98
FRAC. ± 1/64	CHKD	SJS	6/26/98
ANG. ± 1/2°	APPR		

CONCENTRICITY .004 TIR
ALL MACHINED SURFACES 63

SAN • TRON, INC.
4 NEWBURYPORT TPK, IPSWICH, MA 01938

TITLE N CRIMP PLUG FOR RG-142/U CABLE (CAPTIVE CONTACT)

MATERIAL:

FINISH: SILVER, CONTACT-SILVER

FSCM NO. 50896	DWG NO. 0401-137-1	REV. B
SCALE 4:1		