1.0 PERFORMANCE
1.1 FREQUENCY RANGE: DC–11GHz
1.2 VOLTAGE RATING: 500V RMS (sea level)
1.3 NOMINAL IMPEDANCE: 50 OHMS
1.4 DWV: 1500 V RMS @ 60 Hz (sea level)
1.5 TEMPERATURE RANGE: –65°C TO +165°C
2.0 MATERIALS:
2.1 DIELECTRICS: TEFLON, ASTM–D–1710
2.2 CONTACT: BRASS PER ASTM–B–16
2.3 LOCKING RING: PHOSPHOR BRONZE, ASTM–B–159, ALLOY 510
2.4 OTHER METAL PARTS: BRASS PER ASTM–B–16
2.5 GASKET: SILICON RUBBER, ZZ–R–765, GR.50, RED
3.0 FINISHES – SEE TABLE
4.0 MECHANICAL:
4.1 INTERFACES IN ACCORDANCE WITH MIL–STD–348

DWG NO.	REV.
OL–0401–24*–1	B

* STI PART NO.	BODY PLATING	CONTACT PLATING	COUPLING NUT
0401–24	GOLD FUSION	GOLD	NICKEL
0401–24 SI	SILVER	GOLD	SILVER

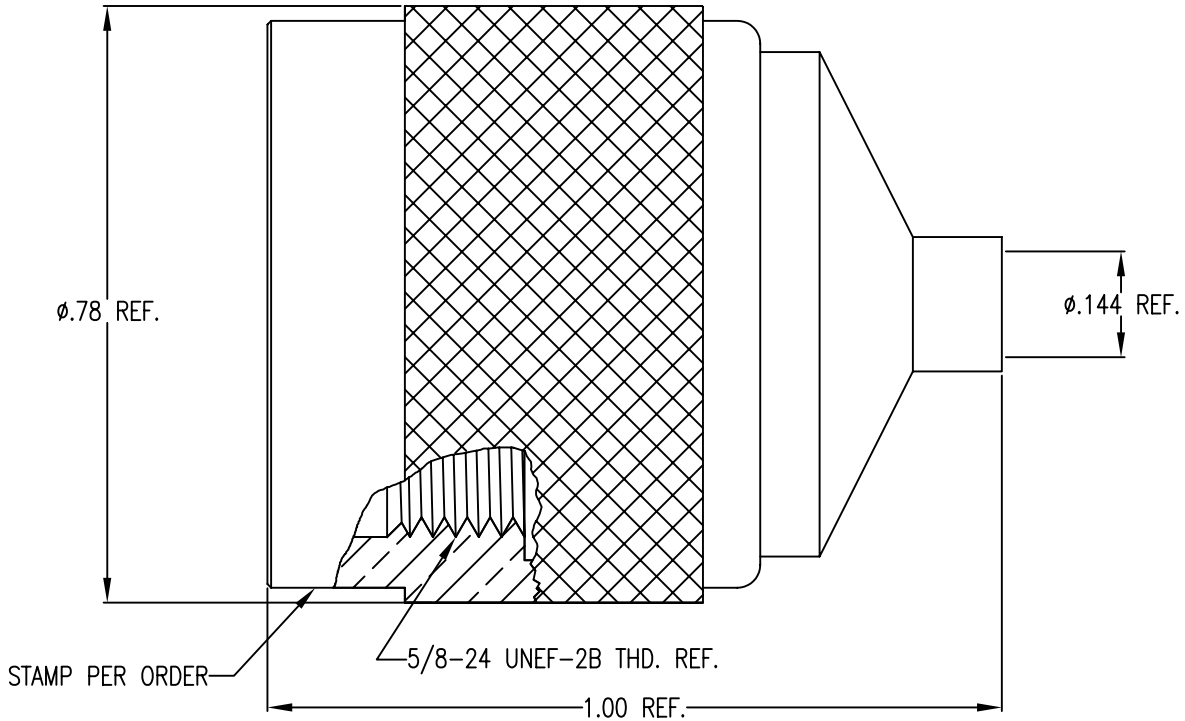

Rev.	Revisions	Date	Dwn.	Appd.
B 1	UPDATE PLATING TABLE PER SHOPMATE 0401–24 SI CONTACT & C'NUT PLATE	4/4/05	RF	FSH
B	GOLD FUSION WAS GOLD; CHD. NOTE 3.0; DEL. NOTES 3.1–3.3; ADD PLATING TABLE	8/3/04	RF	FSH
A	ORIGINAL	5/8/00		

RECOM. STOCK SIZE	FT/M PCS	QTY REQD

PROPRIETARY
THIS DRAWING CONTAINS CONFIDENTIAL INFORMATION PROPRIETARY TO SAN*TRON INC. IT MUST NOT BE REPRODUCED OR DISCLOSED TO OTHERS OR USED IN ANY OTHER WAY, IN WHOLE OR PART EXCEPT AS AUTHORIZED IN WRITING BY SAN*TRON INCORPORATED.

REMOVE ALL BURRS AND SHARP EDGES .005 MAX.
UNLESS OTHERWISE STATED
ALL DIMENSIONS ARE IN INCHES
AND APPLY AFTER PLATING

UNSPECIFIED TOL.			
DEC. ± .005	DWN	JMB	5/8/00
FRAC. ± 1/64	CHKD	SJS	11/27/00
ANG. ± 1/2°	APPR		

CONCENTRICITY .004 TIR
ALL MACHINED SURFACES ✓63

SAN • TRON, INC.
4 NEWBURYPORT TPK, IPSWICH, MA 01938

TITLE TYPE N PLUG, STRAIGHT, DIRECT SOLDER, .141 DIA. SEMIRIGID CABLE

MATERIAL: SEE NOTE 2.0
FINISH: SEE CHART

FSCM NO. 50896
SCALE 4:1
DWG NO. OL–0401–24*–1
REV. B