DWG NO.	REV.
OL–0401–52–1	A

PART NUMBER	BODY	CONTACT
0401–52	SILVER	GOLD/Cu

PLATING PER STI 7.3.1–8

1.0 PERFORMANCE
1.1 FREQUENCY RANGE: DC–4 GHz
1.2 NOMINAL IMPEDANCE: 50 OHMS
1.3 DWV: 1500 VRMS @ 60 Hz
1.4 TEMPERATURE RANGE: –65°C TO +165°C

2.0 MATERIALS:
2.1 CONTACT: BRASS
2.2 LOCKING RING: PHOSPHOR BRONZE
2.3 CRIMP FERRULE: COPPER
2.4 OTHER METAL PARTS: BRASS
2.5 INSULATORS: PTFE
2.6 GASKET: SILICONE RUBBER

3.0 FINISHES: SEE TABLE

4.0 MECHANICAL
4.1 INTERFACE PER MIL–STD–348
4.2 DURABILITY: 500 CYCLES
4.3 ASSEMBLY INTRUCTIONS PER STI D–04

DO NOT SCALE DRAWING

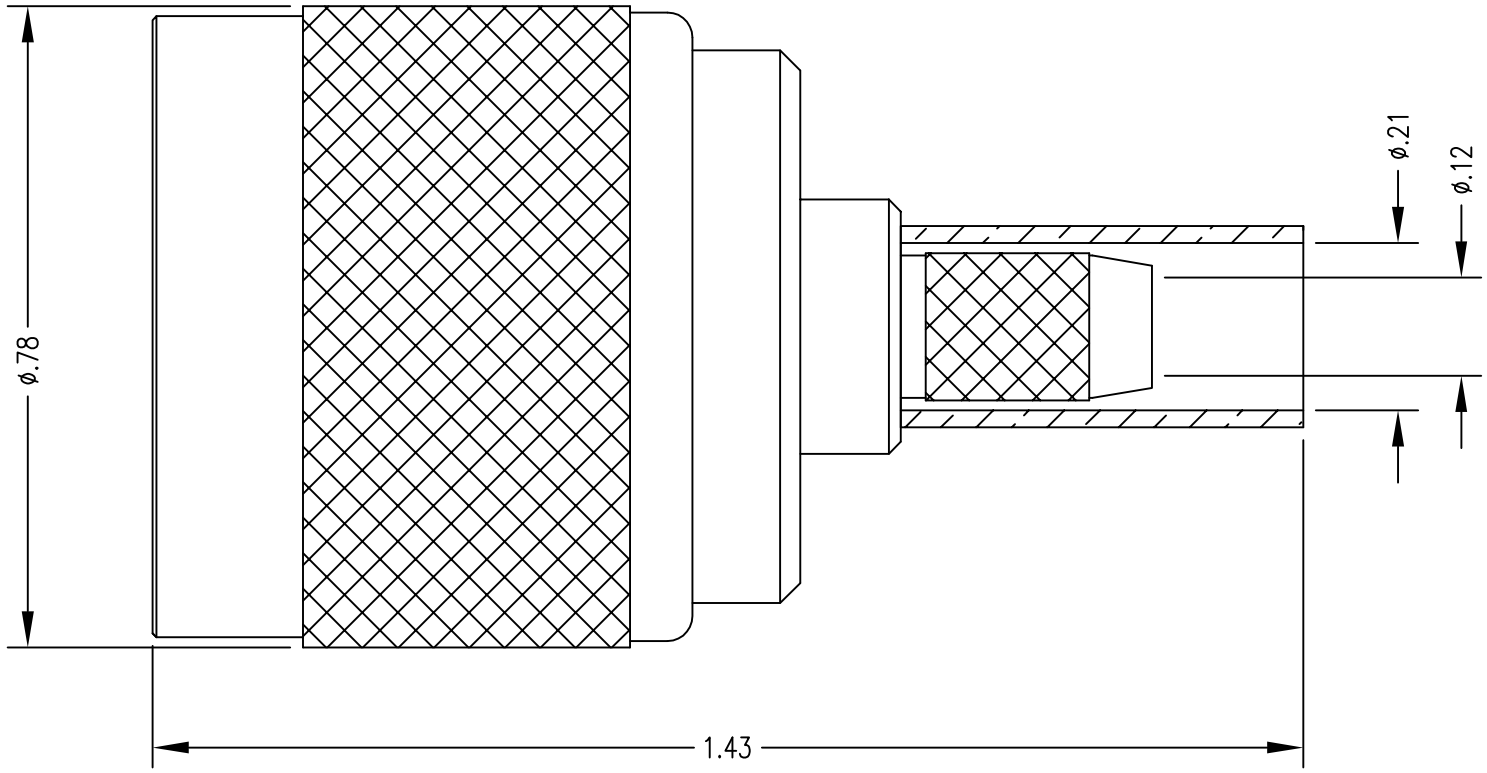

Rev.	Revisions		Disp.	Date	Dwn.	Appd.
A	ORIGINAL		NEW	5/29/12		

Ref.:

REMOVE ALL BURRS AND SHARP EDGES .005 MAX.

INTERPRET PER ASME Y14.5M–1994

THIS DRAWING CONTAINS CONFIDENTIAL INFORMATION PROPRIETARY TO SAN–TRON, INC. IT MUST NOT BE REPRODUCED OR DISCLOSED TO OTHERS OR USED IN ANY OTHER WAY, IN WHOLE OR PART EXCEPT AS AUTHORIZED IN WRITING BY SAN–TRON, INC.

UNLESS OTHERWISE SPECIFIED:
ALL DIMENSIONS ARE IN INCHES.
ALL DIMENSIONS ARE AFTER PLATING.
.XXX= ±.005 ALL MACHINED SURFACES 64 MAX.
.XX= ±.01 ANG.±1/2° FRACTIONAL= ±1/64
⌖ .004 MAX. TIR. | ⊥ AXIS .001

THIRD ANGLE PROJECTION

DWN	PRS	5/29/12
CHKD	FSH	5/29/12
APPR	FSH	5/29/12

SAN-TRON, INC.
4 NEWBURYPORT TPK. IPSWICH MA USA 01938
TEL: 978 - 356 -1585 FAX: 978 - 356 -1573
WWW. santron.com E MAIL: santron@santron.com

TITLE: N CRIMP PLUG FOR RG–58/U CABLE (CAPTIVE CONTACT)

MATERIAL: SEE NOTES
FINISH: SEE TABLE

CAGE CODE: 50896
SCALE X:X

DWG NO. OL–0401–52–1
REV. A