DWG NO.	REV.
OL-0401-66-1	A

1.0 PERFORMANCE
1.1 FREQUENCY RANGE: DC-11GHz
1.2 VOLTAGE RATING: 500V RMS (sea level)
1.3 NOMINAL IMPEDANCE: 50 OHMS
1.4 DWV: 1500 V RMS @ 60 Hz (sea level)
1.5 TEMPERATURE RANGE: -65°C TO +165°C
2.0 MATERIALS
2.1 DIELECTRIC: TEFLON, ASTM-D-1710
2.2 CRIMP FERRULE: SOFT COPPER, CDA 145
2.3 LOCKING RING: PHOSPHOR BRONZE, ASTM-B-159
2.4 ALL OTHER METAL PARTS: BRASS PER ASTM-B-16
2.5 GASKET: SILICON RUBBER, ZZ-R-765, GR. 50, RED
3.0 FINISHES
3.1 CENTER CONTACT: GOLD PLATED
3.2 ALL OTHER METAL PARTS: NICKEL PLATED
4.0 MECHANICAL
4.1 INTERFACE IN ACCORDANCE WITH MIL-STD-348

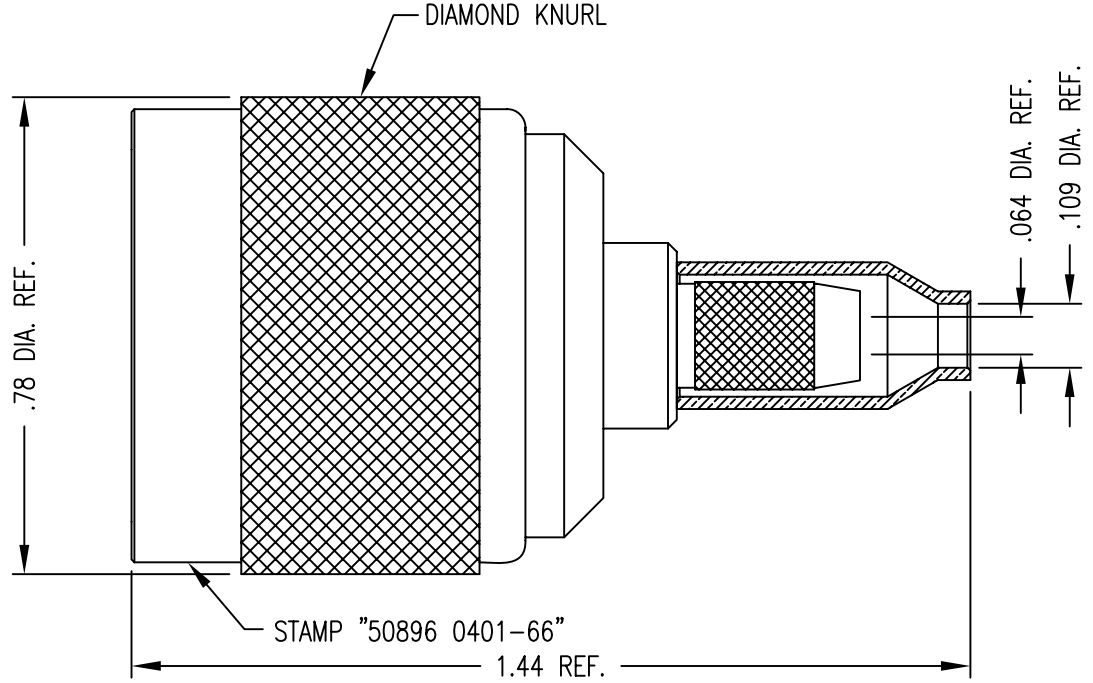

Rev.	Revisions	Date	Dwn.	Appd.
A	ORIGINAL	1/15/99		

RECOM. STOCK SIZE	FT/M PCS	QTY REQD

PROPRIETARY
THIS DRAWING CONTAINS CONFIDENTIAL INFORMATION PROPRIETARY TO SAN*TRON INC. IT MUST NOT BE REPRODUCED OR DISCLOSED TO OTHERS OR USED IN ANY OTHER WAY, IN WHOLE OR PART EXCEPT AS AUTHORIZED IN WRITING BY SAN*TRON INCORPORATED.

REMOVE ALL BURRS AND SHARP EDGES .005 MAX.
UNLESS OTHERWISE STATED ALL DIMENSIONS ARE IN INCHES AND APPLY AFTER PLATING

UNSPECIFIED TOL.			
DEC. ± .005 FRAC. ± 1/64 ANG. ± 1/2°	DWN	MM	1/15/99
	CHKD	SJS	1/15/99
	APPR		

CONCENTRICITY .004 TIR
ALL MACHINED SUFACES 63

SAN • TRON, INC.
4 NEWBURYPORT TPK, IPSWICH, MA 01938

TITLE N PLUG, STRAIGHT, CRIMP, CAPTIVE CONTACT FOR RG-316 D.S.

MATERIAL:	FINISH:
SEE NOTE 2.0	SEE NOTE 3.0

FSCM NO.	DWG NO.	REV.
50896	OL-0401-66-1	A

SCALE 3:1