| DWG NO. | REV. |
|---|---|
| OL-0406-153-1 | C |

| PLATING VARIATIONS | | |
|---|---|---|
| PART NUMBER | BODY | CONTACT |
| 0406-153 | SILVER | GOLD |
| COUPLING NUT IS NICKEL PLATED | | |

PLATING PER SAN-TRON SPEC. 7.3.1-8

1.0 PERFORMANCE
1.0.1 FREQUENCY RANGE: DC-11GHz
1.0.2 VOLTAGE RATING: 1000V RMS (sea level)
1.0.3 NOMINAL IMPEDANCE: 50 OHMS
1.0.4 DWV: 2500 V RMS @ 60 Hz (sea level)
1.0.5 TEMPERATURE RANGE: -65 C TO +165 C
2.0 MATERIALS
2.0.1 DIELECTRICS: TEFLON, ASTM-D-1710
2.0.2 CONTACTS: BRASS ASTM-B-16
2.0.3 LOCKING RING: PHOSPHOR BRONZE ASTM-B-159, ALLOY 510
2.0.4 OTHER METAL PARTS: BRASS, ASTM-B-16
2.0.6 GASKET: SILICON RUBBER ZZ-R-765, GR 50 RED
3.0. FINISHES:
3.0.1 CENTER CONTACTS: GOLD PLATED
3.0.2 COUPLING NUT NICKEL PLATED
3.0.3 ALL OTHER METAL PARTS: SILVER PLATED
4.0 MECHANICAL
4.0.1 INTERFACE IN ACCORDANCE WITH MIL-STD-348

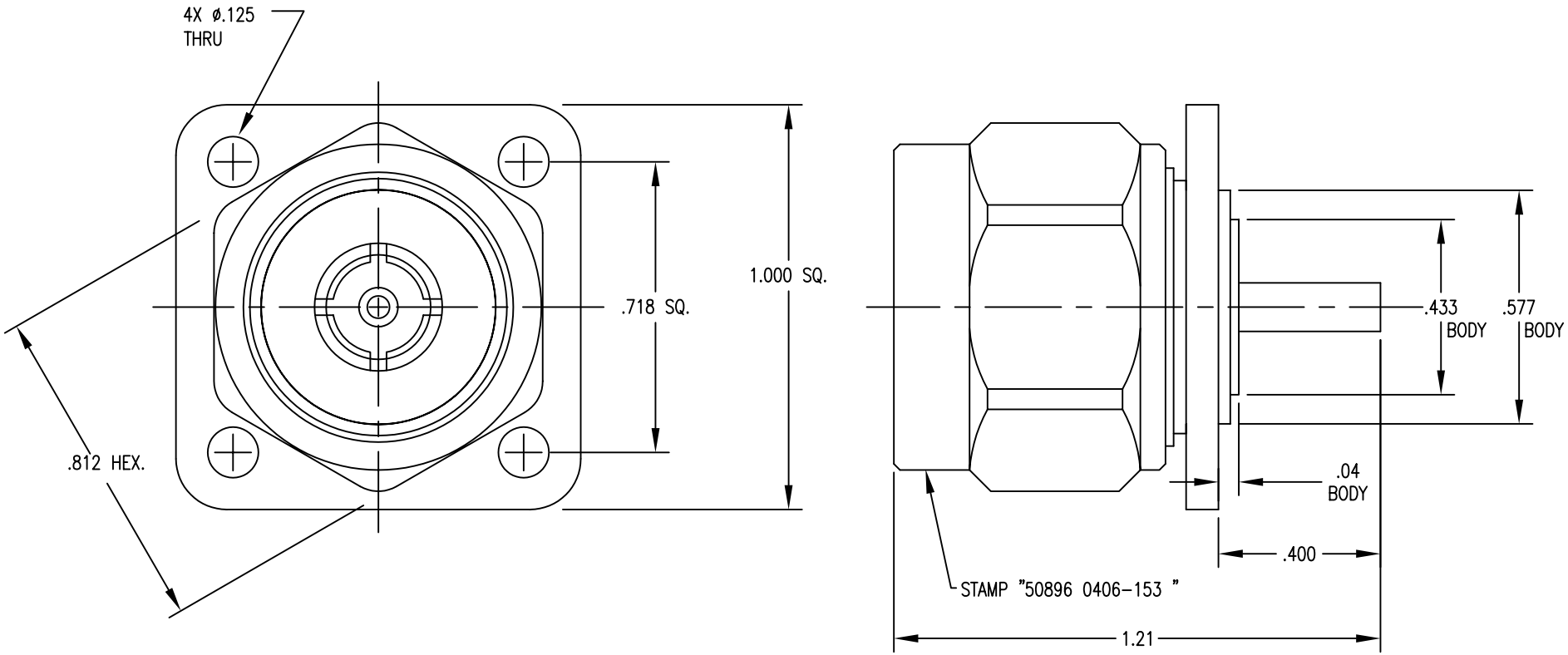


DO NOT SCALE DRAWING

| Rev. | Revisions | Disp. | Date | Dwn. | Appd. |
|---|---|---|---|---|---|
| C | REDRAWN ON NEW FORMAT, NO CHANGE | | 9/2/03 | LAP | FSH |
| A | ORIGINAL | NEW | 9/2/03 | | |

Ref.:

REMOVE ALL BURRS AND SHARP EDGES .005 MAX.

INTERPRET PER ASME Y14.5M-1994

THIS DRAWING CONTAINS CONFIDENTIAL INFORMATION PROPRIETARY TO SAN-TRON INC. IT MUST NOT BE REPRODUCED OR DISCLOSED TO OTHERS OR USED IN ANY OTHER WAY, IN WHOLE OR PART EXCEPT AS AUTHORIZED IN WRITING BY SAN-TRON INCORPORATED.

UNLESS OTHERWISE SPECIFIED:
ALL DIMENSIONS ARE IN INCHES.
ALL DIMENSIONS ARE AFTER PLATING.
.XXX= ±.005 ALL MACHINED SURFACES 63 MAX.
.XX= ±.01 ANG.±1/2° FRACTIONAL= ±1/64
◎ .004 MAX. TIR. | ⊥ AXIS .001

THIRD ANGLE PROJECTION

| | | |
|---|---|---|
| DWN | KC | 6/18/97 |
| CHKD | SJS | 6/18/97 |
| APPR | | |

SAN-TRON, INC.
4 NEWBURYPORT TPK. IPSWICH MA USA 01938
TEL: 978 - 356 -1585 FAX: 978 - 356 -1573
WWW. santron.com E MAIL: santron@santron.com

TITLE: N MALE PANEL RECEPTACLE 1.00 FLANGE

MATERIAL: SEE NOTE 2.0

FINISH: SEE NOTE 3.0

CAGE CODE: 50896

SCALE X:X

DWG NO. OL-0406-153-1

REV. C