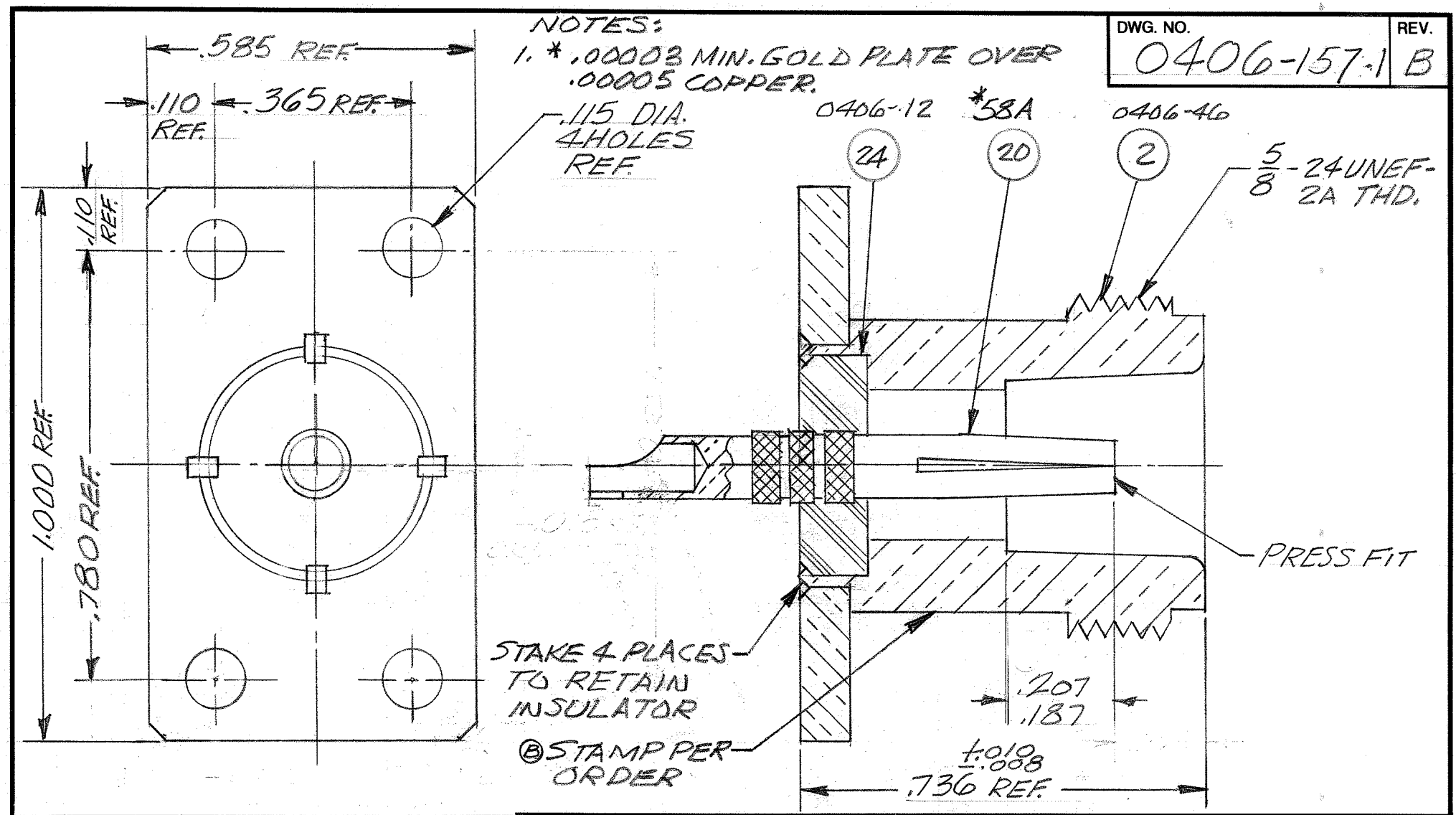

DWG. NO. 0406-157-1 REV. B

NOTES:
1. * .00003 MIN. GOLD PLATE OVER .00005 COPPER.

Rev.	Revisions	Date	Dwn.	Appd.
B	ADDED STAMP NOTE	3/15/96	SNS	TCG
A	ORIGINAL	12/4/96		

STOCK	FT/M PCS	QTY REQD

PROPRIETARY
THIS DRAWING CONTAINS CONFIDENTIAL INFORMATION PROPRIETARY TO SAN•TRON INC. IT MUST NOT BE REPRODUCED OR DISCLOSED TO OTHERS OR USED IN ANY OTHER WAY, IN WHOLE OR PART EXCEPT AS AUTHORIZED IN WRITING BY SAN•TRON INCORPORATED.

REMOVE ALL BURRS AND SHARP EDGES .005 MAX

UNLESS OTHERWISE STATED ALL DIMENSIONS ARE IN INCHES AND APPLY AFTER PLATING

UNSPECIFIED TOL.
DEC. ± .005
FRAC. ± 1/64
ANG. ± 1/2°

DWN	SNS	12/1/95
CHKD	SNS	12/1/95
APPR	TCG	2/5/96

CONCENTRICITY .004 TIR 63
ALL MACHINED SURFACES √

SAN • TRON, INC.
5 EUSTIS STREET, SAUGUS, MASS. 01906

TITLE SPECIAL N RECEPTACLE

MATERIAL

FINISH SILVER, CONTACT-GOLD

FSCM NO. 50896

SCALE 4X

DWG NO. 0406-157-1 REV. B

N41001