Straight Male Jack Receptacle

3009-1511-000 (Gold plated)
3009-7511-000 (Nickel plated)

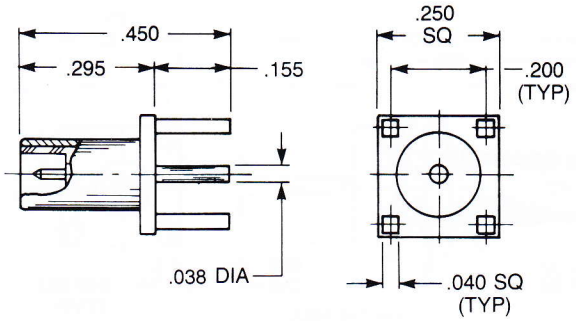

Right Angle Male Jack Receptacle

A	B	C	D
.43	.15	.50	.38

3010-1511-000	(Gold plated)
3010-7511-000	(Nickel plated)

A	B	C	D
.50	.215	.56	.437

3010-1511-003	(Gold plated)
3010-7511-003	(Nickel plated)

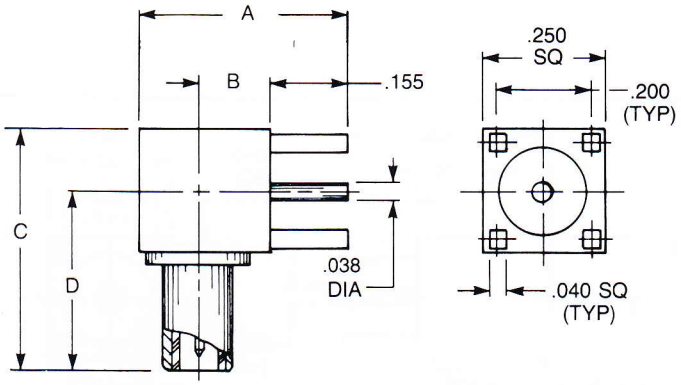

Straight Female Plug Receptacle

3025-1511-000 (Gold plated)
3025-7511-000 (Nickel plated)

See page 97 for blind-mate version

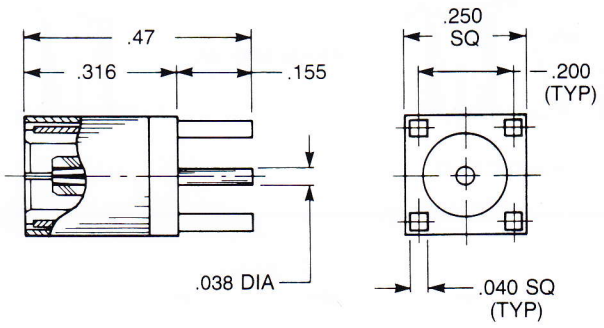

Right Angle Female Plug Receptacle

3042-1511-000 (Gold plated)
3042-7511-000 (Nickel plated)

See page 97 for blind-mate version

