This drawing and any data contained therein is the property of Gilbert Engineering Co., Inc., and constitution and contains proprietary and confidential information. Neither receipt nor possession of this drawing confers or transfers any right to duplicate, use, or disclose any information contained herein except as expressly authorized by Gilbert Engineering Co. Inc.

REV.	DESCRIPTION	DATE	APP'D.
A	SEE ECO GM-8084	4/2/98	

MATERIAL AND FINISH

HOUSING AND BUSHING:	CRES 303 PER ASTM A 484 AND ASTM A 582 OR ASTM A 555 AND ASTM A 581. PASSIVATE PER MIL-F-14072 E300.
CENTER CONTACT:	BERYLLIUM COPPER PER ASTM B 196 AND/OR ASTM B 197. GOLD PLATE PER MIL-G-45204; TYPE I, GRADE C, CLASS 1. OVER NICKEL PER QQ-N-290A; CLASS 1; 50 MICROINCHES MIN.
DIELECTRICS:	VIRGIN PTFE FLUOROCARBON PER ASTM D 1710 AND ASTM D 1457.

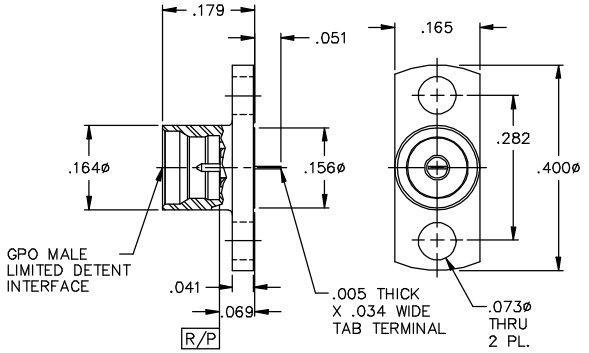

ALL DIMENSIONS ARE IN INCHES	CAT. NO. 0119-788-3	CODE IDENT NO. 82316

GILBERT ENGINEERING CO., INC.

BY	DATE	TITLE	
DRAWN: MJC	4/2/98		OUTLINE DRAWING FOR GPO MALE LIMITED DETENT 2 HOLE FLANGE MOUNT TAB TERMINAL
ASSEMBLY PROCEDURES: NONE			
SOURCE FILE: MECR# 490	SHT. 1 OF 1	DWG. NO.	OL-0119-788-3 REV A