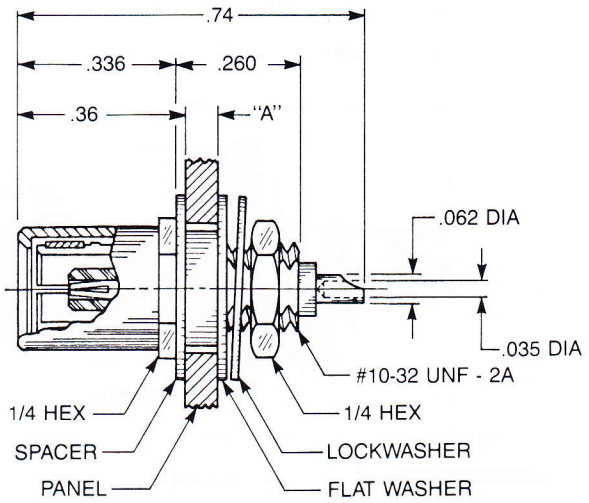

Float Mount
Straight Female
Bulkhead Plug Receptacle

- Solder pot contact
- Front mount
- Closed-entry mating end hood

Dim. A		
.031	3017-1511-500	(Gold plated)
	3017-7511-500	(Nickel plated)
.062	3017-1511-600	(Gold plated)
	3017-7511-600	(Nickel plated)
.093	3017-1511-700	(Gold plated)
	3017-7511-700	(Nickel plated)

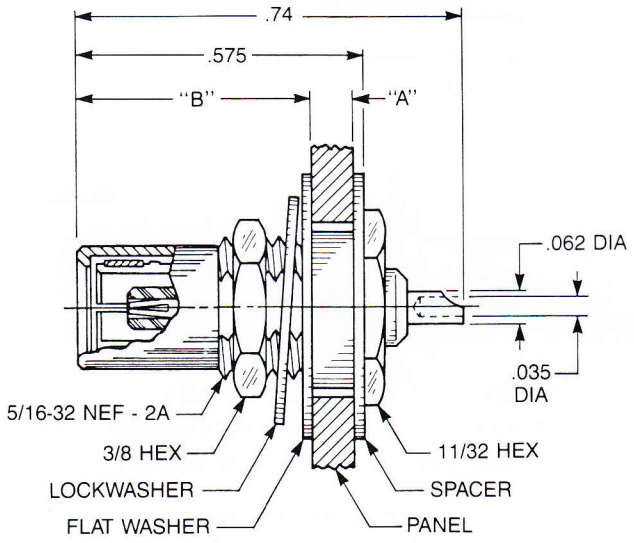

Float Mount
Straight Female
Bulkhead Plug Receptacle

- Solder pot contact
- Rear mount
- Closed-entry mating end hood

Dim. A	Dim. B		
.031	.515	3048-1511-500	(Gold plated)
		3048-7511-500	(Nickel plated)
.062	.484	3048-1511-600	(Gold plated)
		3048-7511-600	(Nickel plated)
.093	.453	3048-1511-700	(Gold plated)
		3048-7511-700	(Nickel plated)

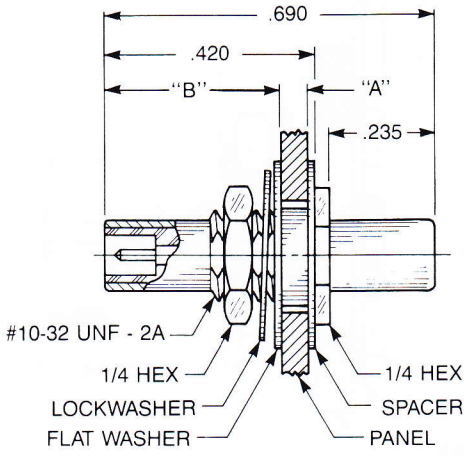

Float Mount
Straight Male
Jack To Jack Adapter

- Connects two plugs

Dim. A	Dim. B		
.031	.360	5252-1501-500	(Gold plated)
		5252-7501-500	(Nickel plated)
.062	.329	5252-1501-600	(Gold plated)
		5252-7501-600	(Nickel plated)
.093	.298	5252-1501-700	(Gold plated)
		5252-7501-700	(Nickel plated)

See page 91 for float mount details

e-mail: aepsales@aepconnectors.com

AEP New Haven, CT
203/776-2813