DATE REVISED: 10/10/01

CATALOG NUMBER
0119-821-3

MATERIAL AND FINISH

SHROUD: CRES 303; PASSIVATED

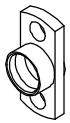

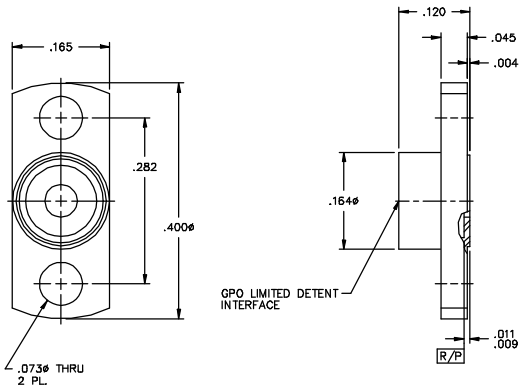

GPO LIMITED DETENT 2 HOLE FLANGE MOUNT SHROUD	IDENT CODE: 82316 REVISION: B	GILBERT ENGINEERING
SOURCE FILE: MECR# 1895	DWG. NO.: OL-0119-821-3	ASSY. PROC.: -