DWG NO.	REV.
OL–0510–02–1	A

PLATING VARIATIONS

PART NUMBER	BODY	CONTACT
0510–02	NICKEL	GOLD
0510–02–NS	NICKEL	SILVER

a level)

ea level)
+165°C

2.0 MATERIALS
2.1 DIELECTRIC: TEFLON, ASTM–D–1710
2.2 CENTER CONTACT: BERYLLIUM COPPER ASTM–B–196
2.3 LOCKING RING: PHOSPHOR BRONZE, ASTM–B–159, ALLOY 510
2.4 ALL OTHER METAL PARTS: BRASS PER ASTM–B–16
2.5 GASKET: SILICON RUBBER, ZZ–R–765, GR. 50, RED
3.0 FINISHES: SEE TABLE
4.0 MECHANICAL
4.1 INTERFACE: IN ACCORDANCE WITH MIL–STD–348

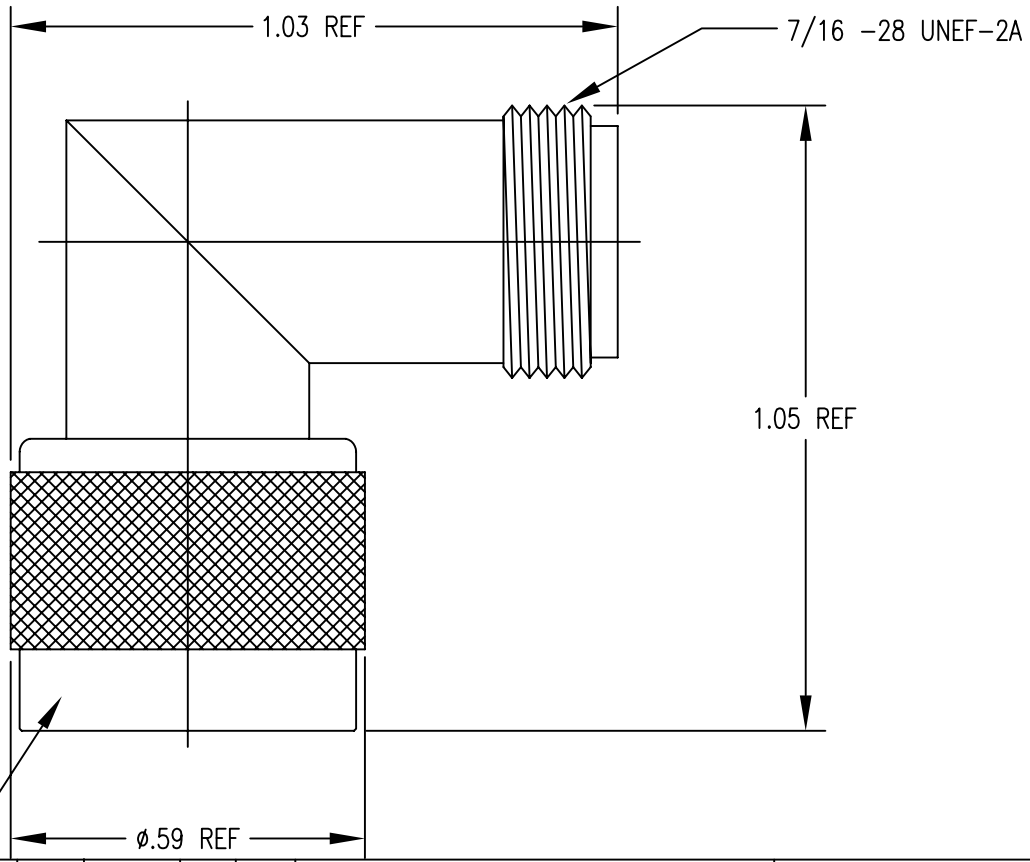

Disp.	Date	Dwn.	Appd.
NEW	11/19/03		

REMOVE ALL BURRS AND SHARP EDGES .005 MAX.

INTERPRET PER ASME Y14.5M–1994

THIS DRAWING CONTAINS CONFIDENTIAL INFORMATION PROPRIETARY TO SAN–TRON INC. IT MUST NOT BE REPRODUCED OR DISCLOSED TO OTHERS OR USED IN ANY OTHER WAY, IN WHOLE OR PART EXCEPT AS AUTHORIZED IN WRITING BY SAN–TRON INCORPORATED.

UNLESS OTHERWISE SPECIFIED:
ALL DIMENSIONS ARE IN INCHES.
ALL DIMENSIONS ARE AFTER PLATING.
.XXX= ±.005 ALL MACHINED SURFACES 63 MAX.
.XX= ±.01 ANG.±1/2° FRACTIONAL= ±1/64
◎ .004 MAX. TIR. ⊥ AXIS .001

THIRD ANGLE PROJECTION

DWN	FSH	11/19/03
CHKD	SJS	11/19/03
APPR	FSH	11/19/03

SAN-TRON, INC.
4 NEWBURYPORT TPK. IPSWICH MA USA 01938
TEL: 978 - 356 -1585 FAX: 978 - 356 -1573
WWW. santron.com E MAIL: santron@santron.com

TITLE ADAPTER, RIGHT ANGLE, TNC, M/F
TNC–A–RA

MATERIAL: SEE NOTE 2.0

FINISH: SEE TABLE

CAGE CODE: 50896

SCALE N/A

DWG NO. OL–0510–02–1 REV. A