REV.	DATE	DESCRIPTION
NC	06/13/99	INITIAL RELEASE
A	05/22/05	UPDATE DRAWING FORMAT/ MODIFY PLATING SPEC

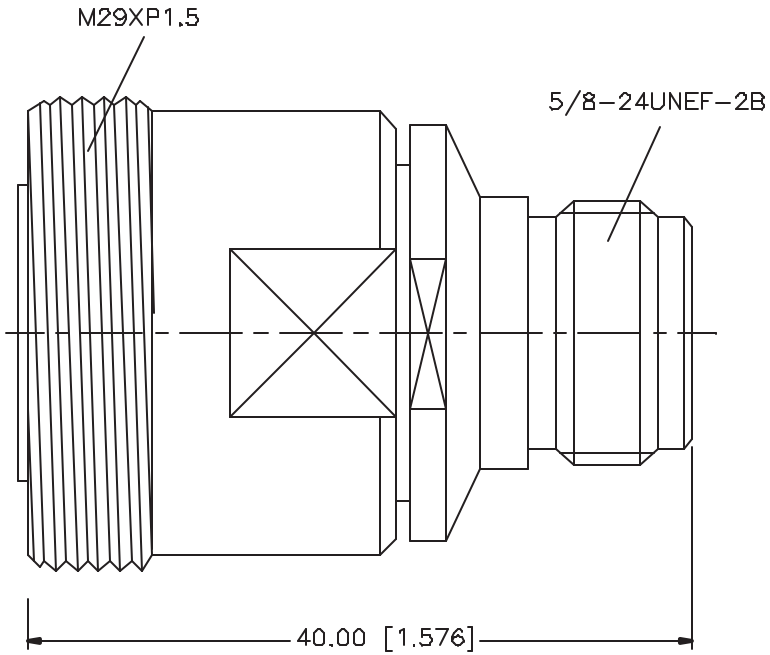

	DESCRIPTION	MATERIAL	FINISH	QTY
8				
7				
6				
5				
4				
3	CONTACT PIN	BER. COPPER	SILVER	1
2	INSULATOR	TEFLON	NATURAL	1
1	BODY	BRASS	NEXCOTE	1

UNLESS OTHERWISE SPECIFIED DIMENSIONS ARE IN MILLIMETERS, DIMENSIONS IN [ ] ARE IN INCHES AND FOR CUSTOMER REFERENCE ONLY.

UNLESS OTHERWISE SPECIFIED TOLERANCES FOR MILLIMETERS ARE:
0.5 – 8mm ± 0.20mm
8 – 30mm ± 0.40mm
30 – 120mm ± 0.60mm

UNLESS OTHERWISE SPECIFIED TOLERANCES FOR INCHES ARE:
.020 – .315 = ± 0.007"
.315 – 1.180 = ± 0.015"
1.180 – 4.724 = ± 0.020"

DO NOT SCALE DRAWING

APPROVALS		DATE
DRAWN	G.R.S.	05/22/05
CHECKED		
ISSUED		
SHEET	1 OF 1	

CAD FILE C:/242/242137.DWG

Amphenol Connex

PART DESCRIPTION: N JACK TO 7/16 JACK

PART NO. 242137

DWG. NO. 242137.DWG | REV. A | SIZE A | SCALE NA