REVISIONS				
ZONE	REV.	DESCRIPTION	DATE	APPROVED
	–	ORIGINAL RELEASE	8/4/99	

DESCRIPTION:

PMI MODEL APD-8-34 IS AN EIGHT WAY STRIPLINE POWER DIVIDER FEATURING HIGH ISOLATION AND LOW INSERTION LOSS. DESIGNED FOR 3.6 TO 4.2 GHz OPERATION AND HIGH RELIABILITY.

SPECIFICATIONS:

- FREQUENCY: ..... 3.6 GHz TO 4.2 GHz
- INSERTION LOSS: ..... 0.8 dB MAXIMUM
- VSWR INPUT: ..... 1.5:1 MAXIMUM
- VSWR OUTPUT: ..... 1.5:1 MAXIMUM
- ISOLATION: ..... 17.0 dB MINIMUM
- AMPLITUDE BALANCE: ..... ±0.5 dB
- PHASE BALANCE: ..... ±9°
- AVERAGE POWER INTO LOAD VSWR: ..... 1.2:1 25 WATTS; 2.0:1 7.5 WATTS; ∞:1 0.75 WATTS
- SIZE: ..... 4.10 (L) X 2.15 (W) X 0.40 (H)

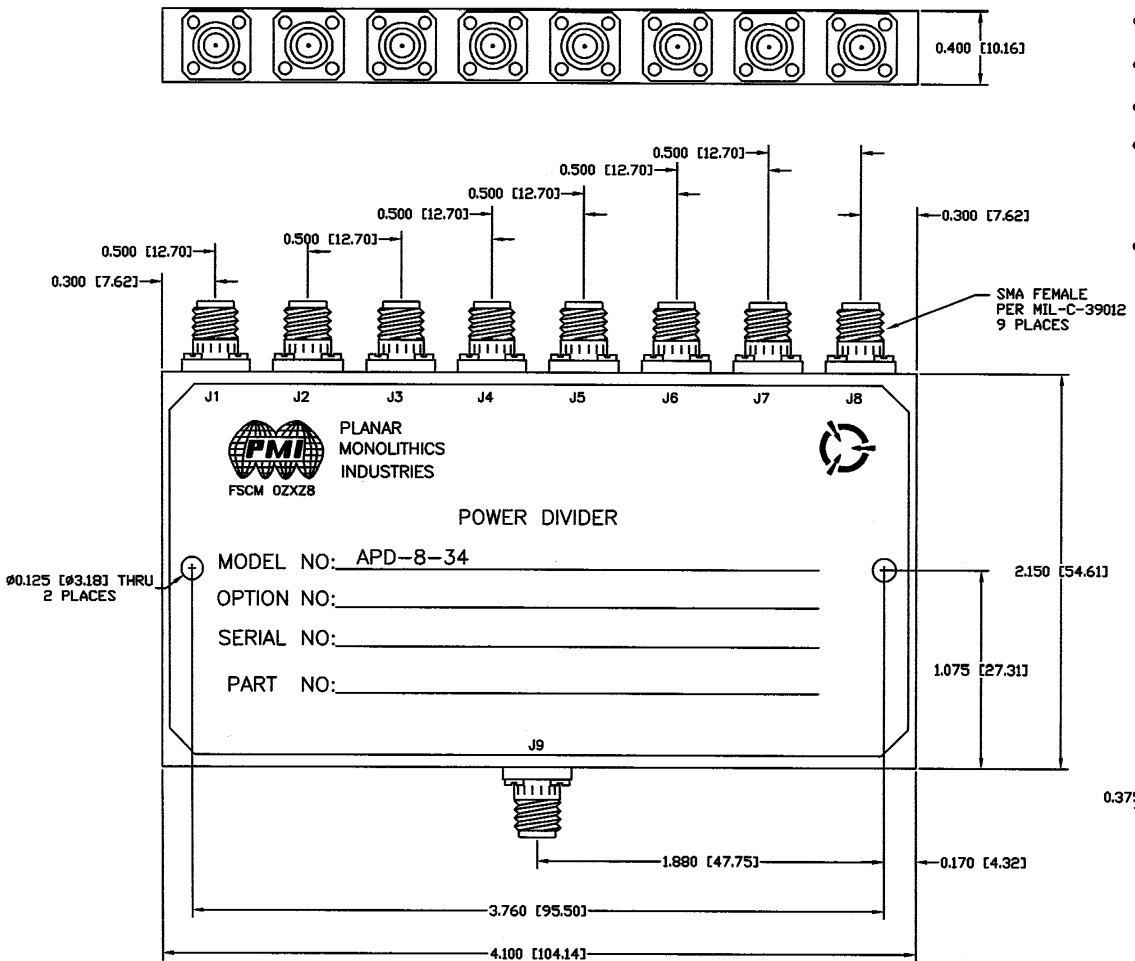

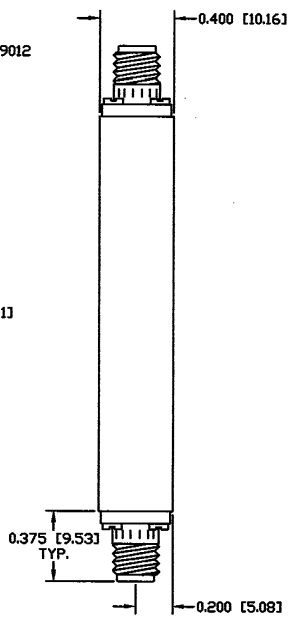

ENVIRONMENTAL RATINGS:

- TEMPERATURE: ..... −54°C TO +55°C (OPERATING)
  −65°C TO +100°C (STORAGE)
- HUMIDITY: ..... MIL-STD-202F, METHOD 103B, COND. B
- SHOCK: ..... MIL-STD-202F, METHOD 213B COND. B
- VIBRATION: ..... MIL-STD-202F, METHOD 204D COND. B
- ALTITUDE: ..... MIL-STD-202F, METHOD 105C COND. B
- TEMPERATURE CYCLE: ..... MIL-STD-202F, METHOD 107D COND. A

NOTE: THE ABOVE SPECIFICATIONS ARE SUBJECT TO CHANGE OR REVISION

ALL DIMENSIONS ARE IN INCHES
TOLERANCES:
X.XX ±0.020
X.XXX ±0.010

PART NO.	
APPROVALS	DATE
DRAWN WSP	8/4/99
CHECKED	
ISSUED	

PLANAR MONOLITHICS INDUSTRIES
FREDERICK, MARYLAND

TITLE
OUTLINE DRAWING
APD-8-34
8WAY POWER DIVIDER

SIZE	FSCM NO.	DWG NO.	REV.
A	0ZXZ8	100-4964-3	–

SCALE | SHEET 1 of 1