REVISIONS				
ZONE	REV.	DESCRIPTION	DATE	APPROVED
	–	ORIGINAL RELEASE	9/28/09	

Description:

Low Noise Amplifier designed for Military and Industrial applications. This amplifier is supplied in our standard PE2 housings in a cascade layout that can be used as a SMA connectorized or a surface mount component. Other packages and connector types are available.

This model provides the following performance. Data is available upon request.

Specifications:

Frequency Range:	2.0 to 8.0 GHz
Gain:	60dB Typ.
Gain Flatness:	+/-1.25dB Max.
Noise Figure:	4.0dB Typ.
OP1dB:	20dBm Min.
VSWR Input/Output:	2.0:1 Max.
DC Voltage Supply:	+12 to +15VDC
DC Current Draw:	430mA Max.

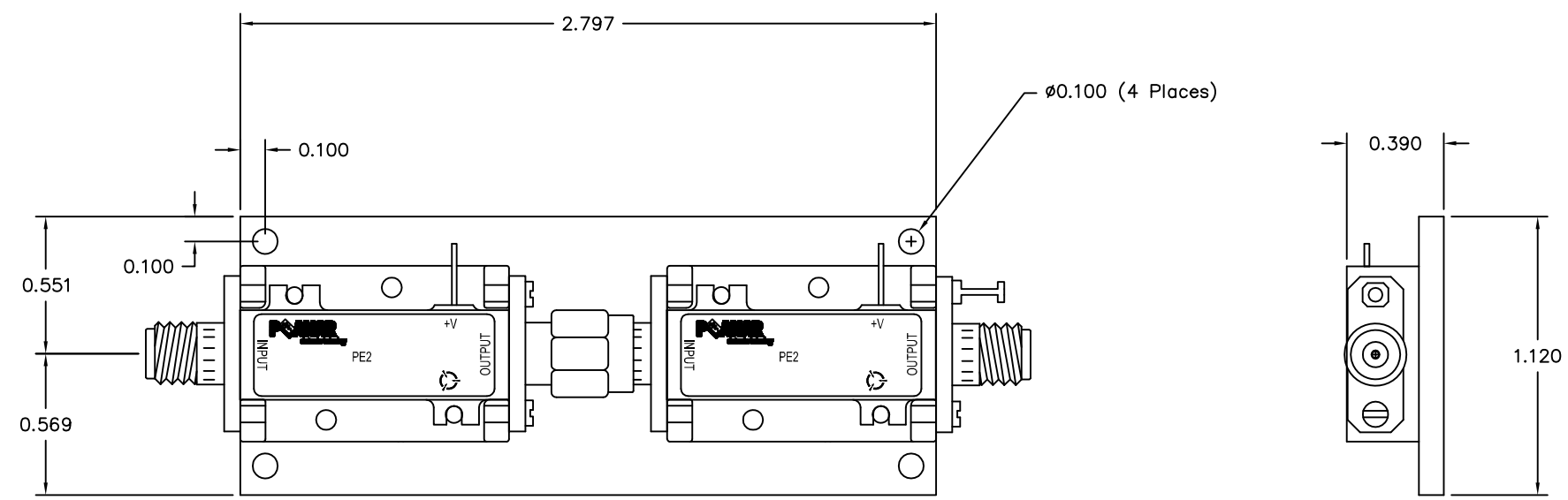

Features:

Internal Voltage Regulation
Unconditional Stability
Standard Operating Temperature -20 to +70 Deg. C

Available Options:

Various Package types
Various Connector types
Temperature Compensation
Hermetic Sealing
Gain and Phase Matching
MIL-STD-883 Screening Available

Environmental Ratings:

Temperature:	-20 to +70 Deg. C (Operating) ; -55 to +85 Deg C Available)
	-55 to +125 Deg. C (Storage)
Humidity:	MIL-STD-202F, METHOD 103B COND B.
Shock:	MIL-STD-202F, METHOD 213B COND B.
Altitude:	MIL-STD-202F, METHOD 105C COND B.

Temperature Cycle: MIL-STD-202F, METHOD 107D COND A

Note: The above specifications are subject to change or revision.

UNLESS OTHERWISE SPECIFIED
DIMENSIONS ARE IN INCHES
TOLERANCES ARE:

FRACTIONS	DECIMALS	ANGLES
±	.XX ± 0.010	±
	.XXX ± 0.005	

MATERIAL:
6061–T6 Aluminum

FINISH:
Gold Plate over Nickel

DO NOT SCALE DRAWING

PART NO.

APPROVALS	DATE
DRAWN K Mason	9/28/09
CHECKED	
ISSUED	

PLANAR Microwave Technology
5715 Industry Lane, Unit 11
FREDERICK, MARYLAND

TITLE PRODUCT FEATURE
PE2-60-2R08R0-4R0-22-12-SFF-WEB

SIZE	CAGE CODE	DWG NO.	REV.
B	1LK53	WEB – MODEL	A

SCALE N/A SHEET 1 OF 1