REVISIONS				
ZONE	REV.	DESCRIPTION	DATE	APPROVED
	1	ORIGINAL RELEASE	08/19/13	
	A1	ECN # 14-0051	03/15/14	

Description:

PMI model number PE2-15-8G20G-4R0-20-SFF is a low noise amplifier capable of operating between the frequency range of 8.0 to 20.0 GHz. This amplifier is supplied in our standard PE2 housing that can be used as a SMA connectorized or a surface mount component.

Specifications:

Frequency Range:	8.0 to 20.0 GHz
Gain:	12dB Min.
	15dB Nominal
Gain Flatness:	+/- 1.25dB Typ.
	+/- 1.5dB Max.
Noise Figure:	4.0dB Typ.
	5.0dB Max.
OP1dB:	+20dBm Typ.
	+17dBm Min.
VSWR Input/Output:	2.0:1 Max.
Input Power:	+17dBm CW Max.
DC Supply:	+11 to +15VDC @ 225mA Nominal
Connectors In/Out:	SMA (F)
Finish:	Gold Plated

PE2 HOUSING WITH CARRIER

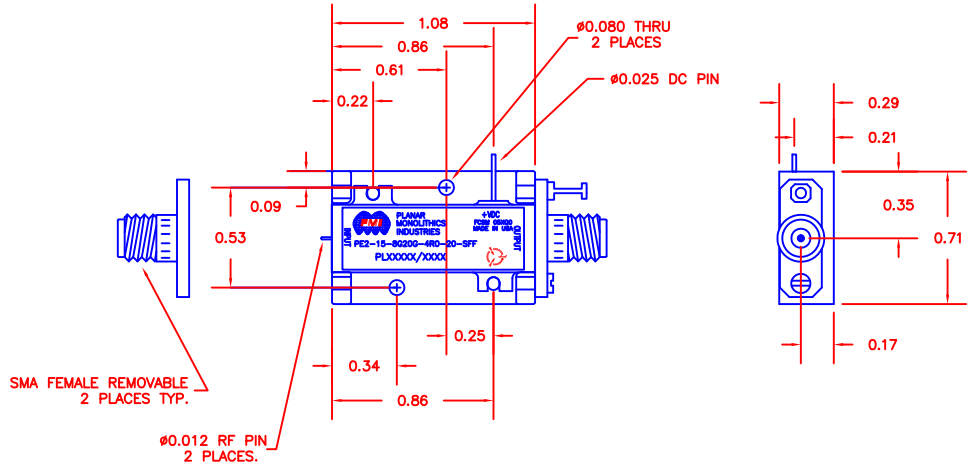

PE2 HOUSING WITHOUT CARRIER (SURFACE MOUNT)

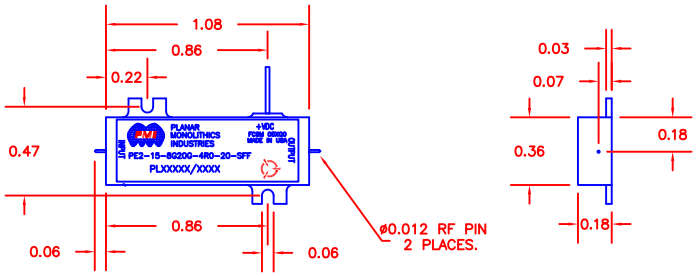

PMI CONFIDENTIAL AND PROPRIETARY

ENVIRONMENTAL RATINGS

TEMPERATURE:	-55°C TO + 85°C (OPERATING)
	-65°C TO +125°C (STORAGE)
HUMIDITY:	MIL-STD-202F, METHOD 103B COND. B
SHOCK:	MIL-STD-202F, METHOD 213B COND. B
VIBRATION:	MIL-STD-202F, METHOD 204D COND. B
ALTITUDE:	MIL-STD-202F, METHOD 105C COND. B
TEMPERATURE CYCLE:	MIL-STD-202F, METHOD 107D COND. A

NOTE: SPECIFICATIONS WILL VARY OVER OPERATING TEMPERATURE
NOTE: THE ABOVE SPECIFICATIONS ARE SUBJECT TO CHANGE OR REVISION

ALL DIMENSIONS ARE IN INCHES
TOLERANCES:
X.XX ±0.020
X.XXX ±0.010

PLANAR MONOLITHICS INDUSTRIES, INC.
7311-F GROVE ROAD
FREDERICK, MARYLAND 21704 USA
TEL: 301-662-5019 FAX: 301-662-1731
WEBSITE: www.pmi-rf.com
E-MAIL: sales@pmi-rf.com
ISO 9001 CERTIFIED

APPROVALS	DATE
DRAWN ANG	08/19/13
CHECKED	
ISSUED	

TITLE: PRODUCT FEATURE
PE2-15-8G20G-4R0-20-SFF

SIZE	FSCM NO.	DWG NO.	REV.
A	05XQ0	27020541	A1

SCALE N:S SHEET 1 OF 1