REVISIONS				
ZONE	REV	DESCRIPTION	DATE	APPROVED

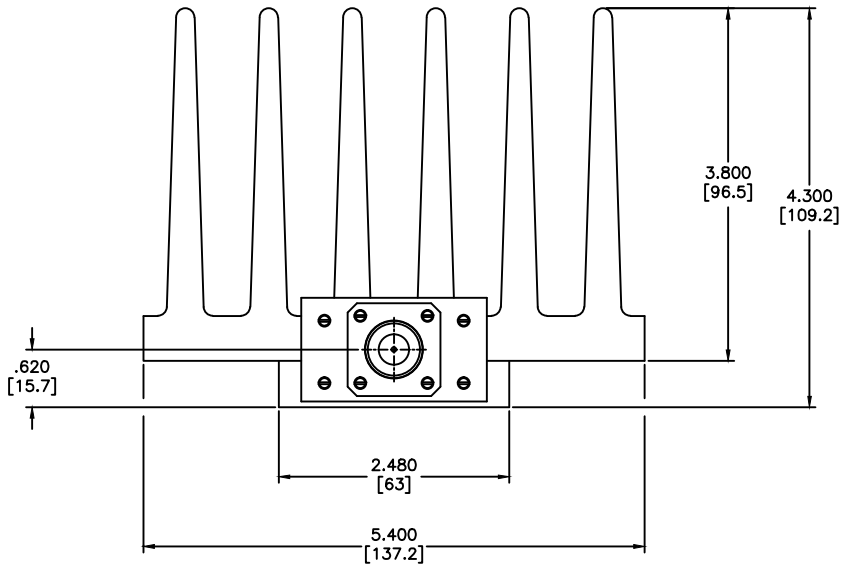

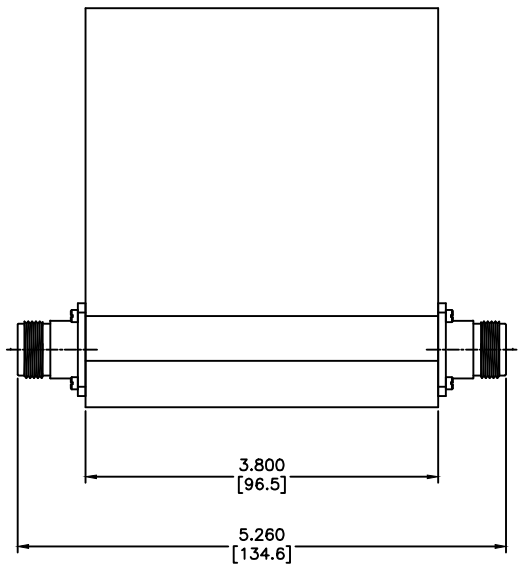

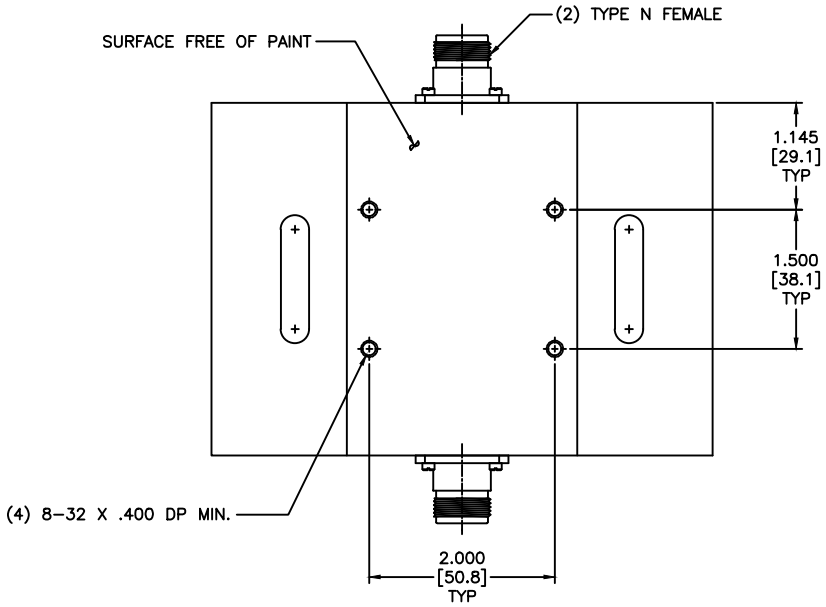

SPECIFICATIONS

Frequency Range:	DC–2 GHz
VSWR:	1.30:1 Max.
Power @ 25°C:	150 Watts
Attenuation Accuracy:	30±0.75dB
Operating Temperature:	–65°C to +125°C
Impedance:	50 ohms
Mechanical	
Shell:	Passivated Stainless Steel
Contact:	Gold Plated Beryllium Copper
Housing:	Anodized Aluminum

MATERIAL:

MCLI

MICROWAVE COMMUNICATIONS LABORATORIES INC.
7255 30TH AVE. N. SAINT PETERSBURG, FL 33710
TEL: (727) 344-8254 FAX: (727) 381-6116
http://WWW.MCLI.COM

SCALE: N/A
SHEET: N/A

UNLESS OTHERWISE SPECIFIED:
TOLERANCES
IN (INCHES) OR [mm] (MILLIMETERS)
FRACTIONS: ± 1/64
DECIMALS: ±.01 ±.005
ANGLE: ±1/2°

DRAWING TITLE: 150 WATTS ATTENUATOR

PART NO.: FAN-10-30/FF

DRAWN: Paiboon Luekhamhan — DATE: 05-17-2000

APPROVED: T. Nguyen — 05-17-2000

CONFIDENTIAL NOTICE:
THE INFORMATION IN THIS DRAWING IS PROPRIETARY AND SHALL NOT BE USED OR DISCLOSED WITHOUT WRITTEN PERMISSION FROM MICROWAVE COMMUNICATIONS LABORATORIES INC. (MCLI)

THIRD ANGLE PROJECTION

CAGE CODE: 0D2L5

SIZE: C — REV: N/A — DO NOT SCALE THE DRAWING

DWG NO.: 81530