DC-4G12.4G-20-S is a 20±1dB coupling directional coupler , designed to operate over the 4.0 to 12.4 GHz frequency range, with compact size. This model is designed to handle 50W mx input power, and also performs with low insertion loss of 0.5dB max and with coupling flatness of ±0.4dB max, and low VSWR of 1.3 max.

Mechanical Outline(Inch/mm):

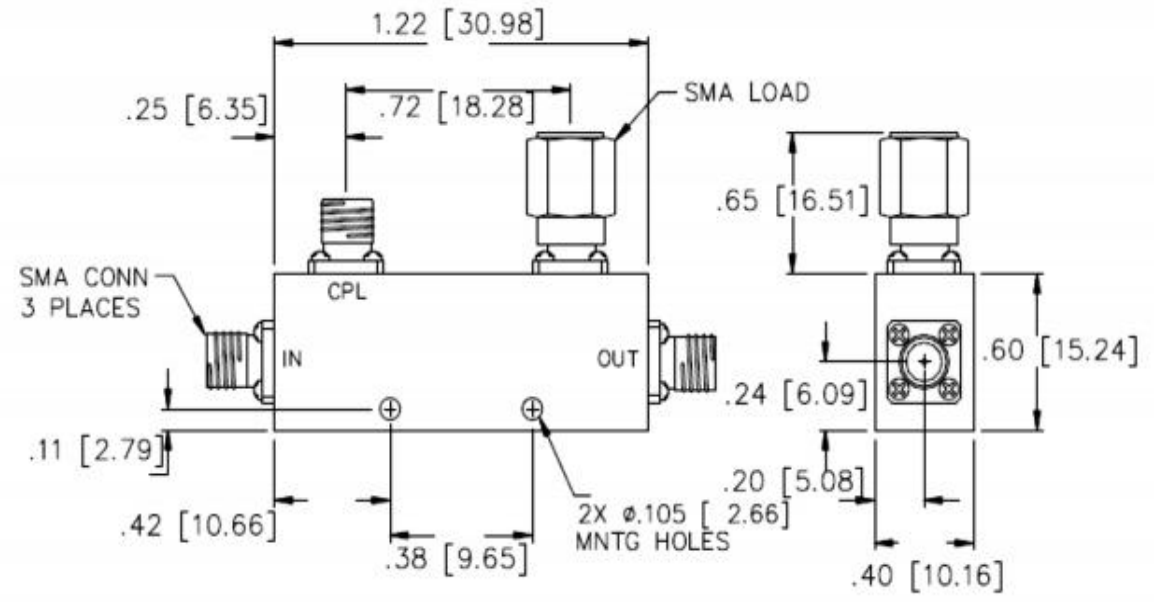

Specifications:

Coupling:	20±1dB
Frequency:	4.0 to 12.4 GHz
Insertion Loss:	0.5dB max
Coupling flatness:	±0.4dB max
Directivity:	17dB min
Power Handling:	50W max
VSWR:	1.3:1 max
Connectors:	SMA-F(N optional)

Environmental Ratings:

Temperature:	-25°C to +71 °C Operating
	-65 °C to +100 °C Non-Operating
Vibration:	MIL-STD-202F, Method 204D Cond. B
Altitude:	MIL-STD-202F, Method 105C Cond. B
Temperature Cycle:	MIL-STD-202F, Method 107D Cond. A

Directional Coupler
DC-4G12.4G-20-S

DRAWN:	DWG NO.:	REV CODE: Rev.1.0	CONNPHY Microwave Inc. www.connphy.com sales@connphy.com
CHECKRD:	DATE: 18/04/15	SHEET : 1 OF 1	
ISSUED:	SIZE: A	SCALE : N / A	Notes: SPEC ARE SUBJECT TO CHANGE WITHOUT NOTICE.