REVISIONS				
ZONE	REV	DESCRIPTION	DATE	APPROVED

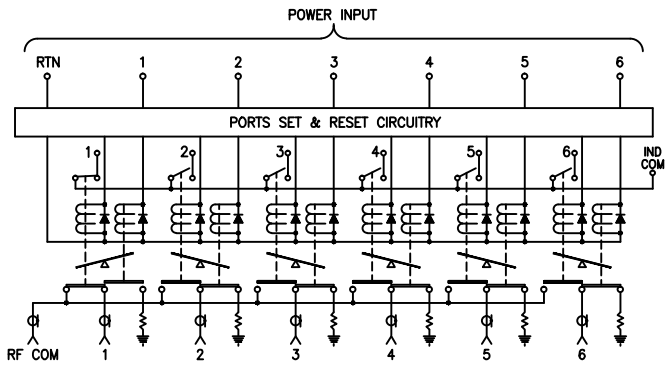

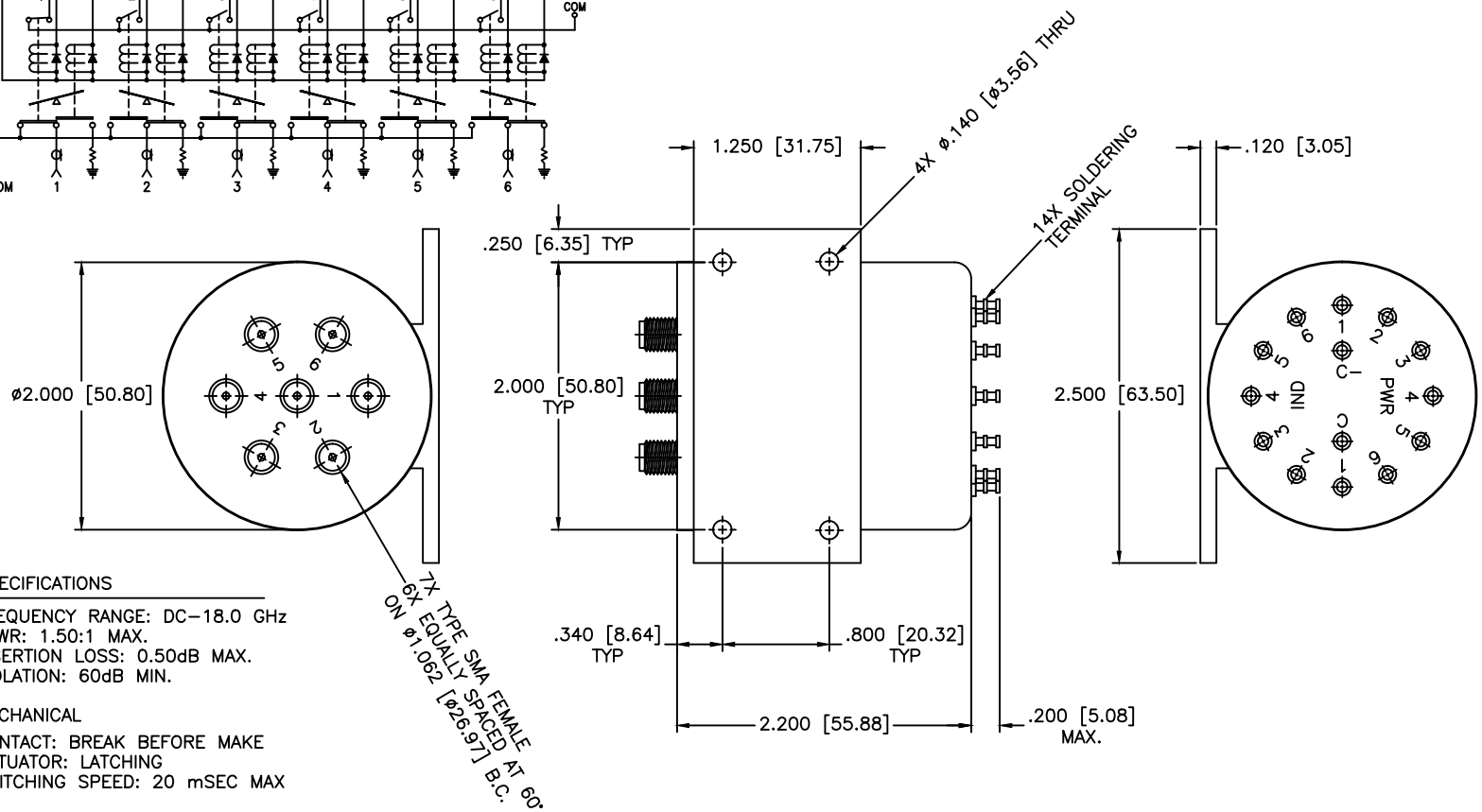

SPECIFICATIONS

FREQUENCY RANGE: DC−18.0 GHz
VSWR: 1.50:1 MAX.
INSERTION LOSS: 0.50dB MAX.
ISOLATION: 60dB MIN.

MECHANICAL

CONTACT: BREAK BEFORE MAKE
ACTUATOR: LATCHING
SWITCHING SPEED: 20 mSEC MAX

ELECTRICAL

ACTUATOR VOLTAGE: 28.0 Vdc (22.0−32.0 Vdc)
ACTUATOR CURRENT: 600mA MAX @ 28.0 Vdc
POWER HANDLING: 200W CW @ 1.0GHz
IMPEDANCE: 50 Ohms

ENVIRONMENTAL

OPERATING TEMP: −54°C to +90°C
SINE VIBRATION: 30 G'S rms
LIFE: 1,000,000 CYCLES
RANDOM VIBRATION: 20 G'S rms

MATERIAL:

DRAWN: Paiboon Luekhamhan — DATE: 03-02-2009
APPROVED: T. Nguyen — DATE: 03-02-2009

MCLI
MICROWAVE COMMUNICATIONS LABORATORIES INC.
7255 30TH AVE. N. SAINT PETERSBURG, FL 33710
TEL: (727) 344-6254 FAX: (727) 381-6116
http://WWW.MCLI.COM

UNLESS OTHERWISE SPECIFIED:
TOLERANCES
IN (INCHES) OR [mm] (MILLIMETERS)
FRACTIONS: ± 1/64
DECIMALS: ±.01 ±.005
ANGLE: ±1/2°

PROPRIETARY NOTICE:
THE INFORMATION IN THIS DRAWING IS PROPRIETARY AND SHALL NOT BE USED OR DISCLOSED WITHOUT WRITTEN PERMISSION FROM MICROWAVE COMMUNICATIONS LABORATORIES INC. (MCLI)

THIRD ANGLE PROJECTION

SCALE: N/A
SHEET: N/A

DRAWING TITLE: ELECTROMECHANICAL SWITCHES

PART NO. W6-7-LIS

CAGE CODE: 0D2L5
SIZE: N/A
REV: N/A
DO NOT SCALE THE DRAWING
DWG NO. 84234