REVISIONS				
ZONE	REV	DESCRIPTION	DATE	APPROVED

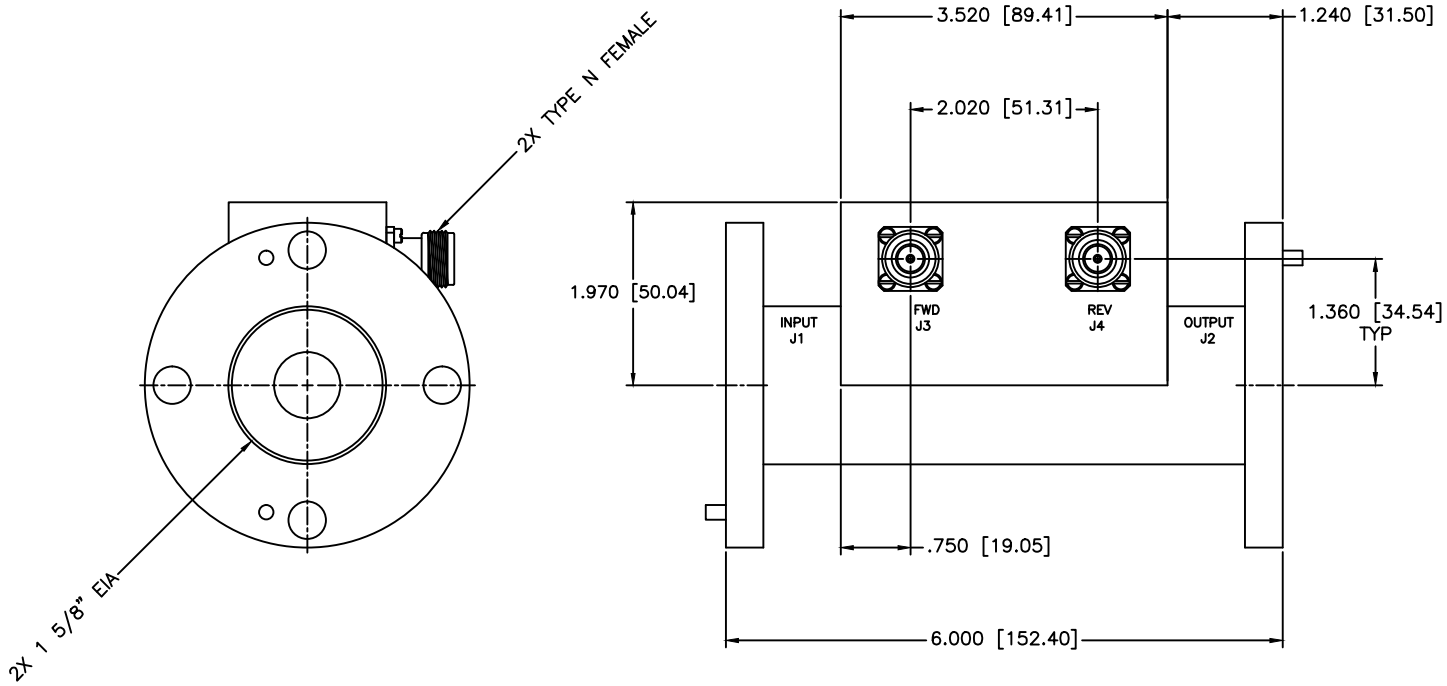

SPECIFICATIONS

FREQUENCY RANGE:	1–30 MHz
FLATNESS:	±0.5dB
INSERTION LOSS:	0.05dB Max.
DIRECTIVITY:	35dB Min.
VSWR:	1.05:1 Max.
POWER:	15kW CW

MATERIAL:

DRAWN: Paiboon Luekhamhan DATE: 01-04-2011

APPROVED: T. Nguyen DATE: 01-04-2011

MCLI

MICROWAVE COMMUNICATIONS LABORATORIES INC.
7255 30TH AVE. N. SAINT PETERSBURG, FL 33710
TEL: (727) 344-6254 FAX: (727) 381-6116
hhtp://WWW.MCLI.COM

SCALE: N/A

SHEET: N/A

UNLESS OTHERWISE SPECIFIED:
TOLERANCES
IN (INCHES) OR [mm] (MILLIMETERS)
FRACTIONS: ± 1/64
DECIMALS: ±.01 ±.005
ANGLE: ±1/2°

PROPRIETARY NOTICE:
THE INFORMATION IN THIS DRAWING IS PROPRIETARY AND SHALL NOT BE USED OR DISCLOSED WITHOUT WRITTEN PERMISSION FROM MICROWAVE COMMUNICATIONS LABORATORIES INC. (MCLI)

THIRD ANGLE PROJECTION

DRAWING TITLE: HIGH POWER DUAL DIRECTIONAL COUPLER

PART NO. HDL-18-70

CAGE CODE: 0D2L5

SIZE: C

REV: N/A

DO NOT SCALE THE DRAWING

DWG NO. 85185