OPA830-EP Low-Power, Single-Supply, Wideband Operational Amplifier

1 Features

- High Bandwidth:
  - 250MHz (G = +1)
  - 110MHz (G = +2)
- Low Supply Current:
  - 3.9mA (V_S = +5V)
- Flexible Supply Range:
  - ±1.4V to ±5.5V Dual Supply
  - +2.8V to +11V Single Supply
- Input Range Includes Ground On Single Supply
- 4.88V Output Swing on +5V Supply
- High Slew Rate: 550V/µs
- Low Input Voltage Noise: 9.2nV/√Hz
- Pb-Free SOT23 Package

2 Applications

- Single-supply Analog-to-Digital Converter (ADC) Input Buffers
- Single-supply Video Line Drivers
- CCD Imaging Channels
- low-power Ultrasound
- PLL Integrators
- Portable Consumer Electronics

3 Description

The OPA830 is a low-power, single-supply, wideband, voltage-feedback amplifier designed to operate on a single +5V supply. Operation on ±5V or +10V supplies is also supported. The input range extends below the negative supply and to within 1.7V of the positive supply. Using complementary common-emitter outputs provides an output swing to within 25mV of either supply while driving 150Ω. High output drive current (±80mA) and low differential gain and phase errors also make them ideal for single-supply consumer video products.

Low distortion operation is ensured by the high gain bandwidth product (110MHz) and slew rate (550V/µs), making the OPA830 an ideal input buffer stage to 3V and 5V CMOS ADCs. Unlike other low-power, single-supply amplifiers, distortion performance improves as the signal swing is decreased. A low 9.2nV/√Hz input voltage noise supports wide dynamic range operation.

The OPA830 is available in an ultra-small SOT23-5 package.

Device Information

ORDER NUMBER	PACKAGE	BODY SIZE
OPA830-EPDBV	SOT-23 (5)	2.9 mm x 1.6 mm

DC-Coupled, +3V ADC Driver

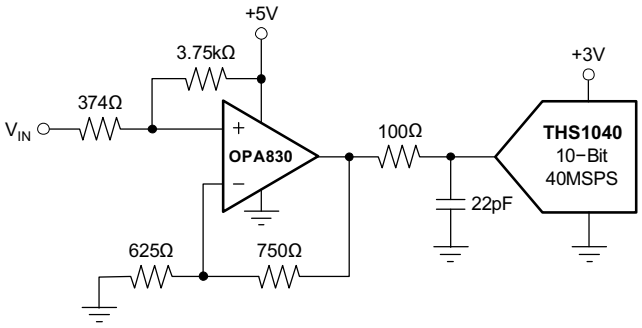

An IMPORTANT NOTICE at the end of this data sheet addresses availability, warranty, changes, use in safety-critical applications, intellectual property matters and other important disclaimers. PRODUCTION DATA.

Table of Contents

1 Features 1
2 Applications 1
3 Description 1
4 Revision History 2
5 Terminal Configuration and Functions 3
6 Specifications 3
6.1 Absolute Maximum Ratings 3
6.2 Handling Ratings 3
6.3 Recommended Operating Conditions 4
6.4 Thermal Information 4
6.5 Electrical Characteristics, V_S = ±5V 4
6.6 Electrical Characteristics, V_S = +5V 6
6.7 Typical Characteristics V_S = ±5V 8
6.8 Typical Characteristics V_S = ±5V, Differential Configuration 11
6.9 Typical Characteristics V_S = +5V 12
6.10 Typical Characteristics V_S = +5V, Differential Configuration 16
7 Detailed Description 17
7.1 Overview 17
7.2 Functional Block Diagram 17
7.3 Feature Description 17
8 Applications and Implementation 18
8.1 Application Information 18
8.2 Typical Applications 18
9 Power Supply Recommendations 28
10 Layout 28
10.1 Layout Guidelines 28
10.2 Input and ESD Protection 29
10.3 Layout Example 30
11 Device and Documentation Support 32
11.1 Trademarks 32
11.2 Electrostatic Discharge Caution 32
11.3 Glossary 32
12 Mechanical, Packaging, and Orderable Information 32

4 Revision History

DATE	REVISION	NOTES
March 2014	*	Initial release

Copyright © 2014, Texas Instruments Incorporated

5 Terminal Configuration and Functions

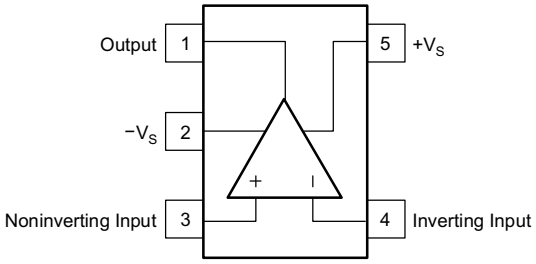

SOT23−5

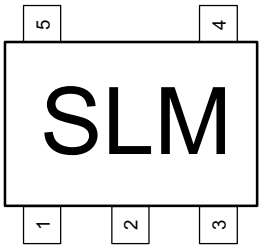

Terminal Orientation/Package Marking

Terminal Functions

TERMINAL		I/O	DESCRIPTION
NAME	NO.		
OUT	1	O	Amplifier Output
$-V_S$	2	I	Negative Amplifier Power Supply Input
+IN	3	I	Non-inverting Amplifier Input
-IN	4	I	Inverting Amplifier Input
$+V_S$	5	I	Positive Amplifier Power Supply Input

6 Specifications

6.1 Absolute Maximum Ratings

over operating free-air temperature range (unless otherwise noted) (1)

		MIN	MAX	UNIT
	Power Supply		$12V_{DC}$	V
	Internal Power Dissipation		See Thermal Analysis	
	Differential Input Voltage		±2.5	V
	Input Voltage Range (Single Supply)	–0.5	$+V_S$ + 0.3	V
	Lead Temperature (soldering, 10s)		300	°C
T_J	Junction Temperature		150	°C

(1) These are stress ratings only, which do not imply functional operation of the device at these or any other conditions beyond those indicated under Recommended Operating Conditions.

6.2 Handling Ratings

		MIN	MAX	UNIT
T_{stg}	Storage Temperature Range: D, DBV	–65	125	°C
ESD Rating (1)	Human Body Model (HBM) (2)		2000	V
	Charge Device Model (CDM) (3)		1500	V
	Machine Model (MM)		200	V

(1) Electrostatic discharge (ESD) to measure device sensitivity and immunity to damage caused by assembly line electrostatic discharges in to the device.
(2) Level listed above is the passing level per ANSI, ESDA, and JEDEC JS-001. JEDEC document JEP155 states that 500-V HBM allows safe manufacturing with a standard ESD control process.
(3) Level listed above is the passing level per EIA-JEDEC JESD22-C101. JEDEC document JEP157 states that 250-V CDM allows safe manufacturing with a standard ESD control process.

Copyright © 2014, Texas Instruments Incorporated

6.3 Recommended Operating Conditions

over operating free-air temperature range (unless otherwise noted)

		MIN	NOM	MAX	UNIT
	Dual supply voltage		±5	±5.5	V
	Single supply voltage		5	11	V
T_J	Operating junction temperature	-40		105	°C

6.4 Thermal Information

THERMAL METRIC(1)		OPA830-EP	UNIT
		DBV (5 TERMINAL)	
$R_{\theta JA}$	Junction-to-ambient thermal resistance	218.8	°C/W
$R_{\theta JCtop}$	Junction-to-case (top) thermal resistance	87.0	
$R_{\theta JB}$	Junction-to-board thermal resistance	45.2	
ψ_{JT}	Junction-to-top characterization parameter	4.4	
ψ_{JB}	Junction-to-board characterization parameter	44.4	
$R_{\theta JCbot}$	Junction-to-case (bottom) thermal resistance	N/A	

(1) For more information about traditional and new thermal metrics, see the *IC Package Thermal Metrics* application report, SPRA953.

6.5 Electrical Characteristics, V_S = ±5V

At -40°C ≤ T_J ≤ 105°C, G = +2, R_F = 750Ω, and R_L = 150Ω to GND, unless otherwise noted (see Figure 52).

PARAMETER	CONDITIONS	OPA830TDBV			UNIT
		MIN	TYP	MAX	
AC PERFORMANCE (see Figure 52)(1)					
Small-Signal Bandwidth	G = +1, V_O ≤ 0.2V_{PP}		310		MHz
	G = +2, V_O ≤ 0.2V_{PP}, -40°C to 85°C	65	120		
	G = +5, V_O ≤ 0.2V_{PP}, -40°C to 85°C	15	25		
	G = +10, V_O ≤ 0.2V_{PP}, -40°C to 85°C	6	11		
Gain-Bandwidth Product	G ≥ +10, -40°C to 85°C	80	110		MHz
Peaking at a Gain of +1	V_O ≤ 0.2V_{PP}		6		dB
Slew Rate	G = +2, 2V Step, -40°C to 85°C	260	600		V/µs
Rise Time	0.5V Step, -40°C to 85°C		3.3	5.9	ns
Fall Time	0.5V Step, -40°C to 85°C		3.5	6	ns
Settling Time to 0.1%	G = +2, 1V Step, -40°C to 85°C		42	66	ns
Harmonic Distortion	V_O = 2V_{PP}, f = 5MHz, -40°C to 85°C				
2nd-Harmonic	R_L = 150Ω, -40°C to 85°C		–67	−56	dBc
	R_L ≥ 500Ω, -40°C to 85°C		–71	−60	
3rd-Harmonic	R_L = 150Ω, -40°C to 85°C		–60	−48	dBc
	R_L ≥ 500Ω, -40°C to 85°C		–77	−59	
Input Voltage Noise	f > 1MHz, -40°C to 85°C		9.5	11.5	nV/√Hz
Input Current Noise	f > 1MHz, -40°C to 85°C		3.7	5.7	pA/√Hz
NTSC Differential Gain			0.07%		
NTSC Differential Phase			0.17		°

(1) Limits set by simulation based on −40°C to 85°C.

Copyright © 2014, Texas Instruments Incorporated

Electrical Characteristics, V_S = ±5V (continued)

At -40°C ≤ T_J ≤ 105°C, G = +2, R_F = 750Ω, and R_L = 150Ω to GND, unless otherwise noted (see Figure 52).

PARAMETER	CONDITIONS	OPA830TDBV			UNIT
		MIN	TYP	MAX	
DC PERFORMANCE (2)	R_L = 150Ω				
Open-Loop Voltage Gain		64	74		dB
Input Offset Voltage			±1.5	±8.6	mV
Average Offset Voltage Drift				±35	µV/°C
Input Bias Current	V_{CM} = 0V		5	13	µA
Input Bias Current Drift				±12	nA/°C
Input Offset Current	V_{CM} = 0V		±0.1	±1.49	µA
Input Offset Current Drift				±5	nA/°C
INPUT					
Negative Input Voltage (3)			–5.5	–5.1	V
Positive Input Voltage (3)		2.8	3.2		V
Common-Mode Rejection Ratio (CMRR)	Input-Referred	72	80		dB
Input Impedance					
Differential Mode			10 || 2.1		kΩ || pF
Common-Mode			400 || 1.2		kΩ || pF
OUTPUT					
Output Voltage Swing	G = +2, R_L = 1kΩ to GND	±4.84	±4.88		V
	G = +2, R_L = 150Ω to GND	±4.56	±4.64		
Current Output, Sinking and Sourcing		±55	±85		mA
Short-Circuit Current	Output Shorted to Ground		150		mA
Closed-Loop Output Impedance	G = +2, f ≤ 100kHz		0.06		Ω
POWER SUPPLY					
Minimum Operating Voltage			±1.4		V
Maximum Operating Voltage				±5.5	V
Maximum Quiescent Current	V_S = ±5V		4.25	5.9	mA
Minimum Quiescent Current	V_S = ±5V	3.19	4.25		mA
Power-Supply Rejection Ratio (+PSRR)	Input-Referred	59	66		dB

(2) Current is considered positive out of terminal.
(3) Tested <3dB below minimum specified CMRR at ± CMIR limits.

Copyright © 2014, Texas Instruments Incorporated

6.6 Electrical Characteristics, V_S = +5V

At -40°C ≤ T_J ≤ 105°C, G = +2, R_F = 750Ω, and R_L = 150Ω to V_S/2, unless otherwise noted (see Figure 51).

PARAMETER	CONDITIONS	OPA830TDBV			UNIT
		MIN	TYP	MAX	
AC PERFORMANCE (see Figure 51)(1)					
Small-Signal Bandwidth	G = +1, V_O ≤ 0.2V_{PP}		250		MHz
	G = +2, V_O ≤ 0.2V_{PP}, -40°C to 85°C	68	110		
	G = +5, V_O ≤ 0.2V_{PP}, -40°C to 85°C	15	24		
	G = +10, V_O ≤ 0.2V_{PP}, -40°C to 85°C	6	11		
Gain-Bandwidth Product	G ≥ +10, -40°C to 85°C	79	110		MHz
Peaking at a Gain of +1	V_O ≤ 0.2V_{PP}, -40°C to 85°C		5		dB
Slew Rate	G = +2, 2V Step, -40°C to 85°C	260	550		V/µs
Rise Time	0.5V Step, -40°C to 85°C		3.3	5.9	ns
Fall Time	0.5V Step, -40°C to 85°C		3.3	5.9	ns
Settling Time to 0.1%	G = +2, 1V Step, -40°C to 85°C		43	67	ns
Harmonic Distortion	V_O = 2V_{PP}, f = 5MHz				
2nd-Harmonic	R_L = 150Ω, -40°C to 85°C		–62	−53	dBc
	R_L ≥ 500Ω, -40°C to 85°C		–64	−56	
3rd-Harmonic	R_L = 150Ω, -40°C to 85°C		–58	−48	dBc
	R_L ≥ 500Ω, -40°C to 85°C		–84	−60	
Input Voltage Noise	f > 1MHz, -40°C to 85°C		9.2	11.2	nV/√Hz
Input Current Noise	f > 1MHz, -40°C to 85°C		3.5	5.5	pA/√Hz
NTSC Differential Gain			0.08%		
NTSC Differential Phase			0.09		°
DC PERFORMANCE(2)	R_L = 150Ω				
Open-Loop Voltage Gain		64	72		dB
Input Offset Voltage			±0.5	±6.7	mV
Average Offset Voltage Drift				±28	µV/°C
Input Bias Current	V_{CM} =2.5V		+5	13	µA
Input Bias Current Drift				±12	nA/°C
Input Offset Current	V_{CM} = 2.5V		±0.1	±1.41	µA
Input Offset Current Drift				±5	nA/°C
INPUT					
Least Negative Input Voltage(3)			–0.5	–0.2	V
Most Positive Input Voltage(3)		2.75	3.2		V
Common-Mode Rejection Ratio (CMRR)	Input-Referred	72	80		dB
Input Impedance					
Differential Mode			10 || 2.1		kΩ || pF
Common-Mode			400 || 1.2		kΩ || pF
OUTPUT					
Least Positive Output Voltage	G = +5, R_L = 1kΩ to 2.5V		0.09	0.13	V
	G = +5, R_L = 150Ω to 2.5V		0.21	0.26	
Most Positive Output Voltage	G = +5, R_L = 1kΩ to 2.5V	4.87	4.91		V
	G = +5, R_L = 150Ω to 2.5V	4.72	4.78		
Current Output, Sinking and Sourcing		±52	±80		mA
Short-Circuit Output Current	Output Shorted to Either Supply		140		mA
Closed-Loop Output Impedance	G = +2, f ≤ 100kHz		0.06		Ω

(1) Limits set by simulation based on −40°C to 85°C.
(2) Current is considered positive out of terminal.
(3) Tested <3dB below minimum specified CMRR at ± CMIR limits.

Copyright © 2014, Texas Instruments Incorporated

Electrical Characteristics, V_S = +5V (continued)

At -40°C ≤ T_J ≤ 105°C, G = +2, R_F = 750Ω, and R_L = 150Ω to V_S/2, unless otherwise noted (see Figure 51).

PARAMETER	CONDITIONS	OPA830TDBV			UNIT
		MIN	TYP	MAX	
POWER SUPPLY					
Minimum Operating Voltage			2.8		V
Maximum Operating Voltage				11	V
Maximum Quiescent Current	V_S = ±5V		3.9	5.5	mA
Minimum Quiescent Current	V_S = ±5V	3.05	3.9		mA
Power-Supply Rejection Ratio (+PSRR)	Input-Referred	59	66		dB

Copyright © 2014, Texas Instruments Incorporated

6.7 Typical Characteristics V_S = ±5V

At T_A = 25°C, G = +2, R_F = 750Ω, and R_L = 150Ω to GND, unless otherwise noted.

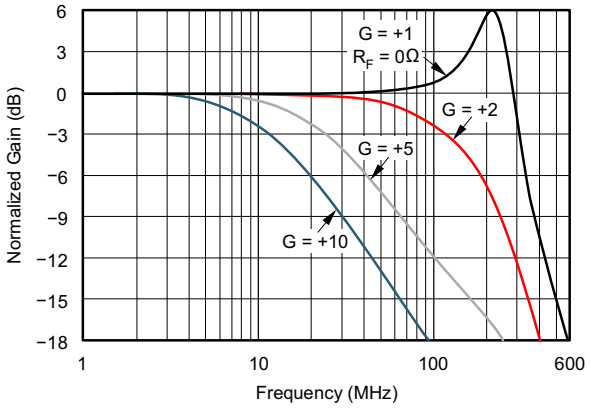

V_O = 0.2V_{PP} R_L = 150 Ω See Figure 52

Figure 1. Non-Inverting Small−Signal Frequency Response

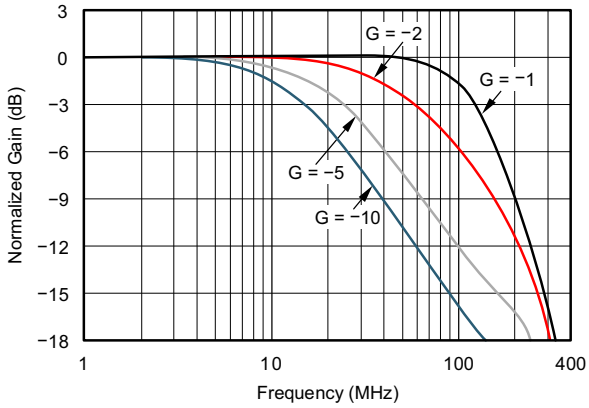

V_O = 0.2V_{PP} R_L = 150 Ω

Figure 2. Inverting Small−Signal Frequency Response

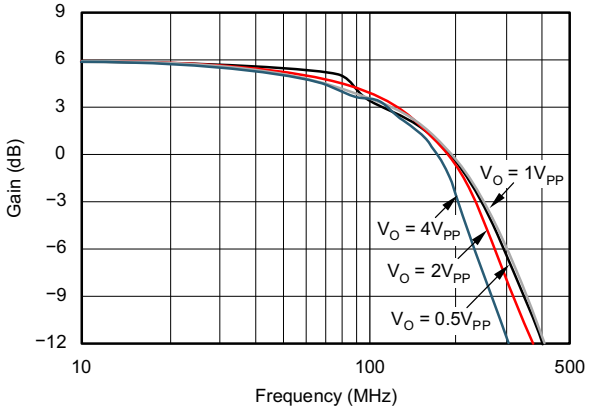

G = +2V/V R_L = 150 Ω See Figure 52

Figure 3. Non-Inverting Large−Signal Frequency Response

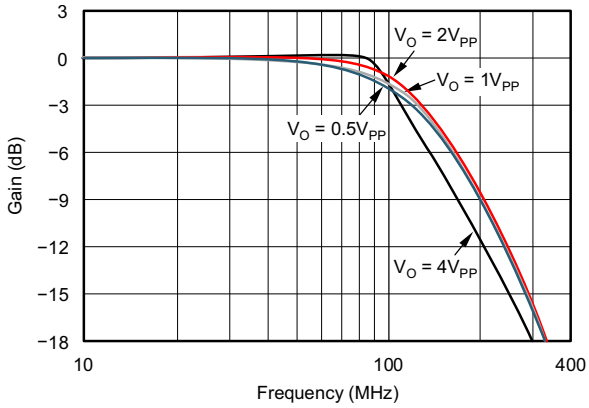

G = -1V/V R_L = 150 Ω

Figure 4. Inverting Large−Signal Frequency Response

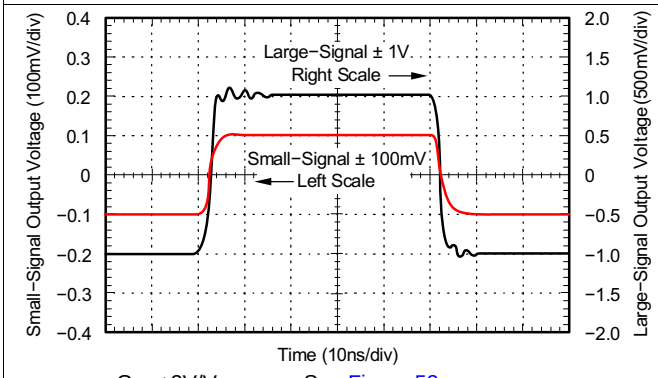

G = +2V/V See Figure 52

Figure 5. Non-Inverting Pulse Response

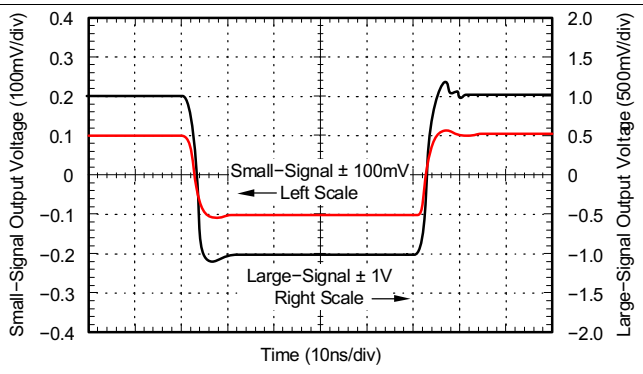

G = -1V/V

Figure 6. Inverting Pulse Response

Copyright © 2014, Texas Instruments Incorporated

Typical Characteristics V_S = ±5V (continued)

At T_A = 25°C, G = +2, R_F = 750Ω, and R_L = 150Ω to GND, unless otherwise noted.

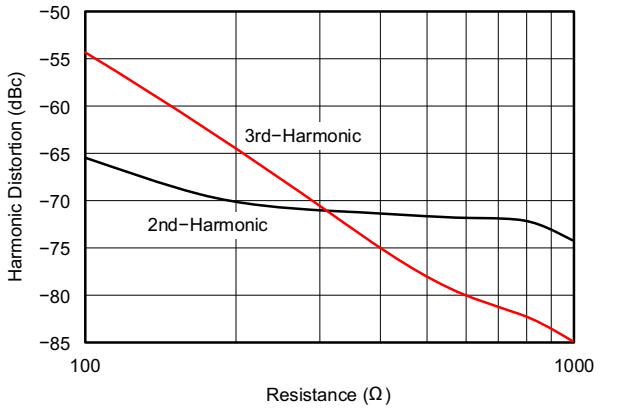

f = 5MHz V_O = 2V_{PP} G = +2V/V

See Figure 52

Figure 7. Harmonic Distortion vs Load Resistance

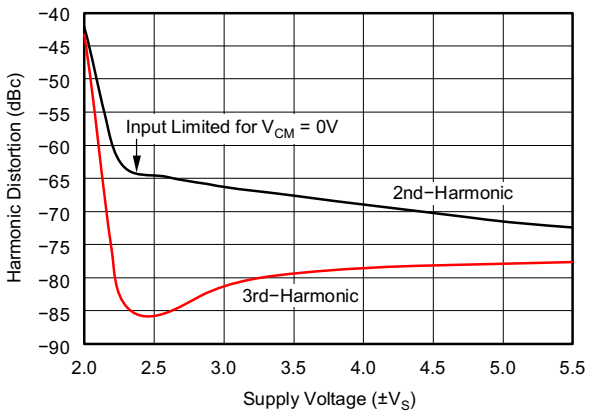

V_O = 2V_{PP} R_L = 500Ω G = +2V/V

See Figure 52

Figure 8. 5MHz Harmonic Distortion vs Supply Voltage

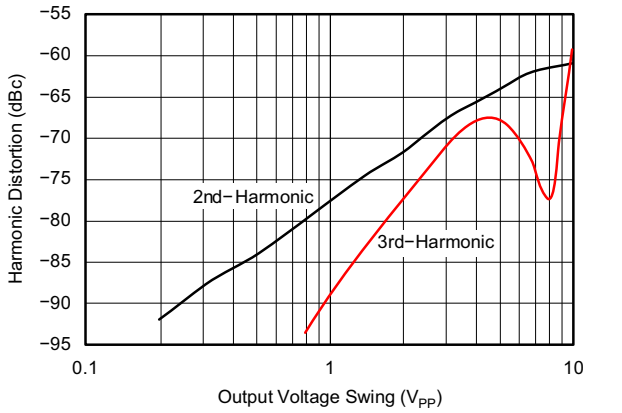

f = 5MHz R_L = 500Ω G = +2V/V

See Figure 52

Figure 9. Harmonic Distortion vs Output Voltage

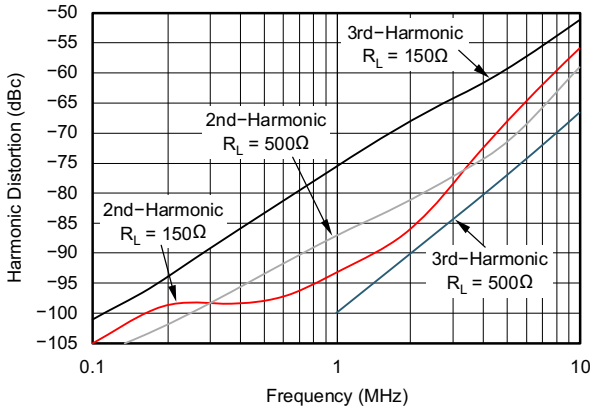

V_O = 2V_{PP} G = +2V/V See Figure 52

Figure 10. Harmonic Distortion vs Frequency

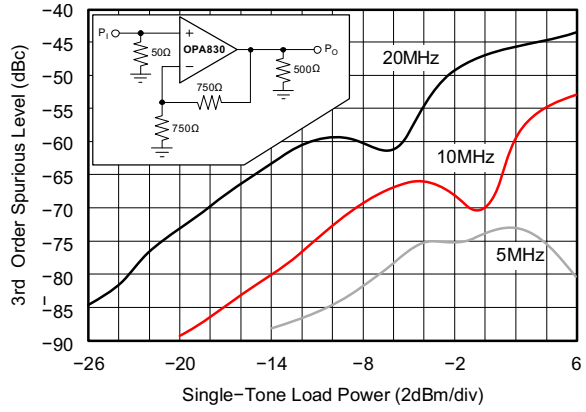

Figure 11. Two−Tone, 3rd−Order Intermodulation Spurious

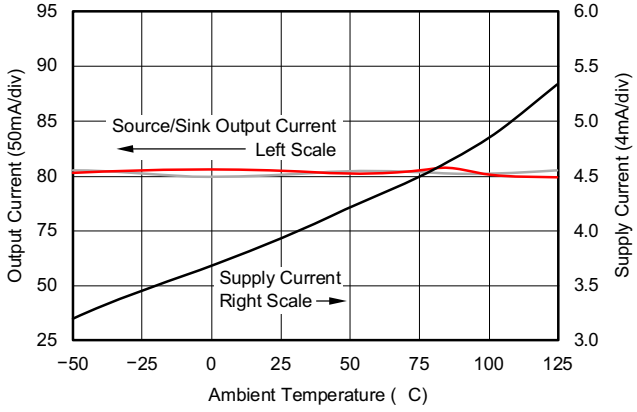

Figure 12. Supply and Output Current vs Temperature

Typical Characteristics V_S = ±5V (continued)

At T_A = 25°C, G = +2, R_F = 750Ω, and R_L = 150Ω to GND, unless otherwise noted.

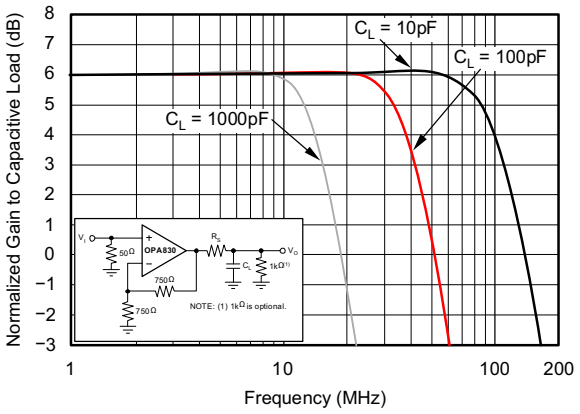

Figure 13. Frequency Response vs Capacitive Load

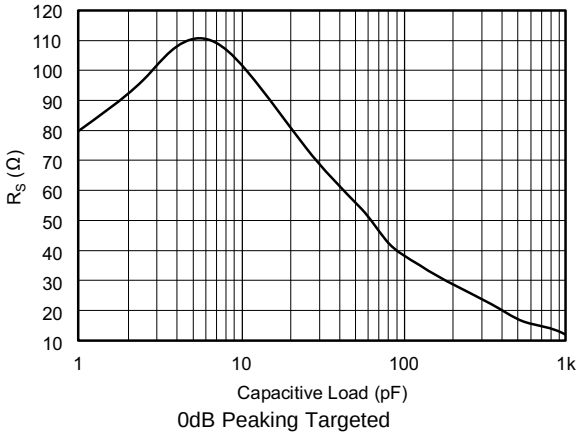

Figure 14. Recommended R_S vs Capacitive Load

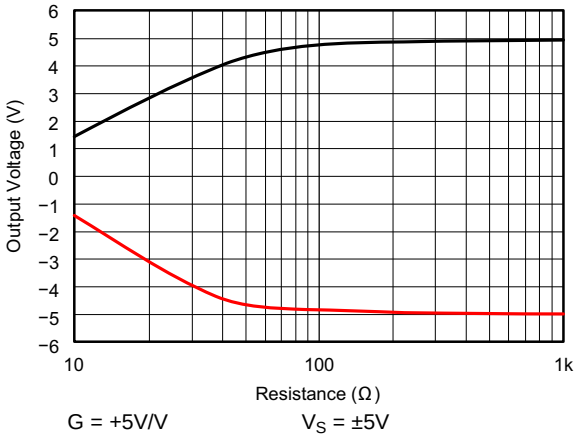

Figure 15. Output Swing vs Load Resistance

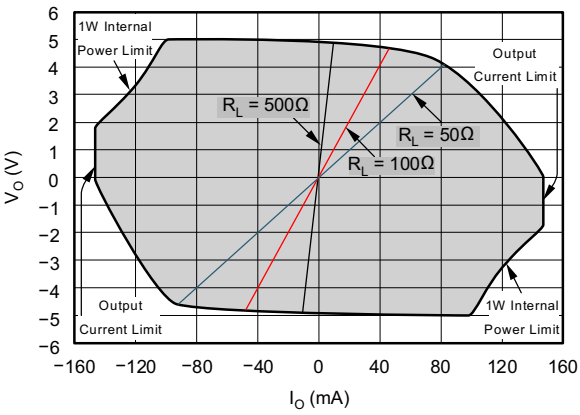

Figure 16. Output Voltage and Current Limitations

Copyright © 2014, Texas Instruments Incorporated

6.8 Typical Characteristics V_S = ±5V, Differential Configuration

At T_A = 25°C, G = +2, R_F = 604Ω, and R_L = 500Ω to GND, unless otherwise noted.

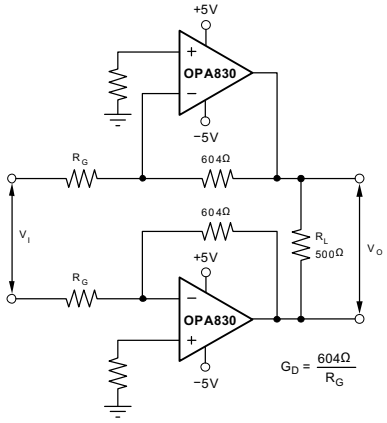

Figure 17. Test Circuit

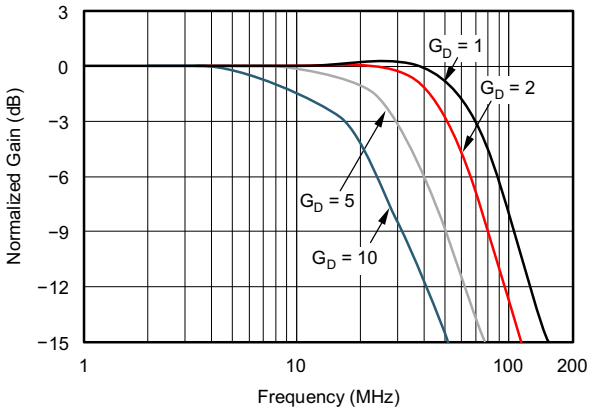

Figure 18. Differential Small−Signal Frequency Response

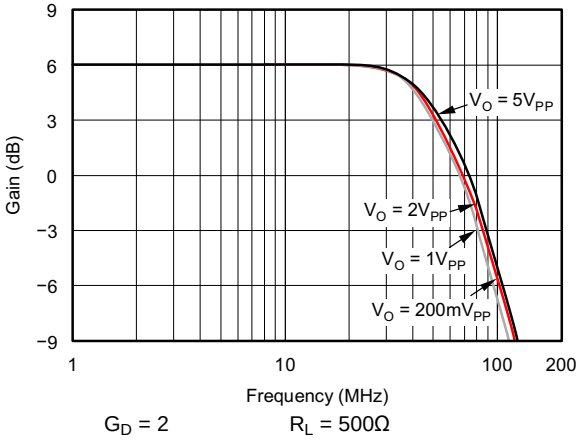

Figure 19. Differential Large−Signal Frequency Response

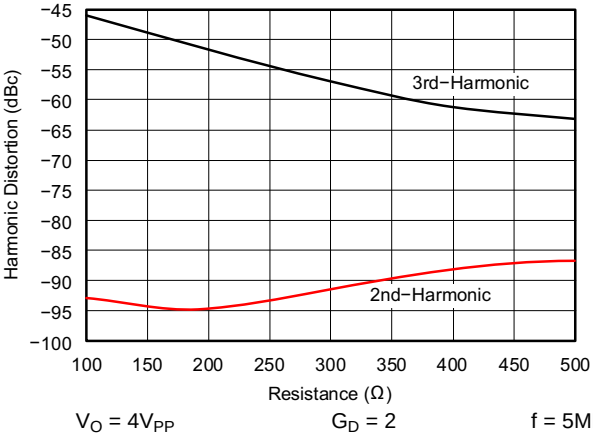

Figure 20. Differential Distortion vs Load Resistance

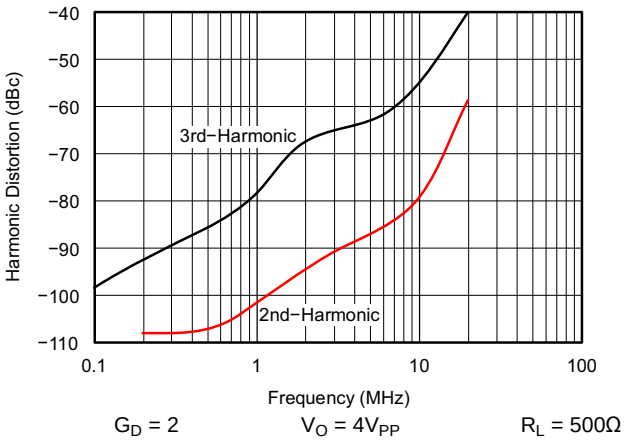

Figure 21. Differential Distortion vs Frequency

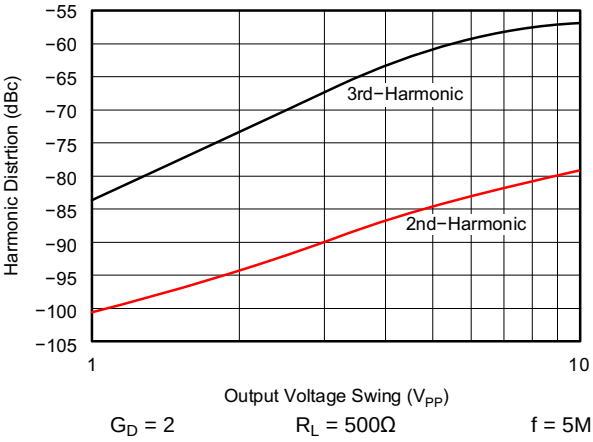

Figure 22. Differential Distortion vs Output Voltage

Copyright © 2014, Texas Instruments Incorporated

6.9 Typical Characteristics V_S = +5V

At T_A = 25°C, G = +2, R_F = 750Ω, and R_L = 150Ω to V_S/2 and input V_{CM} = 2.5V, unless otherwise noted.

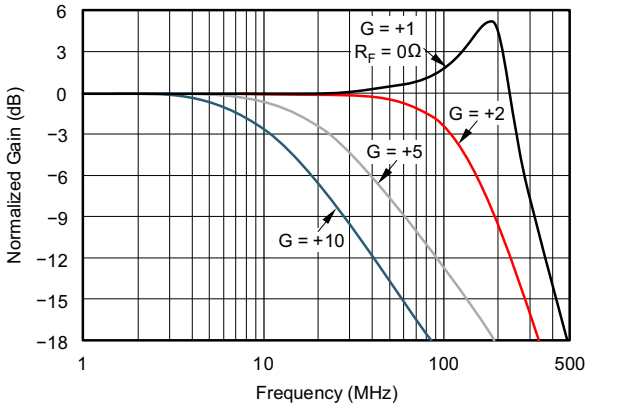

V_O = 0.2V_{PP} R_L = 150Ω See Figure 51

Figure 23. Non-Inverting Small−Signal Frequency Response

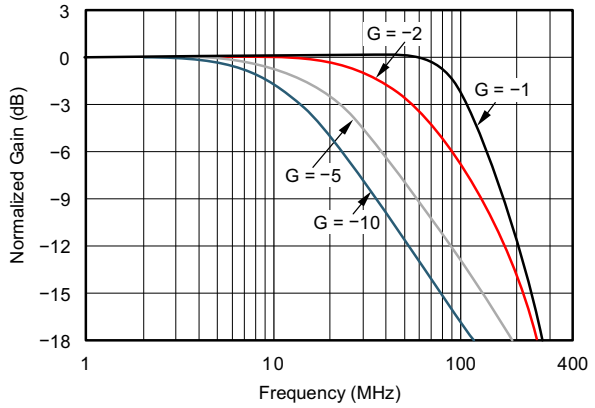

V_O = 0.2V_{PP} R_L = 150Ω See Figure 56

Figure 24. Inverting Small−Signal Frequency Response

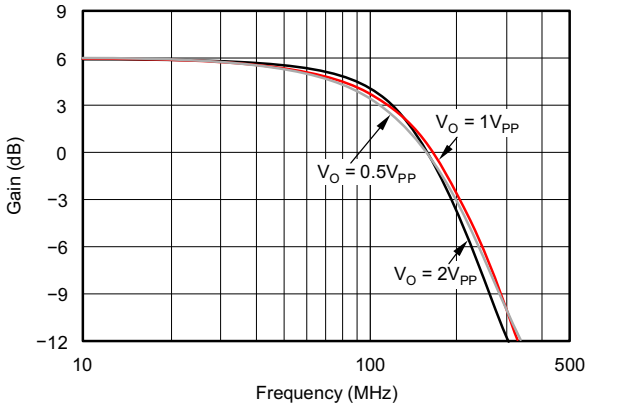

G = +2V/V R_L = 150Ω See Figure 51

Figure 25. Non-Inverting Large−Signal Frequency Response

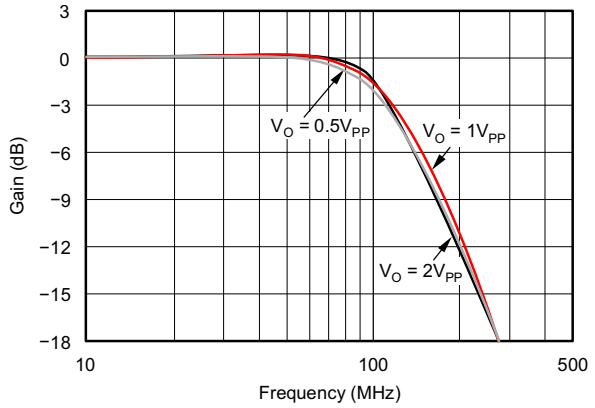

G = -1V/V R_L = 150Ω See Figure 56

Figure 26. Inverting Large−Signal Frequency Response

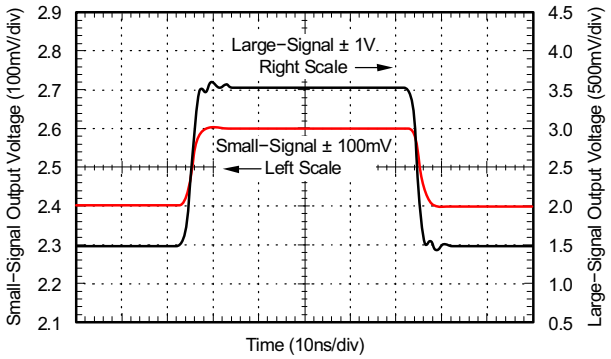

G = +2V/V See Figure 51

Figure 27. Non-Inverting Pulse Response

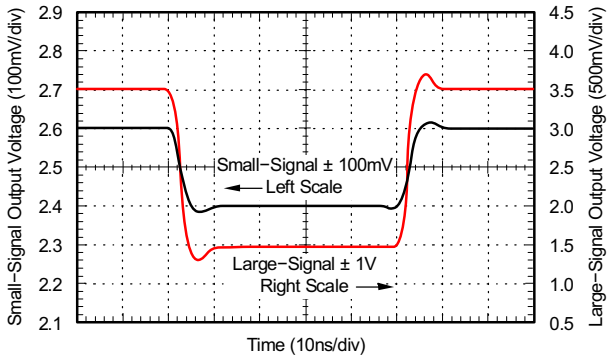

G = -1V/V

Figure 28. Inverting Pulse Response

Copyright © 2014, Texas Instruments Incorporated

Typical Characteristics V_S = +5V (continued)

At T_A = 25°C, G = +2, R_F = 750Ω, and R_L = 150Ω to V_S/2 and input V_{CM} = 2.5V, unless otherwise noted.

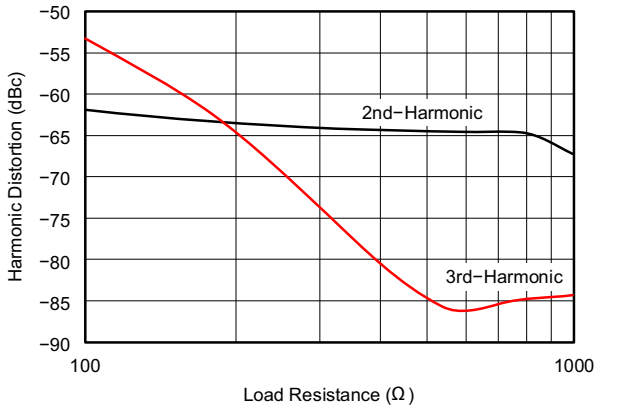

f = 5MHz V_O = 2V_{PP} G = +2V/V

See Figure 51

Figure 29. Harmonic Distortion vs Load Resistance

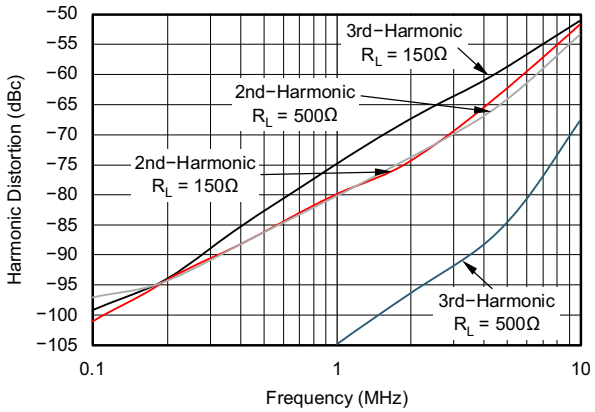

G = +2V/V V_O = 2V_{PP} See Figure 51

Figure 30. Harmonic Distortion vs Frequency

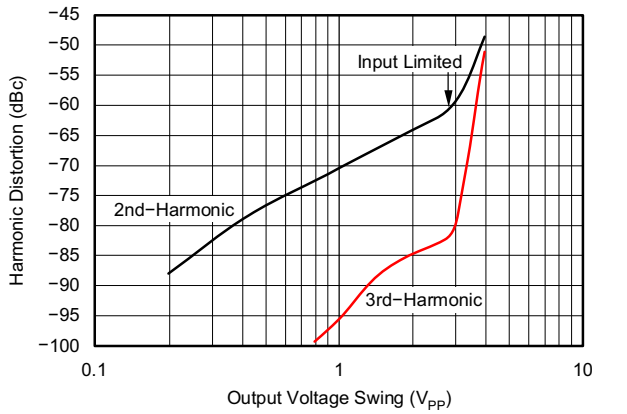

f = 5MHz R_L = 500Ω G = +2V/V

See Figure 51

Figure 31. Harmonic Distortion vs Output Voltage

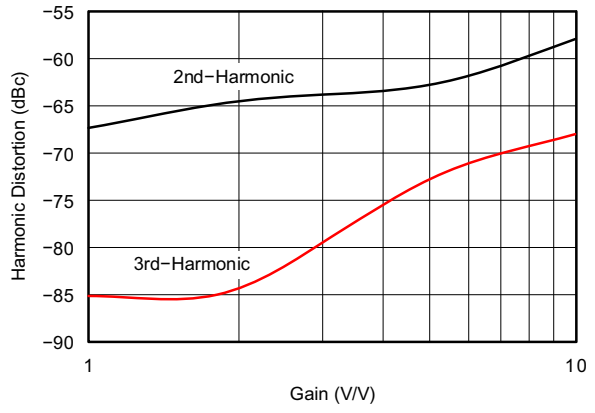

f = 5MHz R_L = 500Ω V_O = 2V_{PP}

See Figure 51

Figure 32. Harmonic Distortion vs Non-nverting Gain

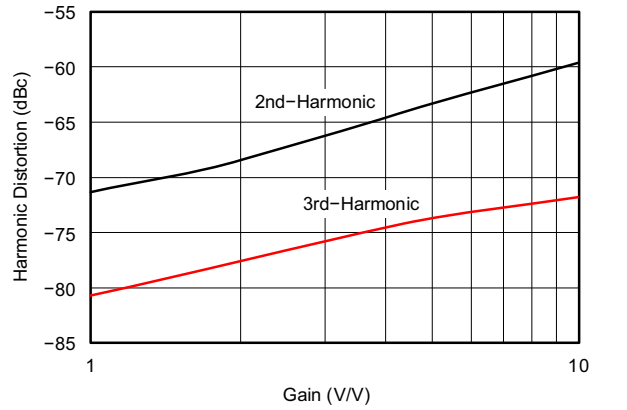

f = 5MHz R_L = 500Ω V_O = 2V_{PP}

Figure 33. Harmonic Distortion vs Inverting Gain

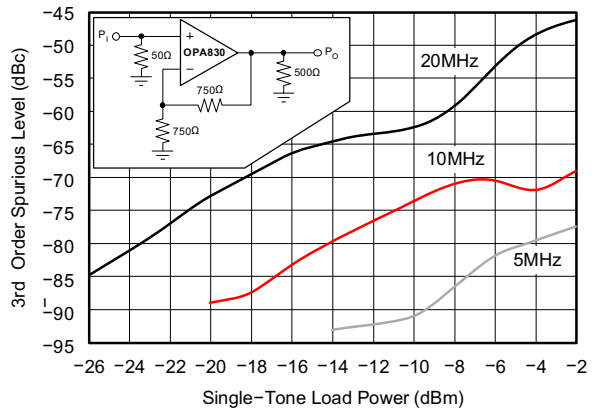

Figure 34. Two−Tone, 3rd−Order Intermodulation Spurious

Typical Characteristics V_S = +5V (continued)

At T_A = 25°C, G = +2, R_F = 750Ω, and R_L = 150Ω to V_S/2 and input V_{CM} = 2.5V, unless otherwise noted.

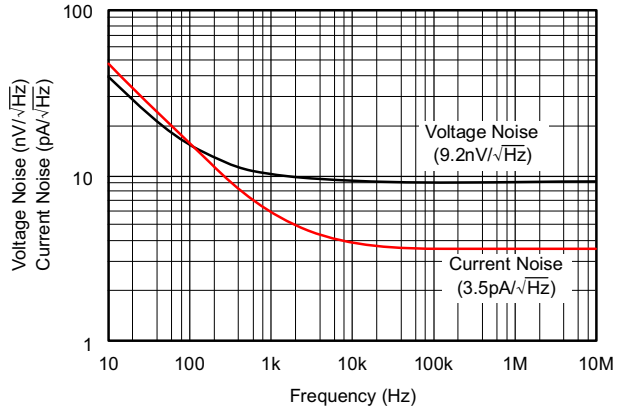

Figure 35. Input Voltage and Current Noise Density

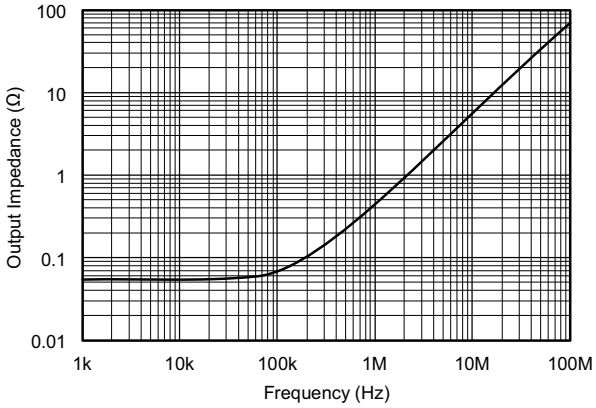

Figure 36. Closed−Loop Output Impedance vs Frequency

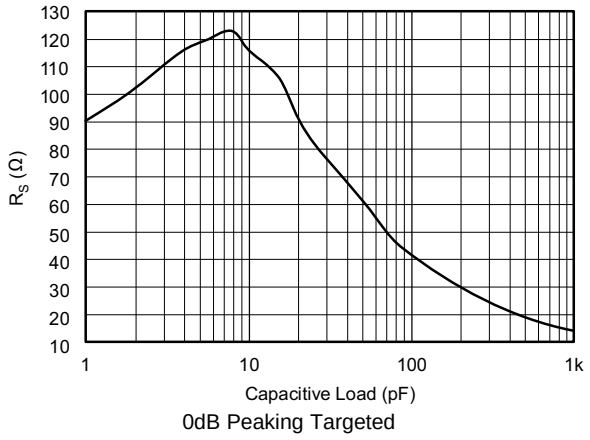

Figure 37. Recommended R_S vs Capacitive Load

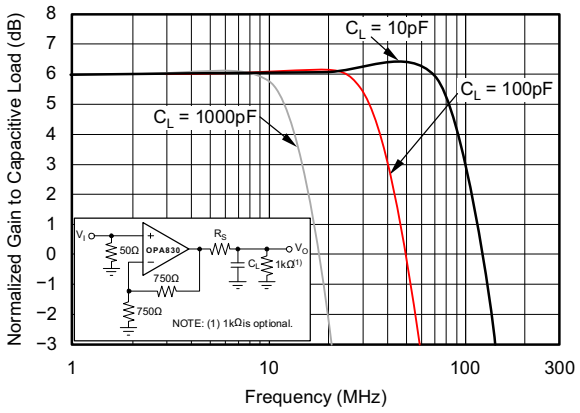

Figure 38. Frequency Response vs Capacitive Load

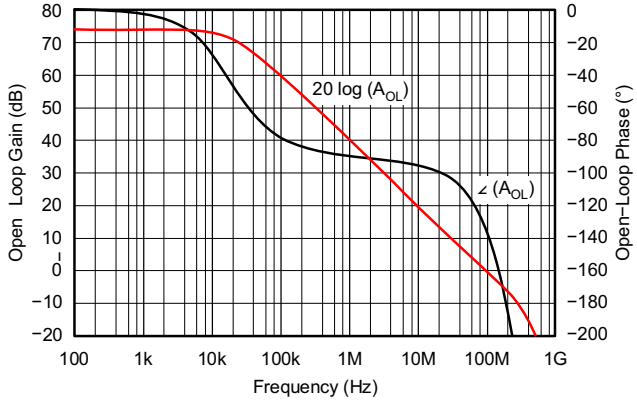

Figure 39. Open−Loop Gain and Phase

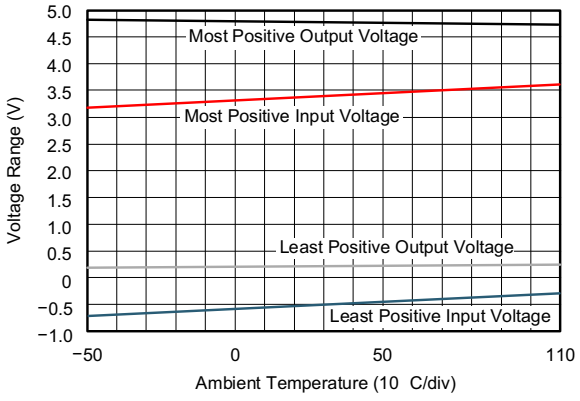

Figure 40. Voltage Ranges vs Temperature

Copyright © 2014, Texas Instruments Incorporated

Typical Characteristics V_S = +5V (continued)

At T_A = 25°C, G = +2, R_F = 750Ω, and R_L = 150Ω to V_S/2 and input V_{CM} = 2.5V, unless otherwise noted.

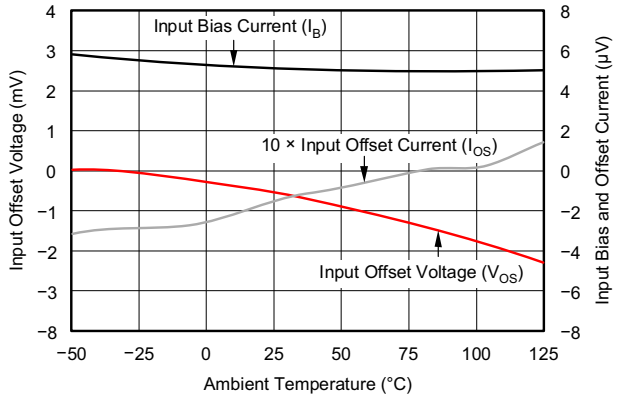

Figure 41. Typical DC Drift Over Temperature

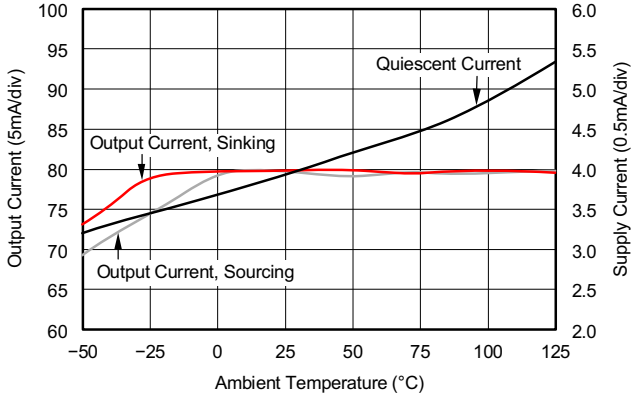

Figure 42. Supply and Output Current vs Temperature

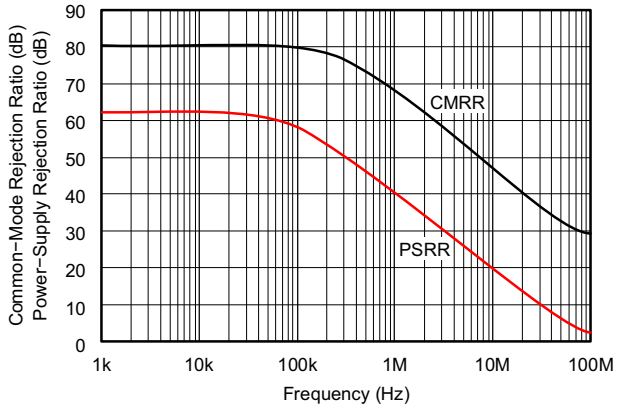

Figure 43. CMRR and PSRR vs Frequency

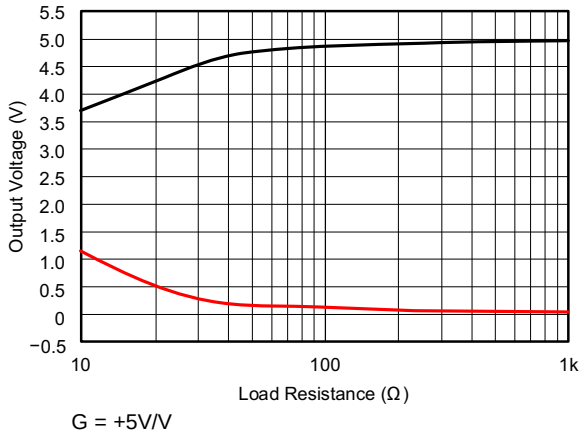

Figure 44. Output Swing vs Load Resistance

6.10 Typical Characteristics V_S = +5V, Differential Configuration

At T_A = 25°C, G = +2, R_F = 604Ω, and R_L = 500Ω differential, unless otherwise noted.

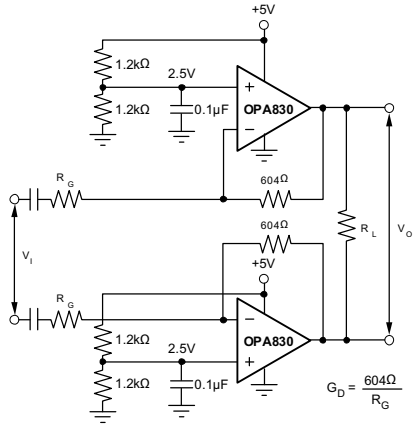

Figure 45. Test Circuit

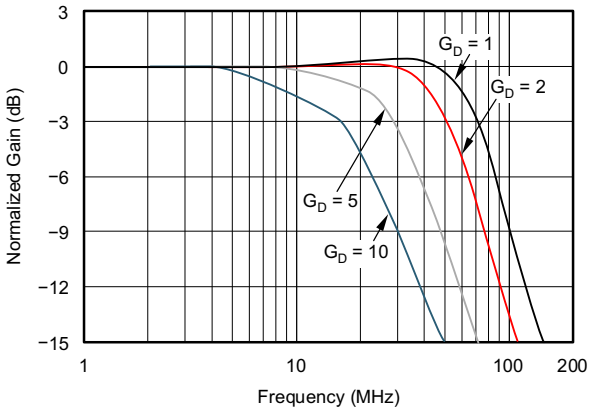

Figure 46. Differential Small−Signal Frequency Response

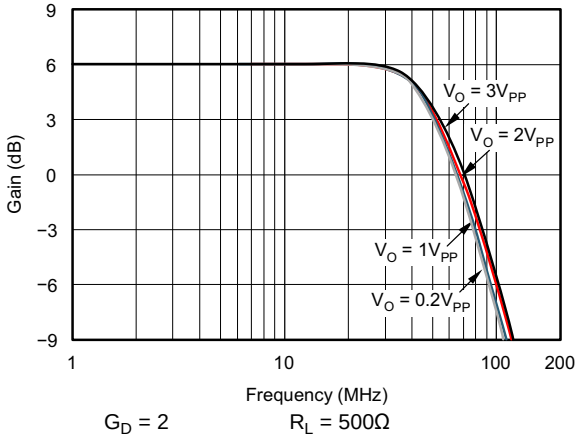

Figure 47. Differential Large−Signal Frequency Response

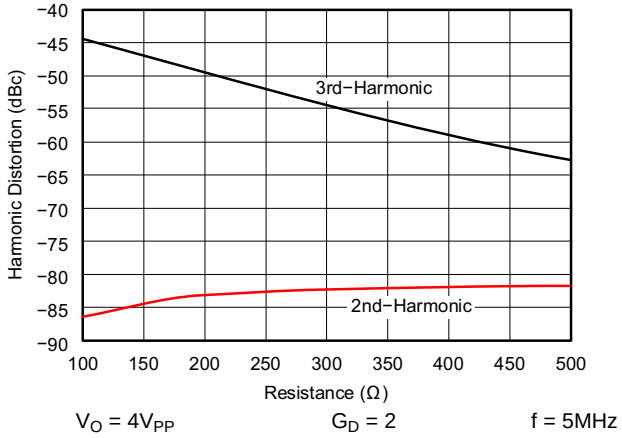

Figure 48. Differential Distortion vs Load Resistance

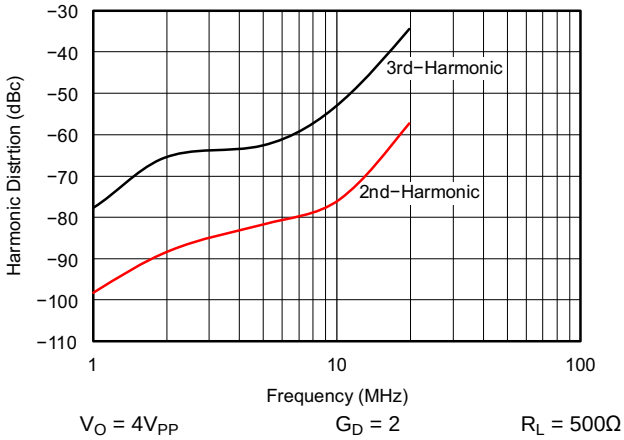

Figure 49. Differential Distortion vs Frequency

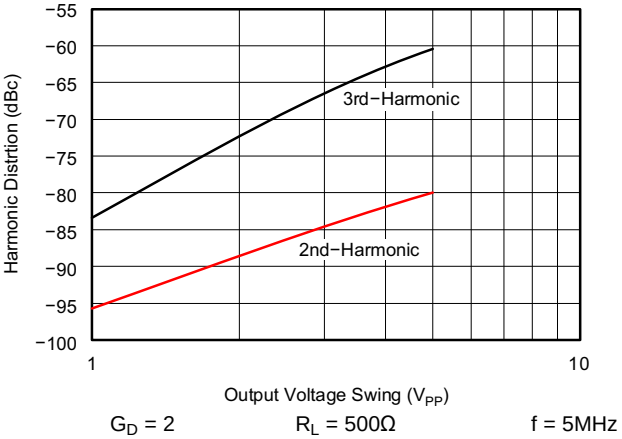

Figure 50. Differential Distortion vs Output Voltage

Copyright © 2014, Texas Instruments Incorporated

7 Detailed Description

7.1 Overview

The OPA830 is a unity-gain stable, very high-speed voltage-feedback op amp designed for single-supply operation (+5V to +10V). The input stage supports input voltages below ground and to within 1.7V of the positive supply. The complementary common-emitter output stage provides an output swing to within 25mV of ground and the positive supply. The OPA830 is compensated to provide stable operation with a wide range of resistive loads.

7.2 Functional Block Diagram

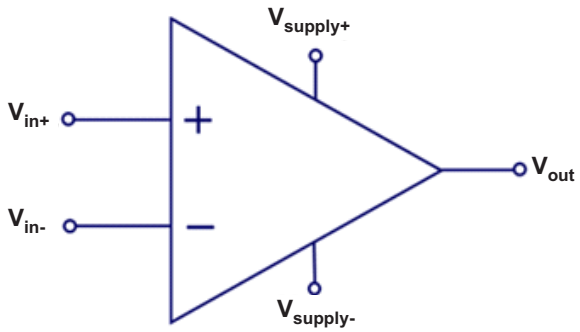

7.3 Feature Description

The OPA830 is a low-power, single-supply, wideband, voltage-feedback amplifier designed to operate on a single +5V supply. Operation on ±5V or +10V supplies is also supported. The input range extends below the negative supply and to within 1.7V of the positive supply. Using complementary common-emitter outputs provides an output swing to within 25mV of either supply while driving 150Ω. High output drive current (±80mA) and low differential gain and phase errors also make them ideal for single-supply consumer video products.

Copyright © 2014, Texas Instruments Incorporated

8 Applications and Implementation

8.1 Application Information

The OPA830 is a unity-gain stable, very high-speed voltage-feedback operational amplifier designed for single-supply operation (+5V to +10V). The input stage supports input voltages below ground and to within 1.7V of the positive supply. The complementary common-emitter output stage provides an output swing to within 25mV of ground and the positive supply. The OPA830 is compensated to provide stable operation with a wide range of resistive loads.

8.2 Typical Applications

8.2.1 Wideband Voltage-Feedback Operation

Figure 51 shows the AC-coupled, gain of +2 configuration used for the +5V Specifications and Typical Characteristic Curves. For test purposes, the input impedance is set to 50Ω with a resistor to ground. Voltage swings reported in the Electrical Characteristics are taken directly at the input and output terminals. For the circuit of Figure 51, the total effective load on the output at high frequencies is 150Ω || 1500Ω. The 1.5kΩ resistors at the non-inverting input provide the common-mode bias voltage. Their parallel combination equals the DC resistance at the inverting input (R_F), reducing the DC output offset due to input bias current.

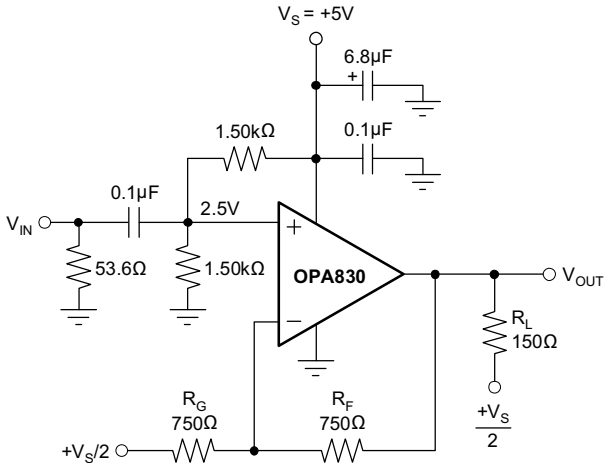

Figure 51. AC-Coupled, G = +2, +5V Single-Supply Specification and Test Circuit

Figure 52 shows the DC-coupled, gain of +2, dual power-supply circuit configuration used as the basis of the ±5V Electrical Characteristics and Typical Characteristics. For test purposes, the input impedance is set to 50Ω with a resistor to ground and the output impedance is set to 150Ω with a series output resistor. Voltage swings reported in the specifications are taken directly at the input and output terminals. For the circuit of Figure 52, the total effective load will be 150Ω || 1.5kΩ. Two optional components are included in Figure 52. An additional resistor (348Ω) is included in series with the non-inverting input. Combined with the 25Ω DC source resistance looking back towards the signal generator, this gives an input bias current cancelling resistance that matches the 375Ω source resistance seen at the inverting input (see the DC Accuracy and Offset Control section). In addition to the usual power-supply decoupling capacitors to ground, a 0.01µF capacitor is included between the two power-supply terminals. In practical PC board layouts, this optional capacitor will typically improve the 2nd-harmonic distortion performance by 3dB to 6dB.

Copyright © 2014, Texas Instruments Incorporated

Typical Applications (continued)

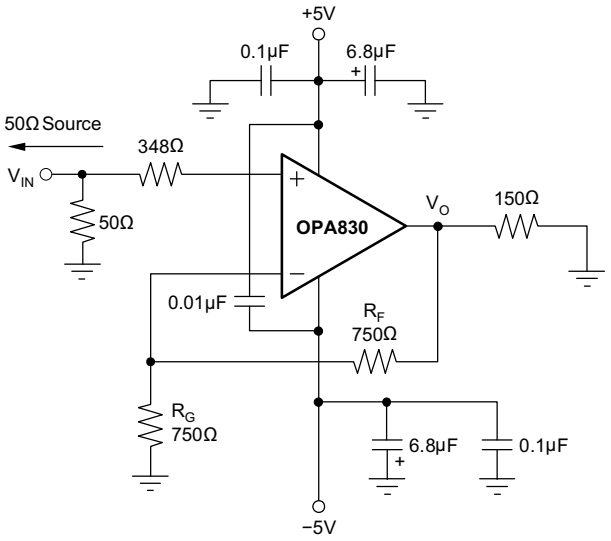

Figure 52. DC-Coupled, G = +2, Bipolar Supply Specification and Test Circuit

8.2.1.1 Single-Supply ADC Interface

The ADC interface on the front page shows a DC-coupled, single-supply ADC driver circuit. Its large input and output voltage ranges and low distortion support converters such as the THS1040 shown in the figure on page 1. The input level-shifting circuitry was designed so that VIN can be between 0V and 0.5V, while delivering an output voltage of 1V to 2V for the THS1040.

8.2.1.2 DC Level-Shifting

Figure 53 shows a DC-coupled non-inverting amplifier that level-shifts the input up to accommodate the desired output voltage range. Given the desired signal gain (G), and the amount V_{OUT} needs to be shifted up (ΔV_{OUT}) when V_{IN} is at the center of its range, the following equations give the resistor values that produce the desired performance. Assume that R_4 is between 200Ω and 1.5kΩ.

$$NG = G + V_{OUT}/V_S \quad (1)$$

$$R_1 = R_4/G \quad (2)$$

$$R_2 = R_4/(NG - G) \quad (3)$$

$$R_3 = R_4/(NG - 1) \quad (4)$$

Where:

$$NG = 1 + R_4/R_3 \quad (5)$$

$$V_{OUT} = (G)V_{IN} + (NG - G)V_S \quad (6)$$

Make sure that V_{IN} and V_{OUT} stay within the specified input and output voltage ranges.

Typical Applications (continued)

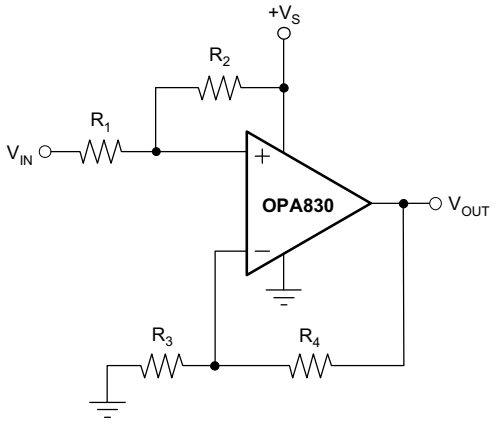

Figure 53. DC Level-Shifting

The circuit on the front page is a good example of this type of application. It was designed to take V_{IN} between 0V and 0.5V and produce V_{OUT} between 1V and 2V when using a +5V supply. This means G = 2.00, and ΔV_{OUT} = 1.50V − G × 0.25V = 1.00V. Plugging these values into the above equations (with R_4 = 750Ω) gives: NG = 2.2, R_1 = 375Ω, R_2 = 3.75kΩ, and R_3 = 625Ω. The resistors were changed to the nearest standard values for the front page circuit.

8.2.1.3 AC-Coupled Output Video Line Driver

Low-power and low-cost video line drivers often buffer digital-to-analog converter (DAC) outputs with a gain of 2 into a doubly-terminated line. Those interfaces typically require a DC blocking capacitor. For a simple solution, that interface often has used a very large value blocking capacitor (220µF) to limit tilt, or SAG, across the frames. One approach to creating a very low high-pass pole location using much lower capacitor values is shown in Figure 54. This circuit gives a voltage gain of 2 at the output terminal with a high-pass pole at 8Hz. Given the 150Ω load, a simple blocking capacitor approach would require a 133µF value. The two much lower valued capacitors give this same low-pass pole using this simple SAG correction circuit of Figure 54.

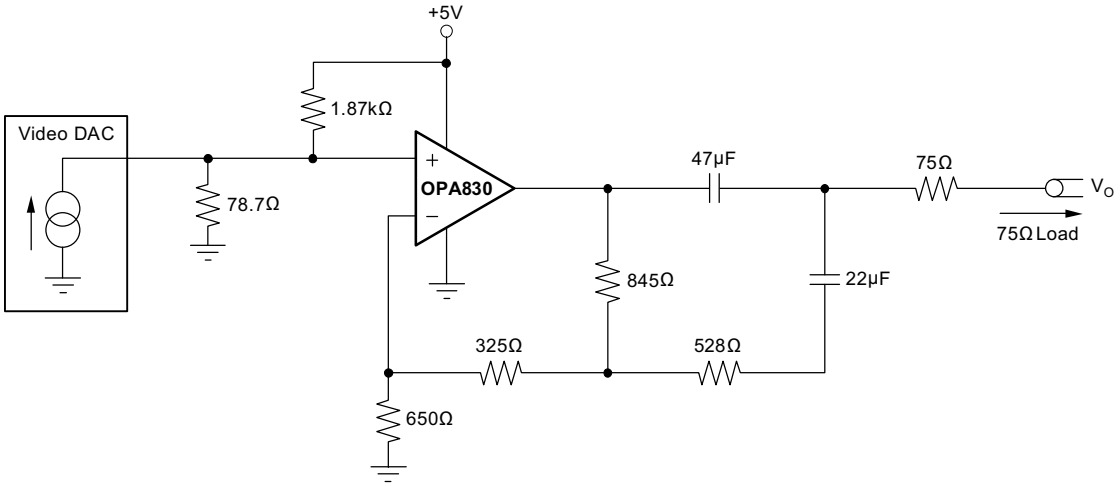

Figure 54. Video Line Driver with SAG Correction

Copyright © 2014, Texas Instruments Incorporated

Typical Applications (continued)

8.2.1.4 Design Requirements

For the non-inverting amplifier with reduced peaking design, the design parameters needed in Figure 59 with noise gain = 2 are listed in Table 1.

Table 1. Design Parameters

DESIGN PARAMETER	EXAMPLE VALUE
R_T	20 Ω
R_F	20 Ω
R_C	40.2 Ω

8.2.1.5 Detailed Design Procedure

8.2.1.5.1 Demonstration Boards

Two printed circuit boards (PCBs) are available to assist in the initial evaluation of circuit performance using the OPA830 in its two package options. Both of these are offered free of charge as unpopulated PCBs, delivered with a user's guide. The summary information for these fixtures is shown in Table 2.

Table 2. Demonstration Fixtures by Package

PRODUCT	PACKAGE	ORDERING NUMBER	LITERATURE NUMBER
OPA830ID	SO-8	DEM-OPA-SO-1A	SBOU009
OPA830IDBV	SOT23-5	DEM-OPA-SOT-1A	SBOU010

The demonstration fixtures can be requested at the Texas Instruments web site (www.ti.com) through the OPA830 product folder.

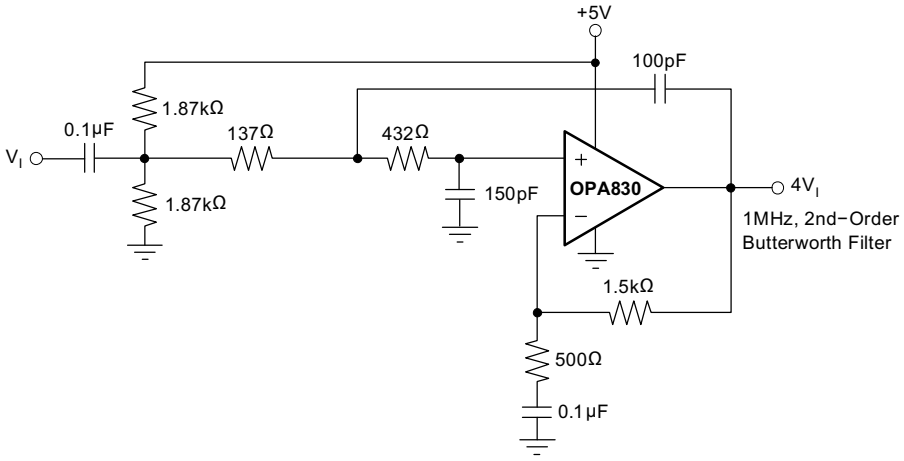

Figure 55. Single-Supply, High-Frequency Active Filter

8.2.1.5.2 Macromodel and Applications Support

Computer simulation of circuit performance using SPICE is often a quick way to analyze the performance of the OPA830 and its circuit designs. This is particularly true for video and RF amplifier circuits where parasitic capacitance and inductance can play a major role on circuit performance. A SPICE model for the OPA830 is available through the product folder on www.ti.com. The applications department is also available for design assistance. These models predict typical small signal AC, transient steps, DC performance, and noise under a wide variety of operating conditions. The models include the noise terms found in the electrical specifications of the data sheet. These models do not attempt to distinguish between the package types in their small-signal AC performance.

Copyright © 2014, Texas Instruments Incorporated

8.2.1.5.3 Operating Suggestions

8.2.1.5.3.1 Optimizing Resistor Values

Since the OPA830 is a unity-gain stable, voltage-feedback op amp, a wide range of resistor values may be used for the feedback and gain setting resistors. The primary limits on these values are set by dynamic range (noise and distortion) and parasitic capacitance considerations. For a non-inverting unity-gain follower application, the feedback connection should be made with a direct short.

Below 200Ω, the feedback network will present additional output loading which can degrade the harmonic distortion performance of the OPA830. Above 1kΩ, the typical parasitic capacitance (approximately 0.2pF) across the feedback resistor may cause unintentional band limiting in the amplifier response.

A good rule of thumb is to target the parallel combination of R_F and R_G (see Figure 52) to be less than about 400Ω. The combined impedance R_F || R_G interacts with the inverting input capacitance, placing an additional pole in the feedback network, and thus a zero in the forward response. Assuming a 2pF total parasitic on the inverting node, holding R_F || R_G < 400Ω will keep this pole above 200MHz. By itself, this constraint implies that the feedback resistor RF can increase to several kΩ at high gains. This is acceptable as long as the pole formed by R_F and any parasitic capacitance appearing in parallel is kept out of the frequency range of interest.

In the inverting configuration, an additional design consideration must be noted. R_G becomes the input resistor and therefore the load impedance to the driving source. If impedance matching is desired, R_G may be set equal to the required termination value. However, at low inverting gains, the resultant feedback resistor value can present a significant load to the amplifier output. For example, an inverting gain of 2 with a 50Ω input matching resistor (R_G) would require a 100Ω feedback resistor, which would contribute to output loading in parallel with the external load. In such a case, it would be preferable to increase both the R_F and R_G values, and then achieve the input matching impedance with a third resistor to ground (see Figure 56). The total input impedance becomes the parallel combination of R_G and the additional shunt resistor.

8.2.1.5.3.2 Bandwidth vs Gain: Non-Inverting Operation

Voltage-feedback op amps exhibit decreasing closed-loop bandwidth as the signal gain is increased. In theory, this relationship is described by the Gain Bandwidth Product (GBP) shown in the specifications. Ideally, dividing GBP by the non-inverting signal gain (also called the Noise Gain, or NG) will predict the closed-loop bandwidth. In practice, this only holds true when the phase margin approaches 90°, as it does in high-gain configurations. At low gains (increased feedback factors), most amplifiers will exhibit a more complex response with lower phase margin. The OPA830 is compensated to give a slightly peaked response in a non-inverting gain of 2 (see Figure 52). This results in a typical gain of +2 bandwidth of 110MHz, far exceeding that predicted by dividing the 110MHz GBP by 2. Increasing the gain will cause the phase margin to approach 90° and the bandwidth to more closely approach the predicted value of (GBP/NG). At a gain of +10, the 11MHz bandwidth shown in the Electrical Characteristics agrees with that predicted using the simple formula and the typical GBP of 110MHz.

Frequency response in a gain of +2 may be modified to achieve exceptional flatness simply by increasing the noise gain to 3. One way to do this, without affecting the +2 signal gain, is to add an 2.55kΩ resistor across the two inputs, as shown in Figure 59. A similar technique may be used to reduce peaking in unity-gain (voltage follower) applications. For example, by using a 750Ω feedback resistor along with a 750Ω resistor across the two op amp inputs, the voltage follower response will be similar to the gain of +2 response of . Further reducing the value of the resistor across the op amp inputs will further dampen the frequency response due to increased noise gain. The OPA830 exhibits minimal bandwidth reduction going to single-supply (+5V) operation as compared with ±5V. This minimal reduction is because the internal bias control circuitry retains nearly constant quiescent current as the total supply voltage between the supply terminals is changed.

8.2.1.5.3.3 Inverting Amplifier Operation

All of the familiar op amp application circuits are available with the OPA830 to the designer. See Figure 56 for a typical inverting configuration where the I/O impedances and signal gain from Figure 51 are retained in an inverting circuit configuration. Inverting operation is one of the more common requirements and offers several performance benefits. It also allows the input to be biased at V_S/2 without any headroom issues. The output voltage can be independently moved to be within the output voltage range with coupling capacitors, or bias adjustment resistors.

Copyright © 2014, Texas Instruments Incorporated

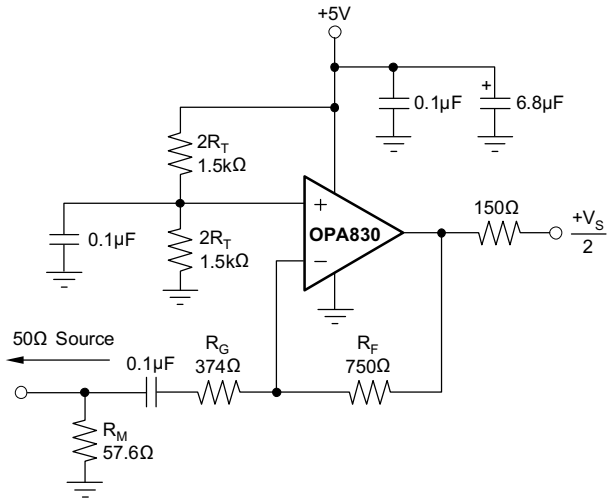

Figure 56. AC-Coupled, G = –2 Example Circuit

In the inverting configuration, three key design considerations must be noted. The first consideration is that the gain resistor (R_G) becomes part of the signal channel input impedance. If input impedance matching is desired (which is beneficial whenever the signal is coupled through a cable, twisted pair, long PC board trace, or other transmission line conductor), R_G may be set equal to the required termination value and R_F adjusted to give the desired gain. This is the simplest approach and results in optimum bandwidth and noise performance.

However, at low inverting gains, the resulting feedback resistor value can present a significant load to the amplifier output. For an inverting gain of 2, setting R_G to 50Ω for input matching eliminates the need for R_M but requires a 100Ω feedback resistor. This configuration has the interesting advantage of the noise gain becoming equal to 2 for a 50Ω source impedance—the same as the non-inverting circuits considered above. The amplifier output will now see the 100Ω feedback resistor in parallel with the external load. In general, the feedback resistor should be limited to the 200Ω to 1.5kΩ range. In this case, it is preferable to increase both the R_F and R_G values, as shown in Figure 56, and then achieve the input matching impedance with a third resistor (R_M) to ground. The total input impedance becomes the parallel combination of R_G and R_M.

The second major consideration, touched on in the previous paragraph, is that the signal source impedance becomes part of the noise gain equation and hence influences the bandwidth. For the example in Figure 56, the R_M value combines in parallel with the external 50Ω source impedance (at high frequencies), yielding an effective driving impedance of 50Ω || 57.6Ω = 26.8Ω. This impedance is added in series with R_G for calculating the noise gain. The resulting noise gain is 2.87 for Figure 56, as opposed to only 2 if R_M could be eliminated as discussed above. The bandwidth will therefore be lower for the gain of −2 circuit of Figure 56 (NG = +2.87) than for the gain of +2 circuit of Figure 51.

The third important consideration in inverting amplifier design is setting the bias current cancellation resistors on the non-inverting input (a parallel combination of R_T = 750Ω). If this resistor is set equal to the total DC resistance looking out of the inverting node, the output DC error, due to the input bias currents, will be reduced to (Input Offset Current) times R_F. With the DC blocking capacitor in series with R_G, the DC source impedance looking out of the inverting mode is simply R_F = 750Ω for Figure 56. To reduce the additional high-frequency noise introduced by this resistor and power-supply feed-through, R_T is bypassed with a capacitor.

8.2.1.5.3.4 Output Current and Voltages

The OPA830 provides outstanding output voltage capability. For the +5V supply, under no-load conditions at +25°C, the output voltage typically swings closer than 90mV to either supply rail.

Copyright © 2014, Texas Instruments Incorporated

The minimum specified output voltage and current specifications over temperature are set by worst-case simulations at the cold temperature extreme. Only at cold startup will the output current and voltage decrease to the numbers shown in the ensured tables. As the output transistors deliver power, their junction temperatures will increase, decreasing their V_{BE}s (increasing the available output voltage swing) and increasing their current gains (increasing the available output current). In steady-state operation, the available output voltage and current will always be greater than that shown in the over-temperature specifications, since the output stage junction temperatures will be higher than the minimum specified operating ambient.

To maintain maximum output stage linearity, no output short-circuit protection is provided. This will not normally be a problem, since most applications include a series matching resistor at the output that will limit the internal power dissipation if the output side of this resistor is shorted to ground. However, shorting the output terminal directly to the adjacent positive power-supply terminal (8-terminal packages) will, in most cases, destroy the amplifier. If additional short-circuit protection is required, consider a small series resistor in the power-supply leads. This will reduce the available output voltage swing under heavy output loads.

8.2.1.5.3.5 Driving Capacitive Loads

One of the most demanding and yet very common load conditions for an op amp is capacitive loading. Often, the capacitive load is the input of an ADC—including additional external capacitance which may be recommended to improve ADC linearity. A high-speed, high open-loop gain amplifier like the OPA830 can be very susceptible to decreased stability and closed-loop response peaking when a capacitive load is placed directly on the output terminal. When the primary considerations are frequency response flatness, pulse response fidelity, and/or distortion, the simplest and most effective solution is to isolate the capacitive load from the feedback loop by inserting a series isolation resistor between the amplifier output and the capacitive load

The Typical Characteristic curves show the recommended RS versus capacitive load and the resulting frequency response at the load. Parasitic capacitive loads greater than 2pF can begin to degrade the performance of the OPA830. Long PC board traces, unmatched cables, and connections to multiple devices can easily exceed this value. Always consider this effect carefully, and add the recommended series resistor as close as possible to the output terminal (see the Layout Guidelines section).

The criterion for setting this R_S resistor is a maximum bandwidth, flat frequency response at the load. For a gain of +2, the frequency response at the output terminal is already slightly peaked without the capacitive load, requiring relatively high values of R_S to flatten the response at the load. Increasing the noise gain will also reduce the peaking (see Figure 59).

8.2.1.5.3.6 Distortion Performance

The OPA830 provides good distortion performance into a 150Ω load. Relative to alternative solutions, it provides exceptional performance into lighter loads and/or operating on a single +5V supply. Generally, until the fundamental signal reaches very high frequency or power levels, the 2nd-harmonic will dominate the distortion with a negligible 3rd-harmonic component. Focusing then on the 2nd-harmonic, increasing the load impedance improves distortion directly. Remember that the total load includes the feedback network; in the non-inverting configuration (see Figure 52) this is sum of $R_F + R_G$, while in the inverting configuration, only R_F needs to be included in parallel with the actual load. Running differential suppresses the 2nd-harmonic, as shown in the differential typical characteristic curves.

8.2.1.5.3.7 Noise Performance

High slew rate, unity-gain stable, voltage-feedback op amps usually achieve their slew rate at the expense of a higher input noise voltage. The 9.2nV/√Hz input voltage noise for the OPA830 however, is much lower than comparable amplifiers. The input-referred voltage noise and the two input-referred current noise terms (2.8pA/√Hz) combine to give low output noise under a wide variety of operating conditions. Figure 57 shows the op amp noise analysis model with all the noise terms included. In this model, all noise terms are taken to be noise voltage or current density terms in either nV/√Hz or pA/√Hz.

Copyright © 2014, Texas Instruments Incorporated

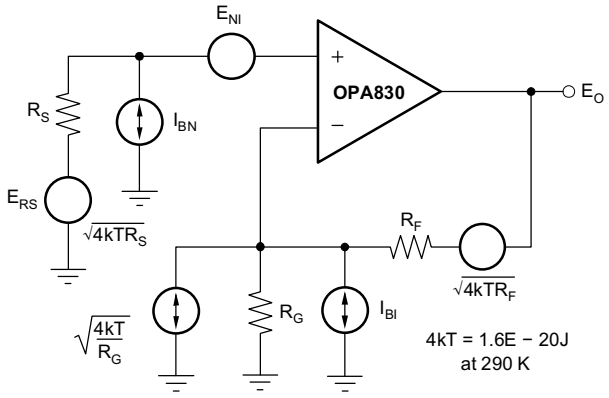

Figure 57. Noise Analysis Model

The total output spot noise voltage can be computed as the square root of the sum of all squared output noise voltage contributors. Equation 7 shows the general form for the output noise voltage using the terms shown in Figure 57:

$$E_O = \sqrt{\left(E_{NI}^2 + \left(I_{BN}R_S\right)^2 + 4kTR_S\right)NG^2 + \left(I_{BI}R_F\right)^2 + 4kTR_FNG} \quad (7)$$

Dividing this expression by the noise gain (NG = (1 + R_F/R_G)) will give the equivalent input-referred spot noise voltage at the non-inverting input, as shown in Equation 8:

$$E_N = \sqrt{E_{NI}^2 + \left(I_{BN}R_S\right)^2 + 4kTR_S + \left(\frac{I_{BI}R_F}{NG}\right)^2 + \frac{4kTR_F}{NG}} \quad (8)$$

Evaluating these two equations for the circuit and component values shown in Figure 51 will give a total output spot noise voltage of 19.3nV/√Hz and a total equivalent input spot noise voltage of 9.65nV/√Hz. This is including the noise added by the resistors. This total input-referred spot noise voltage is not much higher than the 9.2nV/√Hz specification for the op amp voltage noise alone.

8.2.1.5.4 DC Accuracy and Offset Control

The balanced input stage of a wideband voltage-feedback op amp allows good output DC accuracy in a wide variety of applications. The power-supply current trim for the OPA830 gives even tighter control than comparable products. Although the high-speed input stage does require relatively high input bias current (typically 5μA out of each input terminal), the close matching between them may be used to reduce the output DC error caused by this current. This is done by matching the DC source resistances appearing at the two inputs. Evaluating the configuration of Figure 52 (which has matched DC input resistances), using worst-case +25°C input offset voltage and current specifications, gives a worst-case output offset voltage equal to:

(NG = non-inverting signal gain at DC) ± (NG × $V_{OS(MAX)}$) + (R_F × $I_{OS(MAX)}$) = ±(2 × 7mV) × (375Ω × 1μA) = ±14.38mV (9)

A fine-scale output offset null, or DC operating point adjustment, is often required. Numerous techniques are available for introducing DC offset control into an op amp circuit. Most of these techniques are based on adding a DC current through the feedback resistor. In selecting an offset trim method, one key consideration is the impact on the desired signal path frequency response. If the signal path is intended to be non-inverting, the offset control is best applied as an inverting summing signal to avoid interaction with the signal source. If the signal path is intended to be inverting, applying the offset control to the non-inverting input may be considered. Bring the DC offsetting current into the inverting input node through resistor values that are much larger than the signal path resistors. This will insure that the adjustment circuit has minimal effect on the loop gain and hence the frequency response.

8.2.1.5.5 Thermal Analysis

Maximum desired junction temperature will set the maximum allowed internal power dissipation, as described below. In no case should the maximum junction temperature be allowed to exceed 150°C.

Copyright © 2014, Texas Instruments Incorporated

Operating junction temperature (T_J) is given by $T_A + P_D \times \theta_{JA}$. The total internal power dissipation (P_D) is the sum of quiescent power (P_{DQ}) and additional power dissipated in the output stage (P_{DL}) to deliver load power. Quiescent power is simply the specified no-load supply current times the total supply voltage across the part. P_{DL} will depend on the required output signal and load; though, for resistive loads connected to mid-supply ($V_S/2$), P_{DL} is at a maximum when the output is fixed at a voltage equal to $V_S/4$ or $3V_S/4$. Under this condition, $P_{DL} = V_S^2/(16 \times R_L)$, where R_L includes feedback network loading.

Note that it is the power in the output stage, and not into the load, that determines internal power dissipation.

As a worst-case example, compute the maximum T_J using an OPA830 (SOT23-5 package) in the circuit of Figure 51 operating at the maximum specified ambient temperature of 105°C and driving a 150Ω load at mid-supply.

$$P_D = 11V \times 5.5mA + 5^2/(16 \times (150\Omega \parallel 750\Omega)) = 73mW \quad (10)$$

$$\text{Maximum } T_J = 105°C + (73mW \times 218.8°C/W) = 120.9°C \quad (11)$$

Although this is still well below the specified maximum junction temperature, system reliability considerations may require lower ensured junction temperatures. The highest possible internal dissipation will occur if the load requires current to be forced into the output at high output voltages or sourced from the output at low output voltages. This puts a high current through a large internal voltage drop in the output transistors.

8.2.1.6 Application Curve

The input is shifted slightly positive in Figure 54 using the voltage divider from the positive supply. This gives about a 200mV input DC offset that will show up at the output terminal as a 400mV DC offset when the DAC output is at zero current during the sync tip portion of the video signal. This acts to hold the output in its linear operating region. This will pass on any power-supply noise to the output with a gain of approximately −20dB, so good supply decoupling is recommended on the power-supply terminal. Figure 58 shows the frequency response for the circuit of Figure 54. This plot shows the 8Hz low-frequency high-pass pole and a high-end cutoff at approximately 100MHz.

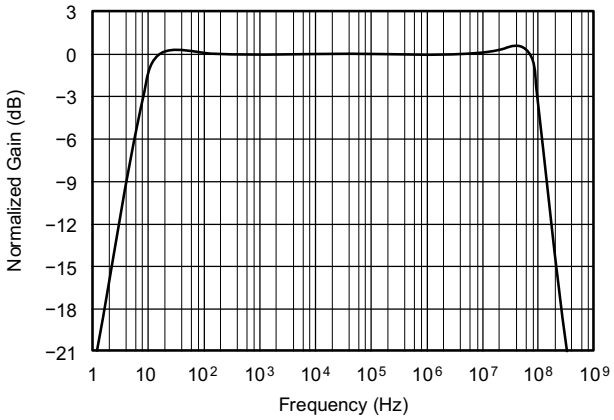

Figure 58. Video Line Driver Response to Matched Load

8.2.2 Non-Inverting Amplifier with Reduced Peaking

Figure 59 shows a non-inverting amplifier that reduces peaking at low gains. The resistor R_C compensates the OPA830 to have higher Noise Gain (NG), which reduces the AC response peaking (typically 5dB at G = +1 without R_C) without changing the DC gain. V_{IN} needs to be a low impedance source, such as an op amp. The resistor values are low to reduce noise. Using both R_T and R_F helps minimize the impact of parasitic impedances.

Copyright © 2014, Texas Instruments Incorporated

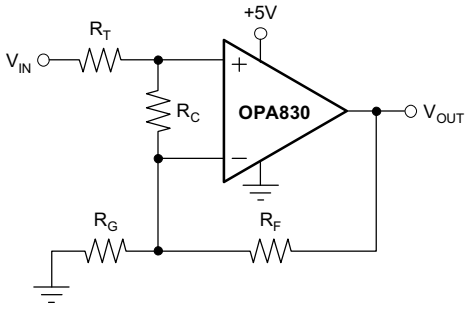

Figure 59. Compensated Non-Inverting Amplifier

The Noise Gain can be calculated as follows:

$$G_1 = 1 + \frac{R_F}{R_G} \quad (12)$$

$$G_2 = 1 + \frac{R_T + \frac{R_F}{G_1}}{R_C} \quad (13)$$

$$NG = G_1 \times G_2 \quad (14)$$

A unity-gain buffer can be designed by selecting $R_T = R_F = 20.0\Omega$ and $R_C = 40.2\Omega$ (do not use R_G). This gives a noise gain of 2, so the response will be similar to the Characteristics Plots with G = +2. Decreasing RC to 20.0Ω will increase the noise gain to 3, which typically gives a flat frequency response, but with less bandwidth.

The circuit in Figure 51 can be redesigned to have less peaking by increasing the noise gain to 3. This is accomplished by adding $R_C = 2.55k\Omega$ across the op amp inputs.

8.2.3 Single-Supply Active Filter

The OPA830, while operating on a single +5V supply, lends itself well to high-frequency active filter designs. Again, the key additional requirement is to establish the DC operating point of the signal near the supply midpoint for highest dynamic range. Figure 55 shows an example design of a 1MHz low-pass Butterworth filter using the Sallen-Key topology.

Both the input signal and the gain setting resistor are AC-coupled using 0.1µF blocking capacitors (actually giving bandpass response with the low-frequency pole set to 32kHz for the component values shown). As discussed for Figure 51, this allows the midpoint bias formed by the two 1.87kΩ resistors to appear at both the input and output terminals. The midband signal gain is set to +4 (12dB) in this case. The capacitor to ground on the non-inverting input is intentionally set larger to dominate input parasitic terms. At a gain of +4, the OPA830 on a single supply will show 30MHz small- and large-signal bandwidth. The resistor values have been slightly adjusted to account for this limited bandwidth in the amplifier stage. Tests of this circuit show a precise 1MHz, −3dB point with a maximally-flat passband (above the 32kHz AC-coupling corner), and a maximum stop band attenuation of 36dB at the amplifier's −3dB bandwidth of 30MHz.

Copyright © 2014, Texas Instruments Incorporated

9 Power Supply Recommendations

Power supply decoupling is a critical aspect with a high-frequency amplifier design process. Careful decoupling provides higher quality ac performance (most notably improved distortion performance). The following guidelines ensure the highest level of performance.

1. Minimize the distance (< 0.25") from the power-supply terminals to high-frequency 0.1µF decoupling capacitors.
2. At the device terminals, the ground and power-plane layout should not be in close proximity to the signal I/O terminals.
3. Avoid narrow power and ground traces to minimize inductance between the terminals and the decoupling capacitors.
4. Each powersupply connection should always be decoupled with one of these capacitors. An optional supply decoupling capacitor (0.1µF) across the two power supplies (for bipolar operation) will improve 2nd-harmonic distortion performance. Larger (2.2µF to 6.8µF) decoupling capacitors, effective at lower frequency, should also be used on the main supply terminals. These may be placed somewhat farther from the device and may be shared among several devices in the same area of the PC board.

10 Layout

10.1 Layout Guidelines

Achieving optimum performance with a high-frequency amplifier like the OPA830 requires careful attention to board layout parasitics and external component types. Recommendations that will optimize performance include:

1. **Minimize parasitic capacitance** to any AC ground for all of the signal I/O terminals. Parasitic capacitance on the output and inverting input terminals can cause instability: on the non-inverting input, it can react with the source impedance to cause unintentional bandlimiting. To reduce unwanted capacitance, a window around the signal I/O terminals should be opened in all of the ground and power planes around those terminals. Otherwise, ground and power planes should be unbroken elsewhere on the board.
2. **Minimize the distance** (< 0.25") from the power-supply terminals to high-frequency 0.1µF decoupling capacitors. At the device terminals, the ground and power-plane layout should not be in close proximity to the signal I/O terminals. Avoid narrow power and ground traces to minimize inductance between the terminals and the decoupling capacitors. Each power-supply connection should always be decoupled with one of these capacitors. An optional supply decoupling capacitor (0.1µF) across the two power supplies (for bipolar operation) will improve 2nd-harmonic distortion performance. Larger (2.2µF to 6.8µF) decoupling capacitors, effective at lower frequency, should also be used on the main supply terminals. These may be placed somewhat farther from the device and may be shared among several devices in the same area of the PC board.
3. **Careful selection and placement of external components will preserve the high-frequency performance.** Resistors should be a very low reactance type. Surface-mount resistors work best and allow a tighter overall layout. Metal film or carbon composition axially-leaded resistors can also provide good high-frequency performance. Again, keep their leads and PC board traces as short as possible. Never use wire-wound type resistors in a high-frequency application. Since the output terminal and inverting input terminal are the most sensitive to parasitic capacitance, always position the feedback and series output resistor, if any, as close as possible to the output terminal. Other network components, such as non-inverting input termination resistors, should also be placed close to the package. Where double-side component mounting is allowed, place the feedback resistor directly under the package on the other side of the board between the output and inverting input terminals. Even with a low parasitic capacitance shunting the external resistors, excessively high resistor values can create significant time constants that can degrade performance. Good axial metal film or surface-mount resistors have approximately 0.2pF in shunt with the resistor. For resistor values > 1.5kΩ, this parasitic capacitance can add a pole and/or zero below 500MHz that can effect circuit operation. Keep resistor values as low as possible consistent with load driving considerations. The 750Ω feedback used in the Typical Characteristics is a good starting point for design.
4. **Connections to other wideband devices** on the board may be made with short direct traces or through onboard transmission lines. For short connections, consider the trace and the input to the next device as a lumped capacitive load. Relatively wide traces (50mils to 100mils) should be used, preferably with ground and power planes opened up around them. Estimate the total capacitive load and set RS from the typical characteristic curve *Recommended R_S vs Capacitive Load*. Low parasitic capacitive loads < 5pF) may not

Copyright © 2014, Texas Instruments Incorporated

Layout Guidelines (continued)

need an R_S since the OPA830 is nominally compensated to operate with a 2pF parasitic load. Higher parasitic capacitive loads without an R_S are allowed as the signal gain increases (increasing the unloaded phase margin). If a long trace is required, and the 6dB signal loss intrinsic to a doubly-terminated transmission line is acceptable, implement a matched impedance transmission line using microstrip or stripline techniques (consult an ECL design handbook for microstrip and stripline layout techniques). A 50Ω environment is normally not necessary onboard, and in fact, a higher impedance environment will improve distortion as shown in the distortion versus load plots. With a characteristic board trace impedance defined (based on board material and trace dimensions), a matching series resistor into the trace from the output of the OPA830 is used as well as a terminating shunt resistor at the input of the destination device. Remember also that the terminating impedance will be the parallel combination of the shunt resistor and the input impedance of the destination device; this total effective impedance should be set to match the trace impedance. If the 6dB attenuation of a doubly-terminated transmission line is unacceptable, a long trace can be series-terminated at the source end only. Treat the trace as a capacitive load in this case and set the series resistor value as shown in the typical characteristic curve *Recommended R_S vs Capacitive Load*. This will not preserve signal integrity as well as a doubly-terminated line. If the input impedance of the destination device is low, there will be some signal attenuation due to the voltage divider formed by the series output into the terminating impedance.

5. **Socketing a high-speed part is not recommended**. The additional lead length and terminal-to-terminal capacitance introduced by the socket can create an extremely troublesome parasitic network which can make it almost impossible to achieve a smooth, stable frequency response. Best results are obtained by soldering the OPA830 onto the board.

10.2 Input and ESD Protection

The OPA830 is built using a very high-speed complementary bipolar process. The internal junction breakdown voltages are relatively low for these very small geometry devices. These breakdowns are reflected in the Absolute Maximum Ratings table. All device terminals are protected with internal ESD protection diodes to the power supplies, as shown in Figure 60.

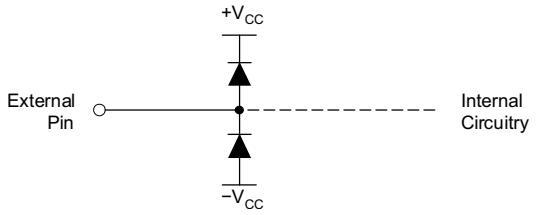

Figure 60. Internal ESD Protection

These diodes provide moderate protection to input overdrive voltages above the supplies as well. The protection diodes can typically support 30mA continuous current. Where higher currents are possible (that is, in systems with ±15V supply parts driving into the OPA830), current-limiting series resistors should be added into the two inputs. Keep these resistor values as low as possible, since high values degrade both noise performance and frequency response.

Copyright © 2014, Texas Instruments Incorporated

10.3 Layout Example

This demonstration fixture is a two-layer PCB with the power traces on the bottom layer. Even though both sides have a ground plane, a window has been opened up around the DUT and its surrounding components. The purpose of this window is to reduce the parasitic capacitances between sensitive nodes and the ground planes. The footprint of the SMA connectors were designed to use straight connectors in either a vertical or horizontal mounting position. Note that the center conductor of the SMA must be on the top side of the board when mounted horizontally.

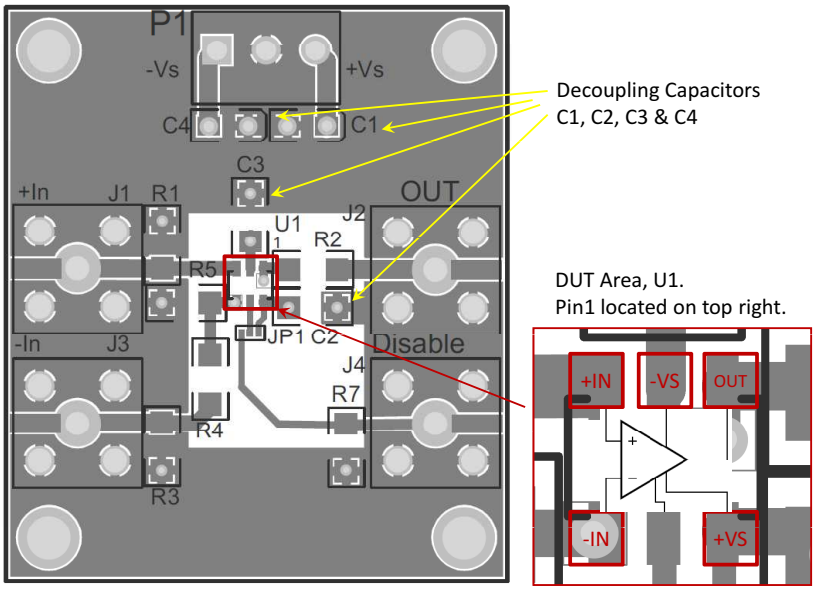

Figure 61. Decoupling Capacitors and DUT Area

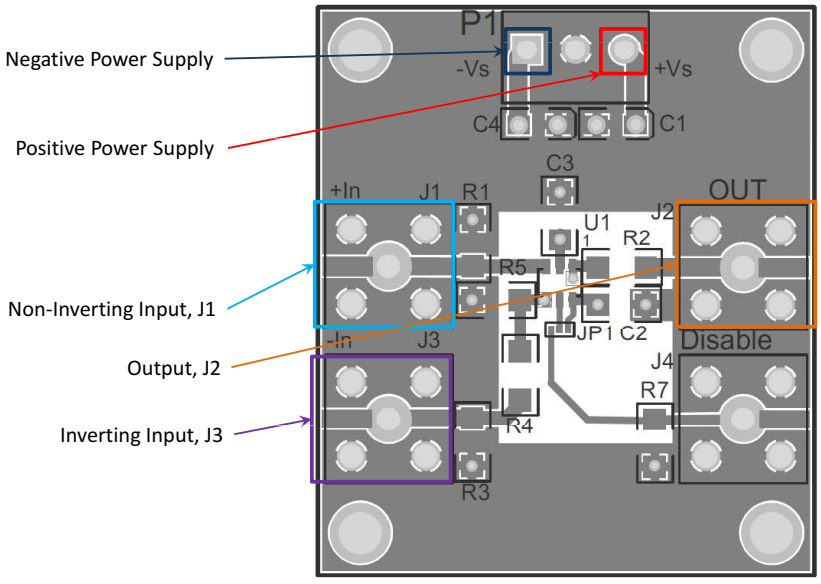

Figure 62. Power Supply, Non-Inverting, Inverting Input and Output

Copyright © 2014, Texas Instruments Incorporated

Layout Example (continued)

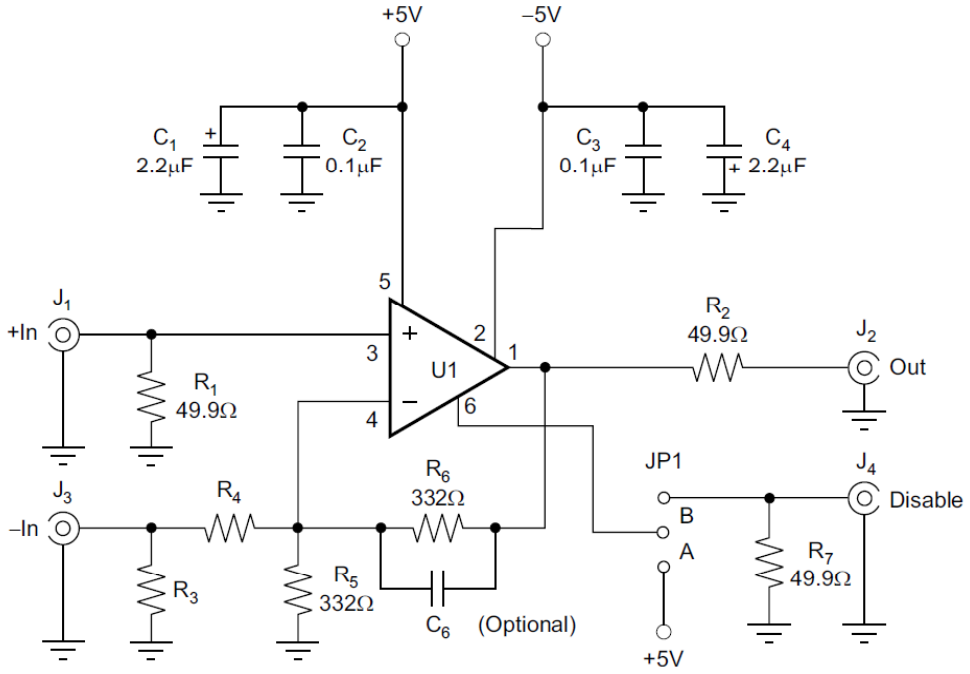

G = 2.
R3, R4, R7, C6 not assembled.

Figure 63. Schematics Diagram

Table 3. Component Descriptions

PART	DESCRIPTION
C1, C4	2.2µF, 16V, Size 3548
C2, C3	0.1µF, 50V, Size 1206
C6	Feedback capacitor (optional); depends on application (not used on current feedback op amps).
R1, R2, R7	Typically 50Ω
R4, R5, R6	Depends on application
JP1	Power Connector (On-Shore Technology ED555/3DS)
J1 – J4	SMA or SMB Connectors
R3	Set to get R3 ‖ R4 = desired input impedance for inverting operation

Copyright © 2014, Texas Instruments Incorporated

11 Device and Documentation Support

11.1 Trademarks

All trademarks are the property of their respective owners.

11.2 Electrostatic Discharge Caution



These devices have limited built-in ESD protection. The leads should be shorted together or the device placed in conductive foam during storage or handling to prevent electrostatic damage to the MOS gates.

11.3 Glossary

SLYZ022 — *TI Glossary*.

This glossary lists and explains terms, acronyms and definitions.

12 Mechanical, Packaging, and Orderable Information

The following pages include mechanical packaging and orderable information. This information is the most current data available for the designated devices. This data is subject to change without notice and revision of this document. For browser-based versions of this data sheet, refer to the left-hand navigation.

Copyright © 2014, Texas Instruments Incorporated

PACKAGING INFORMATION

Orderable Device	Status (1)	Package Type	Package Drawing	Pins	Package Qty	Eco Plan (2)	Lead/Ball Finish (6)	MSL Peak Temp (3)	Op Temp (°C)	Device Marking (4/5)	Samples
OPA830TDBVREP	ACTIVE	SOT-23	DBV	5	3000	Green (RoHS & no Sb/Br)	CU NIPDAU	Level-2-260C-1 YEAR	-40 to 105	SLM	Samples
V62/14610-01XE	ACTIVE	SOT-23	DBV	5	3000	Green (RoHS & no Sb/Br)	CU NIPDAU	Level-2-260C-1 YEAR	-40 to 105	SLM	Samples

(1) The marketing status values are defined as follows:
ACTIVE: Product device recommended for new designs.
LIFEBUY: TI has announced that the device will be discontinued, and a lifetime-buy period is in effect.
NRND: Not recommended for new designs. Device is in production to support existing customers, but TI does not recommend using this part in a new design.
PREVIEW: Device has been announced but is not in production. Samples may or may not be available.
OBSOLETE: TI has discontinued the production of the device.

(2) **RoHS:** TI defines "RoHS" to mean semiconductor products that are compliant with the current EU RoHS requirements for all 10 RoHS substances, including the requirement that RoHS substance do not exceed 0.1% by weight in homogeneous materials. Where designed to be soldered at high temperatures, "RoHS" products are suitable for use in specified lead-free processes. TI may reference these types of products as "Pb-Free".
RoHS Exempt: TI defines "RoHS Exempt" to mean products that contain lead but are compliant with EU RoHS pursuant to a specific EU RoHS exemption.
Green: TI defines "Green" to mean the content of Chlorine (Cl) and Bromine (Br) based flame retardants meet JS709B low halogen requirements of <=1000ppm threshold. Antimony trioxide based flame retardants must also meet the <=1000ppm threshold requirement.

(3) MSL, Peak Temp. - The Moisture Sensitivity Level rating according to the JEDEC industry standard classifications, and peak solder temperature.

(4) There may be additional marking, which relates to the logo, the lot trace code information, or the environmental category on the device.

(5) Multiple Device Markings will be inside parentheses. Only one Device Marking contained in parentheses and separated by a "~" will appear on a device. If a line is indented then it is a continuation of the previous line and the two combined represent the entire Device Marking for that device.

(6) Lead/Ball Finish - Orderable Devices may have multiple material finish options. Finish options are separated by a vertical ruled line. Lead/Ball Finish values may wrap to two lines if the finish value exceeds the maximum column width.

Important Information and Disclaimer: The information provided on this page represents TI's knowledge and belief as of the date that it is provided. TI bases its knowledge and belief on information provided by third parties, and makes no representation or warranty as to the accuracy of such information. Efforts are underway to better integrate information from third parties. TI has taken and continues to take reasonable steps to provide representative and accurate information but may not have conducted destructive testing or chemical analysis on incoming materials and chemicals. TI and TI suppliers consider certain information to be proprietary, and thus CAS numbers and other limited information may not be available for release.

In no event shall TI's liability arising out of such information exceed the total purchase price of the TI part(s) at issue in this document sold by TI to Customer on an annual basis.

OTHER QUALIFIED VERSIONS OF OPA830-EP :

- Catalog: OPA830

NOTE: Qualified Version Definitions:

- Catalog - TI's standard catalog product

TAPE AND REEL INFORMATION

REEL DIMENSIONS

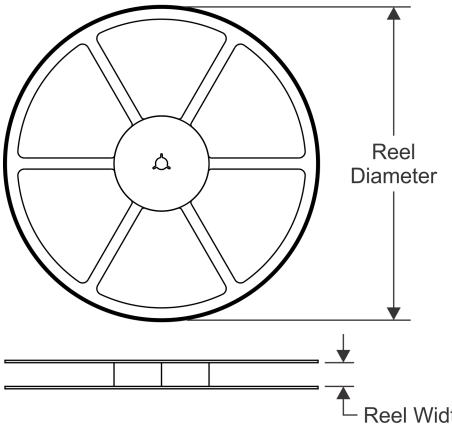

TAPE DIMENSIONS

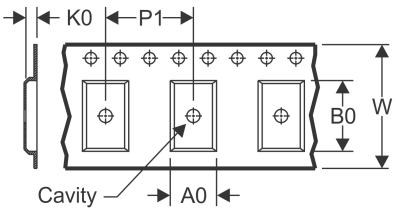

A0	Dimension designed to accommodate the component width
B0	Dimension designed to accommodate the component length
K0	Dimension designed to accommodate the component thickness
W	Overall width of the carrier tape
P1	Pitch between successive cavity centers

QUADRANT ASSIGNMENTS FOR PIN 1 ORIENTATION IN TAPE

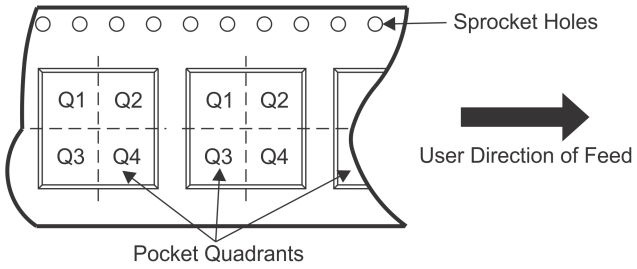

*All dimensions are nominal

Device	Package Type	Package Drawing	Pins	SPQ	Reel Diameter (mm)	Reel Width W1 (mm)	A0 (mm)	B0 (mm)	K0 (mm)	P1 (mm)	W (mm)	Pin1 Quadrant
OPA830TDBVREP	SOT-23	DBV	5	3000	179.0	8.4	3.2	3.2	1.4	4.0	8.0	Q3

TAPE AND REEL BOX DIMENSIONS

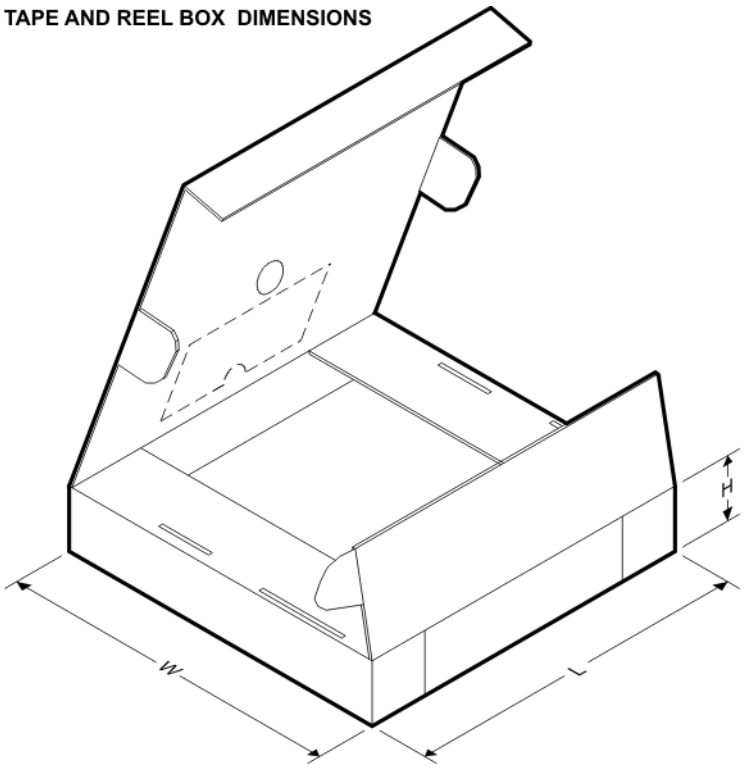

*All dimensions are nominal

Device	Package Type	Package Drawing	Pins	SPQ	Length (mm)	Width (mm)	Height (mm)
OPA830TDBVREP	SOT-23	DBV	5	3000	195.0	200.0	45.0

PACKAGE OUTLINE

DBV0005A

SOT-23 - 1.45 mm max height

SMALL OUTLINE TRANSISTOR

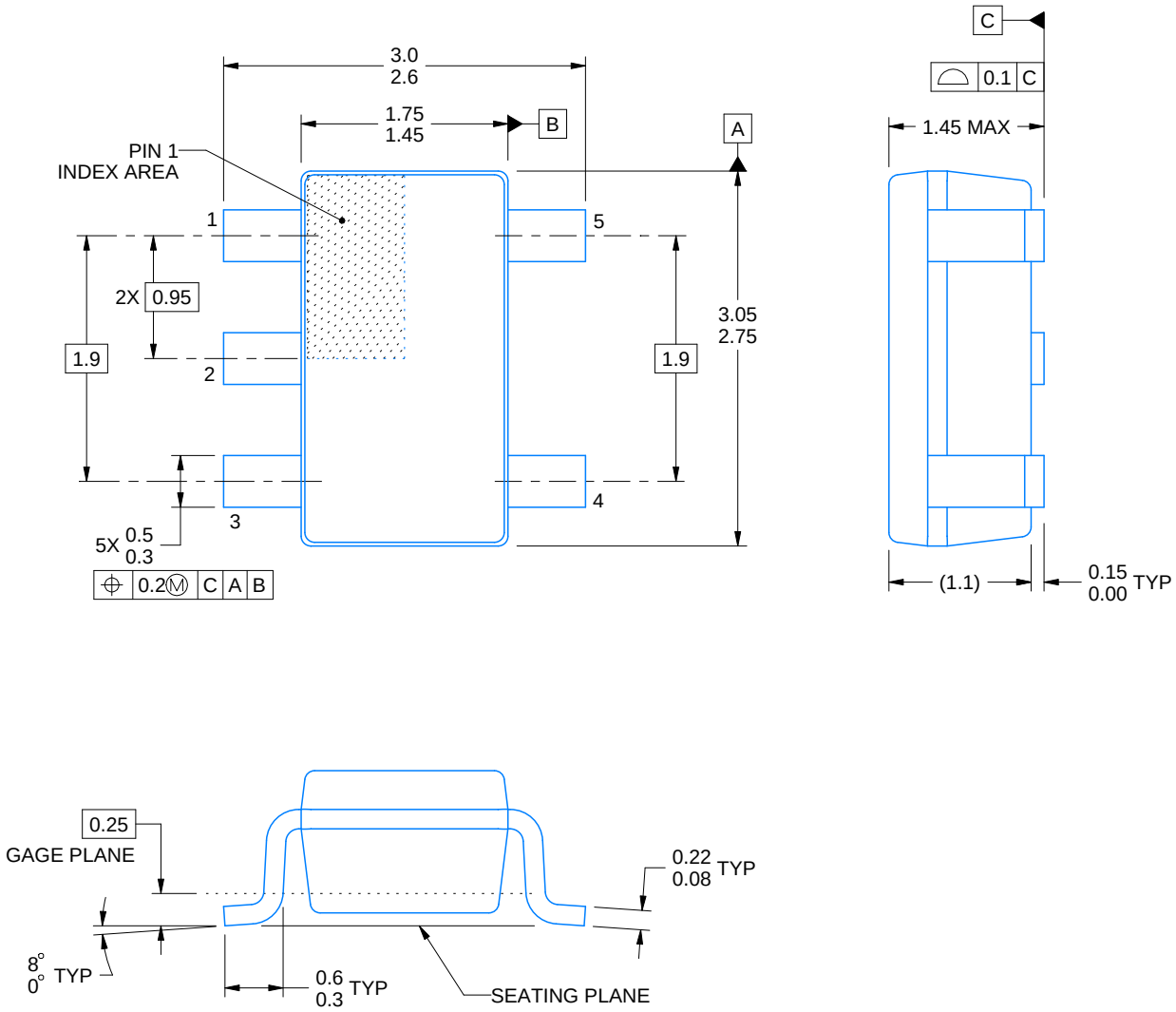

4214839/D 11/2018

NOTES:

1. All linear dimensions are in millimeters. Any dimensions in parenthesis are for reference only. Dimensioning and tolerancing per ASME Y14.5M.
2. This drawing is subject to change without notice.
3. Refernce JEDEC MO-178.
4. Body dimensions do not include mold flash, protrusions, or gate burrs. Mold flash, protrusions, or gate burrs shall not exceed 0.15 mm per side.

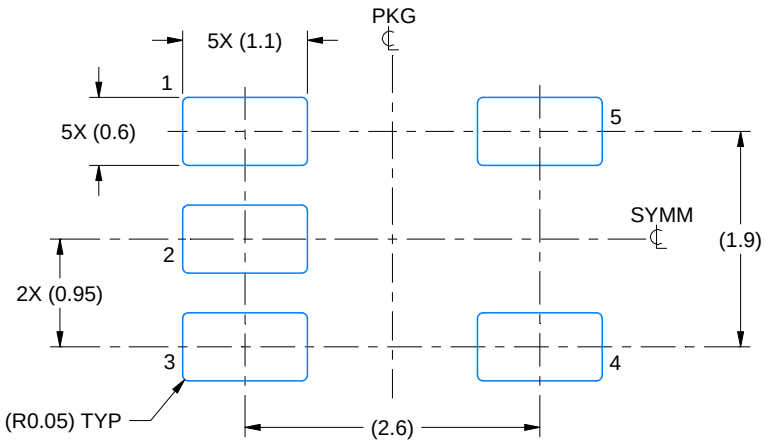

LAND PATTERN EXAMPLE
EXPOSED METAL SHOWN
SCALE:15X

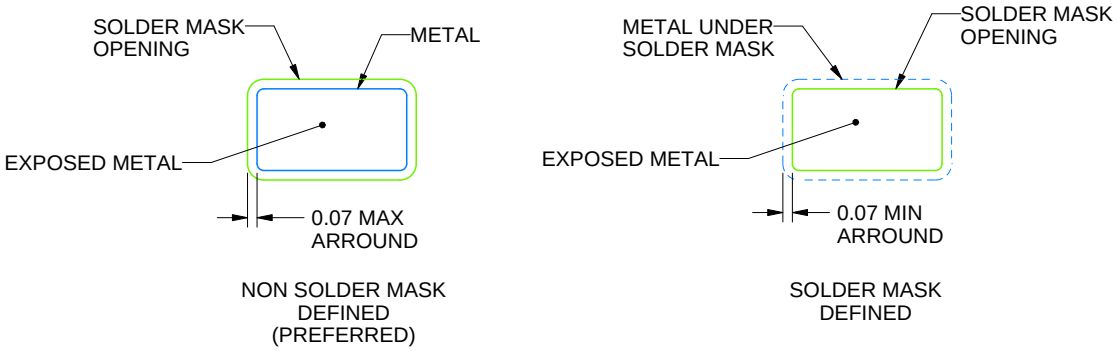

SOLDER MASK DETAILS

4214839/D 11/2018

NOTES: (continued)

5. Publication IPC-7351 may have alternate designs.
6. Solder mask tolerances between and around signal pads can vary based on board fabrication site.

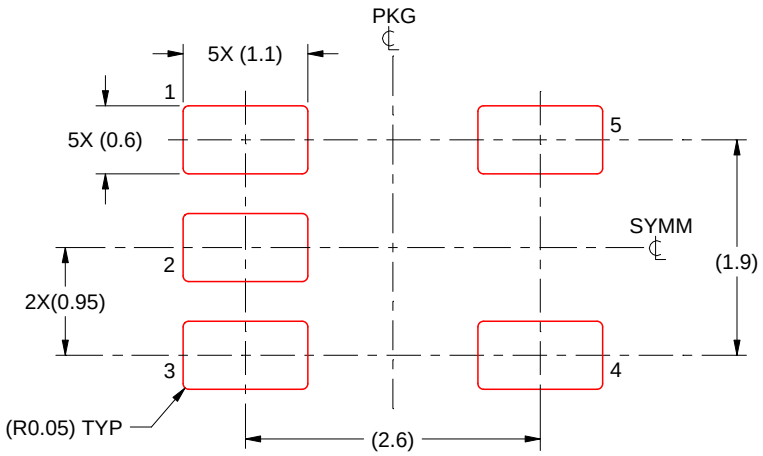

SOLDER PASTE EXAMPLE
BASED ON 0.125 mm THICK STENCIL
SCALE:15X

4214839/D 11/2018

NOTES: (continued)

7. Laser cutting apertures with trapezoidal walls and rounded corners may offer better paste release. IPC-7525 may have alternate design recommendations.
8. Board assembly site may have different recommendations for stencil design.

IMPORTANT NOTICE AND DISCLAIMER

TI PROVIDES TECHNICAL AND RELIABILITY DATA (INCLUDING DATASHEETS), DESIGN RESOURCES (INCLUDING REFERENCE DESIGNS), APPLICATION OR OTHER DESIGN ADVICE, WEB TOOLS, SAFETY INFORMATION, AND OTHER RESOURCES “AS IS” AND WITH ALL FAULTS, AND DISCLAIMS ALL WARRANTIES, EXPRESS AND IMPLIED, INCLUDING WITHOUT LIMITATION ANY IMPLIED WARRANTIES OF MERCHANTABILITY, FITNESS FOR A PARTICULAR PURPOSE OR NON-INFRINGEMENT OF THIRD PARTY INTELLECTUAL PROPERTY RIGHTS.

These resources are intended for skilled developers designing with TI products. You are solely responsible for (1) selecting the appropriate TI products for your application, (2) designing, validating and testing your application, and (3) ensuring your application meets applicable standards, and any other safety, security, or other requirements. These resources are subject to change without notice. TI grants you permission to use these resources only for development of an application that uses the TI products described in the resource. Other reproduction and display of these resources is prohibited. No license is granted to any other TI intellectual property right or to any third party intellectual property right. TI disclaims responsibility for, and you will fully indemnify TI and its representatives against, any claims, damages, costs, losses, and liabilities arising out of your use of these resources.

TI’s products are provided subject to TI’s Terms of Sale (www.ti.com/legal/termsofsale.html) or other applicable terms available either on ti.com or provided in conjunction with such TI products. TI’s provision of these resources does not expand or otherwise alter TI’s applicable warranties or warranty disclaimers for TI products.

Mailing Address: Texas Instruments, Post Office Box 655303, Dallas, Texas 75265
Copyright © 2019, Texas Instruments Incorporated