OPAx625 高带宽、高精度、低 THD+N、16 位和 18 位模数转换器 (ADC) 驱动器

1 特性

- 高驱动模式：
  - 增益带宽 (GBW) (G = 100)：120MHz
  - 转换率：115V/μs
  - 4V 输出时的 16 位稳定时间： 280ns
  - 低电压噪声：10kHz 时为 2.5nV/√Hz
  - 低输出阻抗：1MHz 时为 1Ω
  - 偏移电压：±100μV（最大值）
  - 偏移电压漂移：±3μV/ºC（最大值）
  - 低静态电流：2mA（典型值）
- 低功耗模式：
  - GBW：1MHz
  - 低静态电流：270μA（典型值）
- 功率可扩展性 特性：
  - 可超快速地从低功耗模式切换至高驱动模式：170ns
- 高交流和直流精度：
  - 低失真：100kHz 时，HD2 为 –122dBc，HD3 为 –140dBc
  - 输入共模范围包括负电源轨
  - 轨到轨输出
  - 宽额定温度范围：-40℃ 至 +125℃

2 应用

- 精密逐次逼近寄存器 (SAR) ADC 驱动器
- 精密电压基准缓冲器
- 可编程逻辑控制器
- 测试和测量设备
- 功耗敏感型数据采集系统

SAR ADC 驱动器

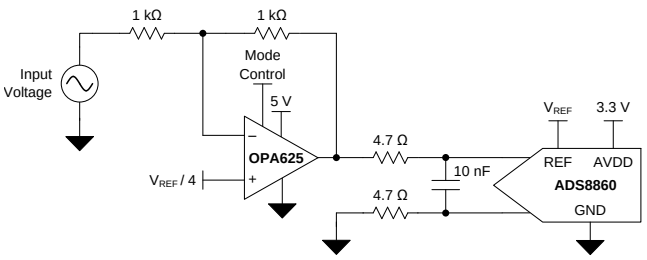

3 说明

OPAx625 系列运算放大器是出色的 16 位和 18 位 SAR ADC 驱动器，具备高精度、低总谐波失真 (THD) 及低噪声等诸多优势，可提供一套独特的电源可扩展解决方案。该器件系列在额定工作条件下的 16 位稳定时间为 280ns，可提供真正的 16 位有效位数 (ENOB)。该系列器件具备高直流精度（偏移电压仅为 100μV）、120MHz 的宽增益带宽积以及 2.5nV/√Hz 的低宽带噪声，并且经优化可驱动高吞吐量、高分辨率的 SAR ADC，例如 ADS88xx 系列 SAR ADC。

此 OPAx625 具有 两种工作模式：高驱动模式和低功耗模式。在创新型低功耗模式下，OPAx625 会跟踪输入信号，从而能够在 170ns 内以 16 位 ENOB 从低功耗模式切换至高驱动模式。

OPAx625 系列采用 6 引脚小外形尺寸晶体管 (SOT) 封装和 10 引脚超薄小外形尺寸 (VSSOP) 封装，额定工作温度范围为 –40°C 至 +125℃。

器件信息(1)

器件型号	封装	封装尺寸（标称值）
OPA625	SOT (6)	2.90mm x 1.60mm
OPA2625	VSSOP (10)	3.00mm × 3.00mm

(1) 要了解所有可用封装，请参见数据表末尾的封装选项附录。

16 位 SAR ADC，f_{IN} = 10kHz，1MSPS FFT

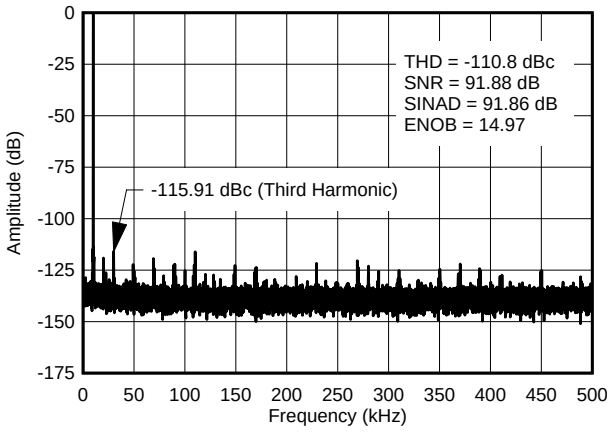

An IMPORTANT NOTICE at the end of this data sheet addresses availability, warranty, changes, use in safety-critical applications, intellectual property matters and other important disclaimers. PRODUCTION DATA.

目录

1 特性 ... 1
2 应用 ... 1
3 说明 ... 1
4 修订历史记录 ... 2
5 **Pin Configuration and Functions** ... 3
6 **Specifications** ... 4
6.1 Absolute Maximum Ratings ... 4
6.2 ESD Ratings ... 4
6.3 Recommended Operating Conditions ... 4
6.4 Thermal Information ... 5
6.5 Electrical Characteristics High-Drive Mode ... 5
6.6 Electrical Characteristics Low-Power Mode ... 7
6.7 Electrical Characteristics High-Drive Mode ... 8
6.8 Electrical Characteristics Low-Power Mode ... 10
6.9 Switching Characteristics ... 11
6.10 Typical Characteristics ... 12
7 **Parameter Measurement Information** ... 23
7.1 DC Parameter Measurements ... 23
7.2 Transient Parameter Measurements ... 24
7.3 AC Parameter Measurements ... 24
7.4 Noise Parameter Measurements ... 25
8 **Detailed Description** ... 26
8.1 Overview ... 26
8.2 Functional Block Diagram ... 26
8.3 Feature Description ... 27
8.4 Device Functional Modes ... 28
9 **Application and Implementation** ... 30
9.1 Application Information ... 30
9.2 Typical Applications ... 30
10 **Power Supply Recommendations** ... 34
11 **Layout** ... 34
11.1 Layout Guidelines ... 34
11.2 Layout Example ... 35
12 器件和文档支持 ... 36
12.1 器件支持 ... 36
12.2 文档支持 ... 36
12.3 相关链接 ... 36
12.4 Community Resources ... 36
12.5 商标 ... 37
12.6 静电放电警告 ... 37
12.7 Glossary ... 37
13 机械、封装和可订购信息 ... 37

4 修订历史记录

Changes from Original (April 2015) to Revision A **Page**

- 已将 OPA2625 从“产品预览”改为“量产数据”；已添加 OPA2625 规范至数据表 ... 1
- Changed MODE B pin description options for V+ and V– ... 3
- Added crosstalk parameter to *Electrical Characteristics* table ... 5
- Added crosstalk parameter to *Electrical Characteristics* table ... 8
- Changed short-circuit current value from 150 mA to 80 mA in *Electrical Characteristics* table ... 9
- Changed short-circuit current value from 100 mA to 50 mA in *Electrical Characteristics* table ... 10
- Added OPA2625 data to 图 12 ... 13
- Added 图 24 ... 15
- Deleted "18" from several typical characteristic figure titles (typo) ... 19

Copyright © 2015, Texas Instruments Incorporated

5 Pin Configuration and Functions

OPA625: DBV Package
6-Pin SOT
Top View

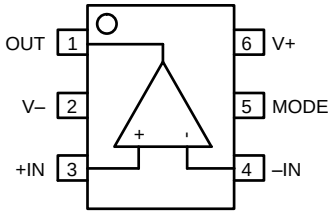

OPA2625: DGS Package
10-Pin VSSOP
Top View

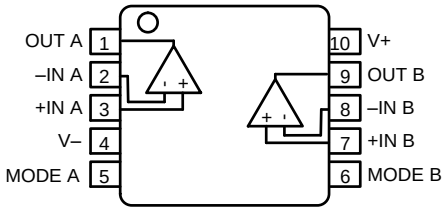

Pin Functions: OPA625

PIN		I/O	DESCRIPTION
NAME	NO		
+IN	3	I	Noninverting input
–IN	4	I	Inverting input
MODE	5	I	Controls OPA625 mode: V+ = low-power mode V– = high-drive mode NOTE: Do not float this pin.
OUT	1	O	Output terminal
V+	6	—	Positive supply voltage
V–	2	—	Negative supply voltage

Pin Functions: OPA2625

PIN		I/O	DESCRIPTION
NAME	NO.		
+IN A	3	I	Noninverting input for channel A
–IN A	2	I	Inverting input for channel A
+IN B	7	I	Noninverting input for channel B
–IN B	8	I	Inverting input for channel B
MODE A	5	I	Controls OPA2625 mode for channel A: V+ = low-power mode V– = high-drive mode NOTE: Do not float this pin.
MODE B	6	I	Controls OPA2625 mode for channel B: V+ = low-power mode V– = high-drive mode NOTE: Do not float this pin.
OUT A	1	O	Output terminal for channel A
OUT B	9	O	Output terminal for channel B
V+	10	—	Positive supply voltage
V–	4	—	Negative supply voltage

Copyright © 2015, Texas Instruments Incorporated

6 Specifications

6.1 Absolute Maximum Ratings

over operating free-air temperature range (unless otherwise noted)(1)

		MIN	MAX	UNIT
Supply voltage, V_S	(V+) – (V–)		6	V
Input voltage(2)	+IN	(V–) – 0.3	(V+) + 0.3	V
	–IN	(V–) – 0.3	(V+) + 0.3	
	MODE	(V–) – 0.3	(V+) + 0.3	
Output voltage	OUT	(V–)	(V+)	V
Sink current	+IN		10	mA
	–IN		10	
	MODE		10	
	OUT		150	
Source current	+IN		10	mA
	–IN		10	
	MODE		10	
	OUT(2)		150	
Temperature	Operating junction	–40	150	°C
	Storage, T_{stg}	–65	150	

(1) Stresses beyond those listed under *Absolute Maximum Ratings* may cause permanent damage to the device. These are stress ratings only, which do not imply functional operation of the device at these or any other conditions beyond those indicated under *Recommended Operating Conditions*. Exposure to absolute-maximum-rated conditions for extended periods may affect device reliability.
(2) For input voltages beyond the power-supply rails, voltage or current must be limited.

6.2 ESD Ratings

			VALUE	UNIT
$V_{(ESD)}$	Electrostatic discharge	Human-body model (HBM), per ANSI/ESDA/JEDEC JS-001(1)	±3000	V
		Charged-device model (CDM), per JEDEC specification JESD22-C101(2)	±1500	

(1) JEDEC document JEP155 states that 500-V HBM allows safe manufacturing with a standard ESD control process.
(2) JEDEC document JEP157 states that 250-V CDM allows safe manufacturing with a standard ESD control process.

6.3 Recommended Operating Conditions

over operating free-air temperature range (unless otherwise noted)

			MIN	NOM	MAX	UNIT
V_S	Supply input voltage, (V+) – (V–)		2.7		5.5	V
V_I	Input voltage	+IN	(V–)		(V+) – 1.15	V
		–IN	(V–)		(V+) – 1.15	
		MODE	(V–)		(V+)	
V_O	Output voltage		(V–)		(V+)	V
I_O	Output current		–120		120	mA
T_A	Operating free-air temperature		–40		125	°C
T_J	Operating junction temperature		–40		125	°C

Copyright © 2015, Texas Instruments Incorporated

6.4 Thermal Information

THERMAL METRIC(1)		OPA625 DBV (SOT) 6 PINS	OPA2625 DGS (VSSOP) 10 PINS	UNIT
$R_{\theta JA}$	Junction-to-ambient thermal resistance	184.9	171.7	°C/W
$R_{\theta JC(top)}$	Junction-to-case (top) thermal resistance	123.6	68.4	°C/W
$R_{\theta JB}$	Junction-to-board thermal resistance	30.7	91.9	°C/W
ψ_{JT}	Junction-to-top characterization parameter	22.1	9.4	°C/W
ψ_{JB}	Junction-to-board characterization parameter	30.2	90.5	°C/W
$R_{\theta JC(bot)}$	Junction-to-case (bottom) thermal resistance	N/A	N/A	°C/W

(1) For more information about traditional and new thermal metrics, see the *Semiconductor and IC Package Thermal Metrics* application report, SPRA953.

6.5 Electrical Characteristics High-Drive Mode

at T_A = 25°C, V+ = 5 V, V– = 0 V, MODE pin connected to V– pin, $V_{COM} = V_O$ = 2.5 V, gain (G) = 1, R_F = 1 kΩ, C_F = 2.7 pF, C_{LOAD} = 20 pF, and R_{LOAD} = 2 kΩ connected to 2.5 V (unless otherwise noted)

PARAMETER		TEST CONDITIONS		MIN	TYP	MAX	UNIT
AC PERFORMANCE							
	Unity gain frequency	V_O = 10 mV_{PP}			80		MHz
φ_m	Phase margin				50		Degrees
GBW	Gain-bandwidth product	G = 100, V_O = 10 mV_{PP}			120		MHz
SR	Slew rate	V_O = 1-V step, G = 1			45		V/µs
		V_O = 4-V step, G = 2			115		
t_{settle}	Settling time	V_O = 4-V step, G = 2	Settling time to 0.1% (10-bit accuracy)		80		ns
			to 0.005% (14-bit accuracy)		110		
			to 0.00153% (16-bit accuracy)		280		
	Overshoot	V_O = 4-V step, G = 2			2.5%		
	Undershoot	V_O = 4-V step, G = 2			3%		
HD2	Second-order harmonic Distortion	V_O = 2 V_{PP}, G = 2	f = 10 kHz		144		dBc
			f = 100 kHz		122		
			f = 1 MHz		80		
HD3	Third-order harmonic Distortion	V_O = 2 V_{PP}, G = 2	f = 10 kHz		155		dBc
			f = 100 kHz		140		
			f = 1 MHz		80		
	Second-order intermodulation distortion	V_O = 2 V_{PP}, f = 1 MHz, 200-kHz tone spacing			90		dBc
	Third-order intermodulation distortion	V_O = 2 V_{PP}, f = 1 MHz, 200-kHz tone spacing			100		dBc
V_N	Input noise voltage	f = 0.1 Hz to 10 Hz, peak-to-peak			0.8		μV_{PP}
		f = 0.1 Hz to 10 Hz, rms			120		nV_{RMS}
V_n	Input voltage noise density	f = 1 kHz			3.2		nV/√Hz
		f = 10 kHz			2.5		
I_n	Input current noise density	f = 1 kHz			4.1		pA/√Hz
		f = 10 kHz			2.8		
t_{OR}	Overload recovery time	G = 5			50		ns
Z_o	Open-loop output impedance	f = 1 MHz			1		Ω
	Crosstalk	DC			150		dB
		f = 1 MHz			127		
DC PERFORMANCE							
V_{OS}	Input offset voltage				15	±100	µV
		T_A = –40°C to +125°C				±300	

Copyright © 2015, Texas Instruments Incorporated

Electrical Characteristics High-Drive Mode (continued)

at T_A = 25°C, V+ = 5 V, V– = 0 V, MODE pin connected to V– pin, $V_{COM} = V_O$ = 2.5 V, gain (G) = 1, R_F = 1 kΩ, C_F = 2.7 pF, C_{LOAD} = 20 pF, and R_{LOAD} = 2 kΩ connected to 2.5 V (unless otherwise noted)

PARAMETER		TEST CONDITIONS		MIN	TYP	MAX	UNIT
dV_{OS}/dT	Input offset voltage drift	T_A = –40°C to +125°C			0.5	±3	µV/°C
		OPA2625 only, T_A = –40°C to +125°C			0.6	±4	
PSRR	Power-supply rejection ratio	2.7 V ≤ (V+) ≤ 5 V		100			dB
			T_A = –40°C to +125°C	90	120		
I_B	Input bias current				2	4	µA
		T_A = –40°C to +125°C				5.7	
		OPA2625 only, T_A = –40°C to +125°C				6.5	
dI_B/dT	Input bias current drift	T_A = –40°C to +125°C			15		nA/°C
I_{OS}	Input offset current				20	120	nA
		T_A = –40°C to +125°C				150	
		OPA2625 only, T_A = –40°C to +125°C				200	
dI_{OS}/dT	Input offset current drift	T_A = –40°C to +125°C			0.6		nA/°C
OPEN LOOP GAIN							
A_{OL}	Open-loop gain	(V–) + 0.2 V < V_O < (V+) – 0.2 V, R_{LOAD} = 600 Ω		110			dB
		(V–) + 0.15 V < V_O < (V+) – 0.15 V, R_{LOAD} = 10 kΩ		114			
		T_A = –40°C to +125°C	(V–) + 0.2 V < V_O < (V+) – 0.2 V, R_{LOAD} = 600 Ω	106	128		
			(V–) + 0.15 V < V_O < (V+) – 0.15 V, R_{LOAD} = 10 kΩ	110	132		
INPUT VOLTAGE							
V_{CM}	Common-mode voltage range	T_A = –40°C to +125°C		(V–)		(V+) – 1.15	V
CMRR	Common-mode rejection ratio	(V–) < V_{COM} < (V+) – 1.15 V		100	117		dB
			T_A = –40°C to +125°C	90	115		
INPUT IMPEDANCE							
Z_{ID}	Differential input impedance				27 || 1.2		KΩ || pF
Z_{IC}	Common-mode input impedance				47 || 1.5		MΩ || pF
OUTPUT							
	Output voltage swing to the rail	R_{LOAD} = 600 Ω			60	80	mV
			T_A = –40°C to +125°C			100	
		R_{LOAD} = 10 kΩ			20	35	
			T_A = –40°C to +125°C			40	
I_{sc}	Short-circuit current				150		mA
C_{LOAD}	Capacitive load drive			See Typical Characteristics			
MODE							
V_{IL}	High-drive (HD) mode threshold	T_A = –40°C to +125°C		(V–)		(V–) + 0.5	V
V_{IH}	Low-power (LP) mode threshold	T_A = –40°C to +125°C		(V–) + 1.2		(V+)	V
I_{IL}	Low-level input current	T_A = –40°C to +125°C, V_{MODE} ≤ (V–) + 0.5 V			0.01	1	µA
I_{IH}	High-level input current	T_A = –40°C to +125°C, V_{MODE} ≥ (V–) + 1.2 V			20	30	µA
		OPA2625 only, T_A = –40°C to +125°C, V_{MODE} ≥ (V–) + 1.2 V				1	
POWER SUPPLY							
I_Q	Quiescent current per amplifier	I_O = 0 mA, MODE connected to ground			2	2.2	mA
			T_A = –40°C to +125°C			3.1	

Copyright © 2015, Texas Instruments Incorporated

6.6 Electrical Characteristics Low-Power Mode

at T_A = 25°C, V+ = 5 V, V– = 0 V, V_{MODE} = 5 V, V_{COM} = V_O = 2.5 V, gain (G) = 1, R_F = 1 kΩ, C_F = 2.7 pF, C_{LOAD} = 20 pF, and R_{LOAD} = 2 kΩ connected to 2.5 V (unless otherwise noted)

PARAMETER		TEST CONDITIONS		MIN	TYP	MAX	UNIT
AC PERFORMANCE							
GBW	Gain-bandwidth product	G = 100, V_O = 10 mV_{PP}			1		MHz
φ_m	Phase margin				72		Degrees
SR	Slew rate	V_O = 1-V step			4.3		V/µs
		V_O = 4-V step, G = 2			4.1		
Z_o	Open-loop output impedance	f = 1 MHz			12		Ω
DC PERFORMANCE							
V_{OS}	Input offset voltage				0.6	3	mV
		T_A = –40°C to +125°C			0.7	3.7	
PSRR	Power-supply rejection ratio	2.7 V ≤ (V+) ≤ 5 V		74			dB
			T_A = –40°C to +125°C	70	100		
I_B	Input bias current					150	nA
		T_A = –40°C to +125°C			140	200	
		OPA2625 only, T_A = –40°C to +125°C				250	
I_{OS}	Input offset current					20	nA
		T_A = –40°C to +125°C				25	
OPEN LOOP GAIN							
A_{OL}	Open-loop gain	T_A = –40°C to +125°C	(V–) + 0.2 V < V_O < (V+) – 0.2 V, R_{LOAD} = 600 Ω	70	100		dB
			(V–) + 0.15 V < V_O < (V+) – 0.15 V, R_{LOAD} = 10 kΩ	90	100		
INPUT VOLTAGE							
V_{CM}	Common-mode voltage range	T_A = –40°C to +125°C		(V–)		(V+) – 1.15	V
CMRR	Common-mode rejection ratio	(V–) < V_{COM} < (V+) – 1.15 V		66	114		dB
			T_A = –40°C to +125°C	60	114		
OUTPUT							
	Output voltage swing to the rail	T_A = –40°C to +125°C	R_{LOAD} = 600 Ω			110	mV
			R_{LOAD} = 10 kΩ			40	
I_{sc}	Short-circuit current				100		mA
POWER SUPPLY							
I_Q	Quiescent current per amplifier	I_O = 0 mA, MODE connected to V+			270	320	µA
			T_A = –40°C to +125°C			450	

Copyright © 2015, Texas Instruments Incorporated

6.7 Electrical Characteristics High-Drive Mode

at T_A = +25°C, V+ = 2.7 V, V– = 0 V, V_{MODE} = 0 V, V_{COM} = V_O = 1.35 V, gain (G) = 1, R_F = 1 kΩ, C_F = 2.7 pF, C_{LOAD} = 20 pF, and R_{LOAD} = 1 kΩ connected to 1.35 V (unless otherwise noted)

PARAMETER		TEST CONDITIONS		MIN	TYP	MAX	UNIT
AC PERFORMANCE							
	Unity gain frequency	V_O = 10 mV_{PP}			76		MHz
φ_m	Phase margin				45		Degrees
GBW	Gain-bandwidth product	G = 100, V_O = 10 mV_{PP}			120		MHz
SR	Slew rate	V_O = 1-V step, G = 2			45		V/µs
t_{settle}	Settling time	V_O = 1-V step, G = 2	to 0.1%		80		ns
			to 0.01%		170		
			to 0.000763% (17-bit accuracy)		250		
	Overshoot	V_O = 1-V step, G = 2			6%		
	Undershoot	V_O = 1-V step, G = 2			5%		
HD2	Second order harmonic Distortion	(V+) = 3.3 V, (V–) = 0 V, V_{COM} = 1.1 V, V_O = 2 V_{PP}	f = 10 kHz		136		dBc
			f = 100 kHz		118		
			f = 1 MHz		80		
HD3	Third order harmonic Distortion	(V+) = 3.3 V, (V–) = 0 V, V_{COM} = 1.1 V, V_O = 2 V_{PP}	f = 10 kHz		143		dBc
			OPA2625 only, f = 10 kHz		143		
			f = 100 kHz		130		
			OPA2625 only, f = 100 kHz		125		
			f = 1 MHz		85		
			OPA2625 only, f = 1 MHz		74		
	Second order inter-modulation distortion	(V+) = 3.3 V, (V–) = 0 V, V_{COM} = 1.1 V, V_O = 2 V_{PP}, f = 1 MHz, 200-kHz tone spacing			95		dBc
	Third order inter-modulation distortion	(V+) = 3.3 V, (V–) = 0 V, V_{COM} = 1.1V, V_O = 1 V_{PP}, f = 1 MHz, 200-kHz tone spacing			104		dBc
V_N	Input noise voltage	f = 0.1 Hz to 10 Hz peak to peak			0.8		μV_{PP}
		f = 0.1 Hz to 10 Hz rms			120		nV_{RMS}
V_n	Input voltage noise density	f = 10 kHz			2.5		nV/√Hz
I_n	Input current noise density	f = 10 kHz			2.8		pA/√Hz
t_{OR}	Overload recovery time	G = 5			35		ns
Z_o	Open-loop output impedance	f = 1 MHz			1.3		Ω
	Crosstalk	DC			150		dB
		f = 1 MHz			127		
DC PERFORMANCE							
V_{OS}	Input offset voltage				15	±100	µV
		T_A = –40°C to +125°C				±300	
dV_{OS}/dT	Input offset voltage drift	T_A = –40°C to +125°C			0.5	±3.1	µV/°C
		OPA2625 only, T_A = –40°C to +125°C			0.6	±4	
I_B	Input bias current				2	4	µA
		T_A = –40°C to +125°C				5.7	
		OPA2625 only, T_A = –40°C to +125°				6.5	
dI_B/dT	Input bias current drift	T_A = –40°C to +125°C			15		nA/°C
I_{OS}	Input offset current				20	120	nA
		T_A = –40°C to +125°C				150	
		OPA2625 only, T_A = –40°C to +125°				200	
dI_{OS}/dT	Input offset current drift	T_A = –40°C to +125°C			80		pA/°C
OPEN-LOOP GAIN							

Copyright © 2015, Texas Instruments Incorporated

Electrical Characteristics High-Drive Mode (continued)

at T_A = +25°C, V+ = 2.7 V, V– = 0 V, V_{MODE} = 0 V, V_{COM} = V_O = 1.35 V, gain (G) = 1, R_F = 1 kΩ, C_F = 2.7 pF, C_{LOAD} = 20 pF, and R_{LOAD} = 1 kΩ connected to 1.35 V (unless otherwise noted)

PARAMETER		TEST CONDITIONS		MIN	TYP	MAX	UNIT
A_{OL}	Open-loop gain	(V–) + 0.2 V < V_O < (V+) – 0.2 V, R_{LOAD} = 600 Ω		110			dB
		(V–) + 0.15 V < V_O < (V+) – 0.15 V, R_{LOAD} = 10 kΩ		114			
		T_A = –40°C to +125°C	(V–) + 0.2 V < V_O < (V+) – 0.2 V, R_{LOAD} = 600 Ω	106	128		
			(V–) + 0.15 V < V_O < (V+) – 0.15 V, R_{LOAD} = 10 kΩ	110	132		
INPUT VOLTAGE							
V_{CM}	Common-mode voltage range	T_A = –40°C to +125°C		(V–)		(V+) – 1.15	V
CMRR	Common-mode rejection ratio	(V–) < V_{COM} < (V+) – 1.15 V		100	117		dB
			T_A = –40°C to +125°C	90	115		
INPUT IMPEDANCE							
Z_{ID}	Differential input impedance				27 || 0.8		KΩ || pF
Z_{IC}	Common-mode input impedance				47 || 1.2		MΩ || pF
OUTPUT							
	Output voltage swing to the rail	R_{LOAD} = 600 Ω			60	80	mV
			T_A = –40°C to +125°C			100	
		R_{LOAD} = 10 kΩ			20	35	
			T_A = –40°C to +125°C			40	
I_{SC}	Short-circuit current				80		mA
C_{LOAD}	Capacitive load drive			See Typical Characteristics			
MODE							
V_{IL}	High-drive (HD) mode threshold	T_A = –40°C to +125°C		(V–)		(V–) + 0.5	V
V_{IH}	Low-power (LP) mode threshold	T_A = –40°C to +125°C		(V–) + 1.2		(V+)	V
POWER SUPPLY							
I_Q	Quiescent current per amplifier	I_O = 0 mA MODE connected to ground			2	2.1	mA
			T_A = –40°C to +125°C			2.8	

Copyright © 2015, Texas Instruments Incorporated

6.8 Electrical Characteristics Low-Power Mode

at T_A = +25°C, V+ = 2.7 V, V– = 0 V, V_{MODE} = 2.7 V, V_{COM} = V_O = 1.35V, gain (G) = 1, R_F = 1 kΩ, C_F = 2.7 pF, C_{LOAD} = 20 pF, and R_{LOAD} = 1 kΩ connected to 1.35 V (unless otherwise noted)

PARAMETER		TEST CONDITIONS		MIN	TYP	MAX	UNIT
AC PERFORMANCE							
GBW	Gain-bandwidth product	G = 100, V_{IN} = 10 mV_{PP}			0.8		MHz
φ_m	Phase margin				72		Degrees
SR	Slew rate	V_O = 1 V-step, G = 2			3.7		V/µs
Z_o	Open-loop output impedance	f = 1 MHz			13		Ω
DC PERFORMANCE							
V_{OS}	Input offset voltage				0.6	3	mV
		T_A = –40°C to +125°C			0.7	±3.6	
I_B	Input bias current					150	nA
		T_A = –40°C to +125°C			140	220	
		OPA2625 only, T_A = –40°C to +125°				250	
I_{OS}	Input offset current					20	nA
		T_A = –40°C to +125°C				25	
OPEN LOOP GAIN							
A_{OL}	Open-loop gain	T_A = –40°C to +125°C	(V–) + 0.2 V < V_O < (V+) – 0.2 V, R_{LOAD} = 600 Ω	74	100		dB
			(V–) + 0.15 V < V_O < (V+) – 0.15 V, R_{LOAD} = 10 kΩ	84	100		
INPUT VOLTAGE							
V_{CM}	Common-mode voltage range	T_A = –40°C to +125°C		(V–)		(V+) – 1.15	V
CMRR	Common-mode rejection ratio	(V–) < V_{COM} < (V+) – 1.15 V		66	114		dB
			T_A = –40°C to +125°C	60	114		
OUTPUT							
	Output voltage swing to rail	T_A = –40°C to +125°C	R_{LOAD} = 600 Ω			110	mV
			R_{LOAD} = 10 kΩ			40	
I_{sc}	Short-circuit current				50		mA
POWER SUPPLY							
I_Q	Quiescent current per amplifier	I_O = 0 mA, MODE connected to V+			250	270	µA
			T_A = –40°C to +125°C			400	

版权 © 2015, Texas Instruments Incorporated

6.9 Switching Characteristics

at T_A = 25°C, V+ = 5 V, V– = 0 V, MODE pin connected to V– pin, gain (G) = 1 , V_{COM} = V_O = 2.5 V, C_{LOAD} = 20 pF, and R_{LOAD} = 1 kΩ connected to 2.5 V (unless otherwise noted)

PARAMETER		TEST CONDITIONS	MIN	TYP	MAX	UNIT
t_{LP-HD}	Delay time, MODE pin falling (low-power mode to high-drive mode)	Settling time to within 50 µV of final value, MODE pin = high to low (LP to HD), V_O = 3.8 V		180		ns
		t_{LP-HD} is defined as the time taken for the quiescent current to increase from 110% of its value in LP mode to 90% of its value in HD mode.		170		ns
t_{HD-LP}	Delay time, MODE pin rising (high-drive mode to low-power mode)	t_{HD-LP} is defined as the time taken for the quiescent current to decrease from 90% of its value in HD mode to 110% of its value in LP mode.		300		ns

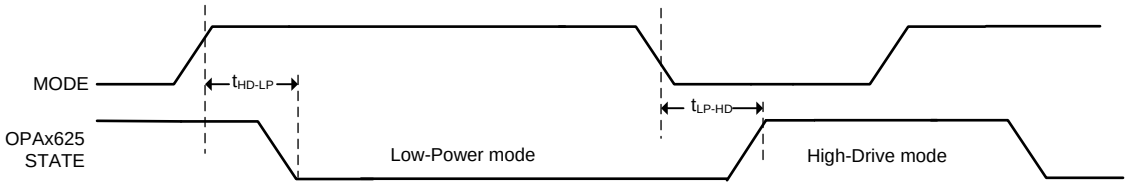

图 1. Switching Characteristics Timing Diagram

6.10 Typical Characteristics

At T_A = 25°C, V+ = 5 V, V– = 0 V, MODE = V–, V_{COM} = V_O = 2.5 V, gain (G) = 2, R_F = 1 kΩ, C_F= 2.7 pF, C_{LOAD}= 20 pF, and R_{LOAD} = 2 kΩ connected to 2.5 V (unless otherwise noted)

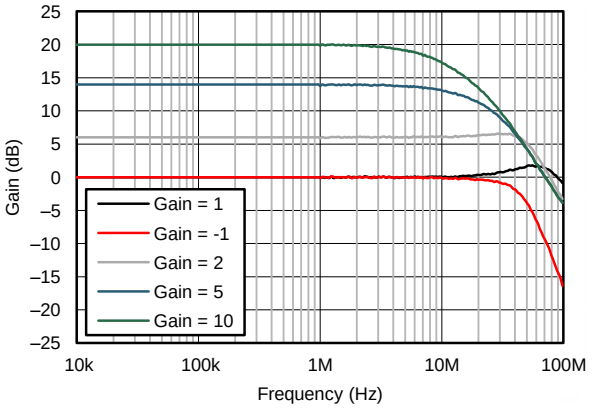

V_O = 10 mV_{PP}

图 2. Small-Signal Frequency Response for Various Gains

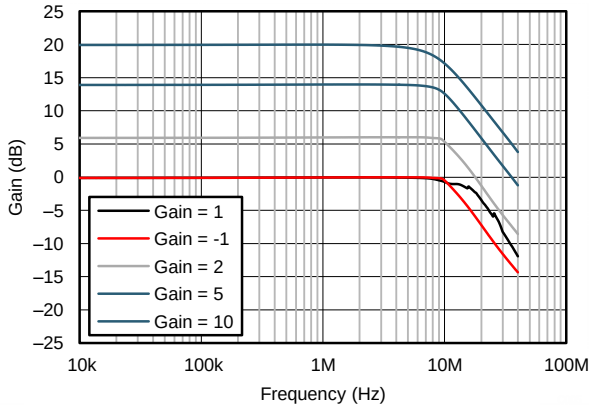

V_O = 2 V_{PP}

图 3. Large-Signal Frequency Response for Various Gains

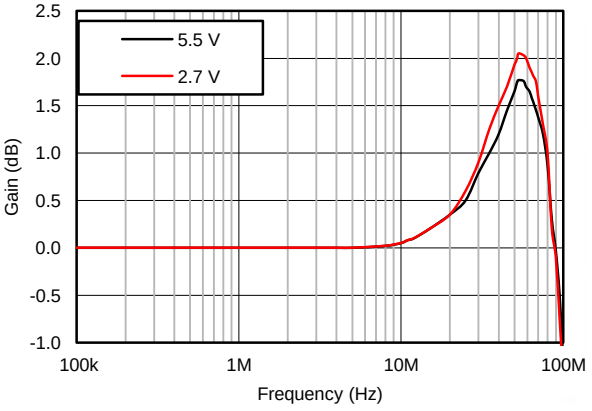

V_O = 10 mV_{PP}, G = 1

图 4. Small-Signal Frequency Response for Various Power Supply Voltages

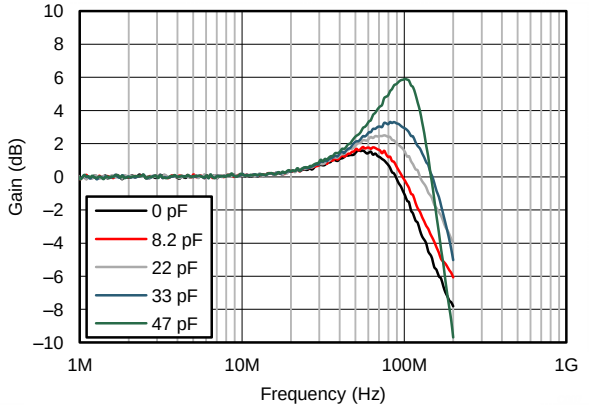

V_O = 10 mV_{PP} , G = 1

图 5. Small-Signal Frequency Response for Various Capacitive Loads

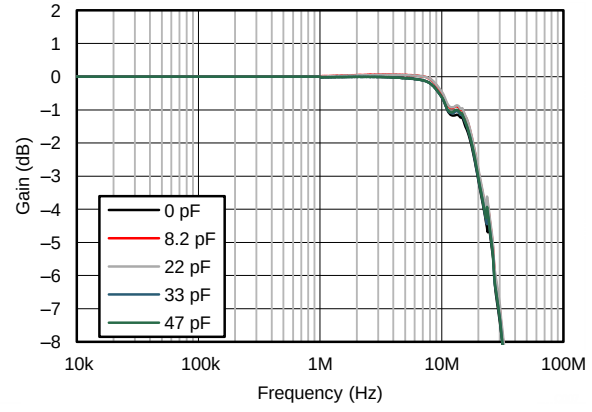

V_O = 2 V_{PP}, G = 1

图 6. Large-Signal Frequency Response for Various Capacitive Loads

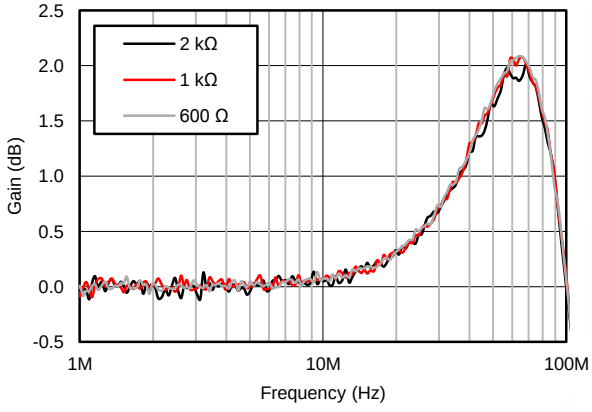

V_O = 10 mV_{PP} , G = 1

图 7. Small-Signal Frequency Response for Various Resistive Loads

版权 © 2015, Texas Instruments Incorporated

Typical Characteristics (接下页)

At T_A = 25°C, V+ = 5 V, V– = 0 V, MODE = V–, V_{COM} = V_O = 2.5 V, gain (G) = 2, R_F = 1 kΩ, C_F= 2.7 pF, C_{LOAD}= 20 pF, and R_{LOAD} = 2 kΩ connected to 2.5 V (unless otherwise noted)

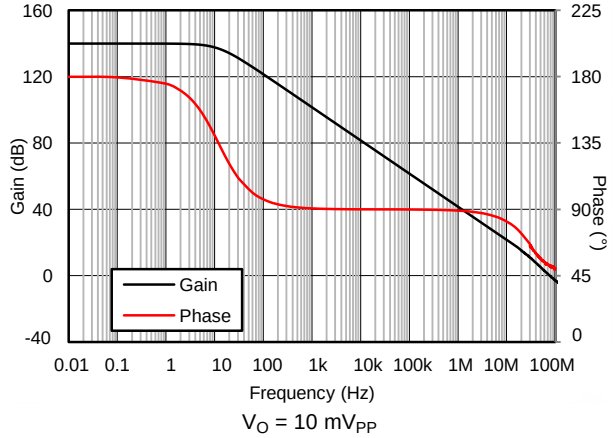

图 8. High-Drive Mode Open-Loop Gain and Phase vs Frequency

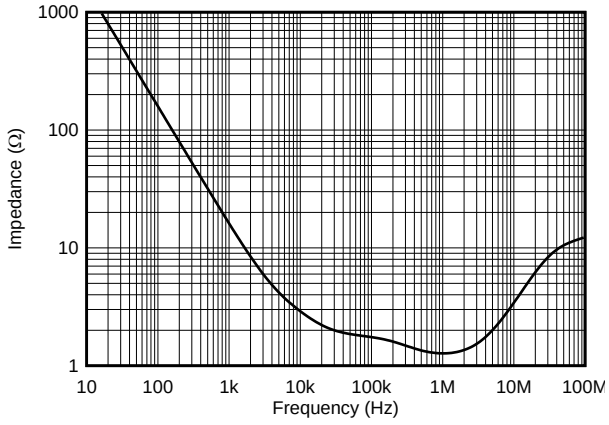

图 9. High-Drive Mode Open-Loop Output Impedance vs Frequency

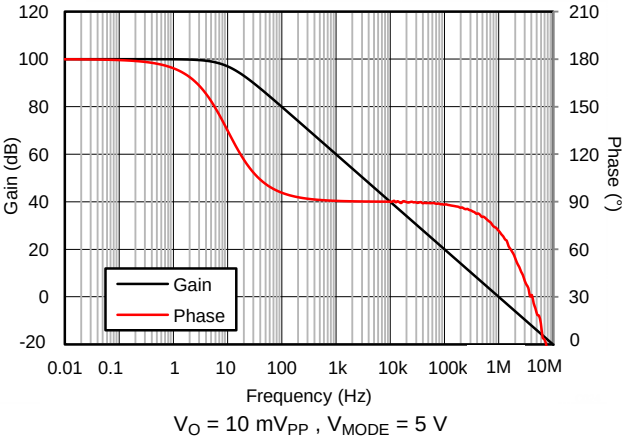

图 10. Low-Power Mode Open-Loop Gain and Phase vs Frequency

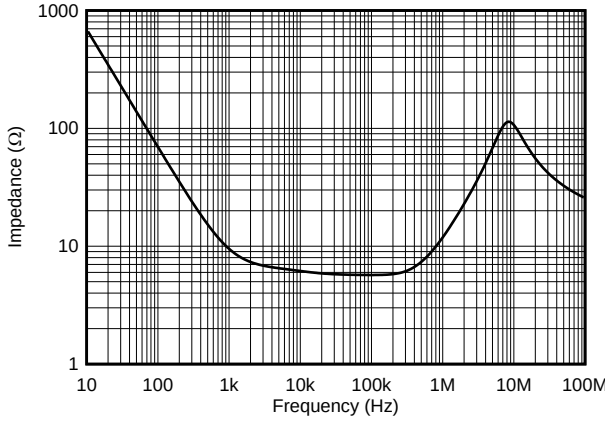

图 11. Low-Power Mode Open-Loop Output Impedance vs Frequency

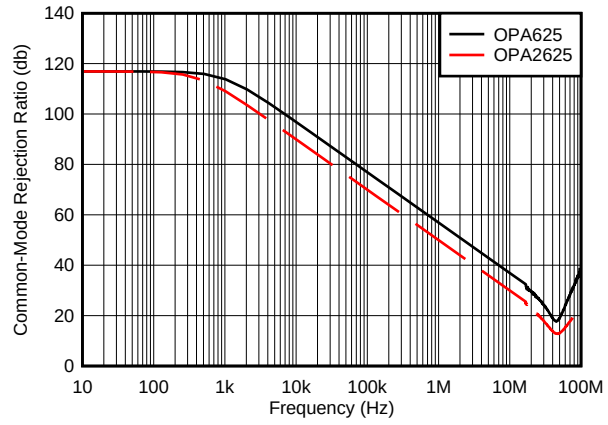

图 12. Common-Mode Rejection Ratio vs Frequency

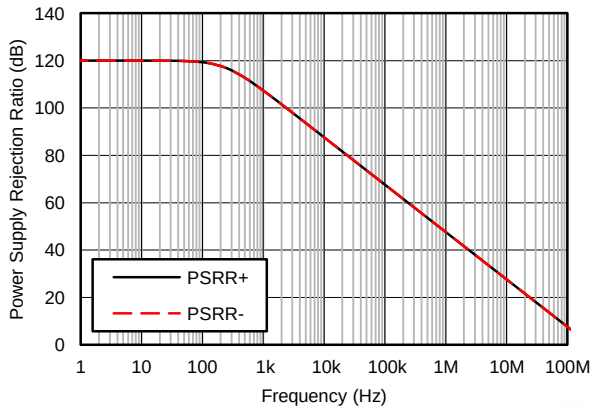

图 13. Power-Supply Rejection Ratio vs Frequency

Typical Characteristics (接下页)

At T_A = 25°C, V+ = 5 V, V– = 0 V, MODE = V–, V_{COM} = V_O = 2.5 V, gain (G) = 2, R_F = 1 kΩ, C_F= 2.7 pF, C_{LOAD}= 20 pF, and R_{LOAD} = 2 kΩ connected to 2.5 V (unless otherwise noted)

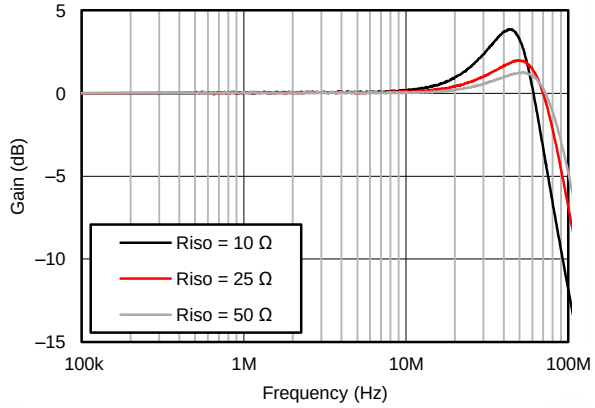

G = 1, C_{LOAD} = 1.2 nF

图 14. Series Resistance for Capacitive Load Stability

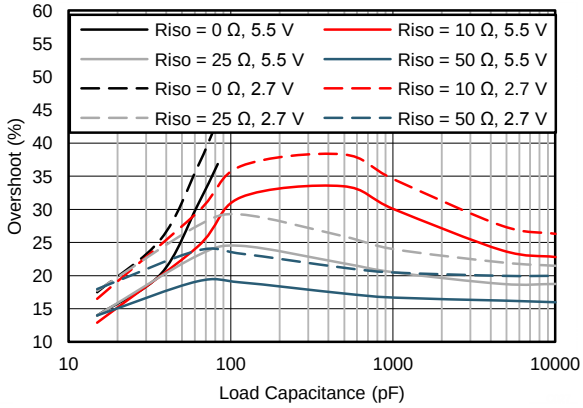

G = 1, V_O = 10 mV_{PP}

图 15. Overshoot vs Capacitive Load, G = 1

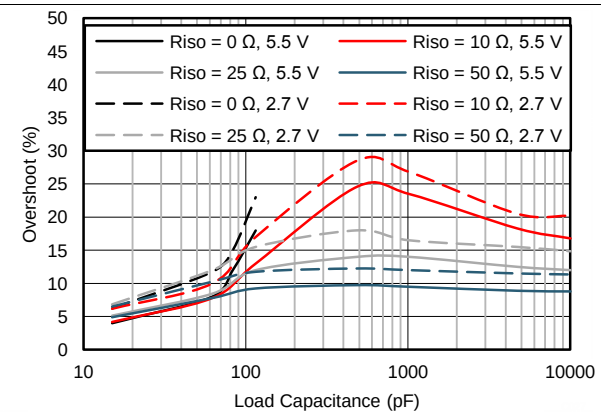

G = –1, V_O = 10 mV_{PP}

图 16. Overshoot vs Capacitive Load, G = –1

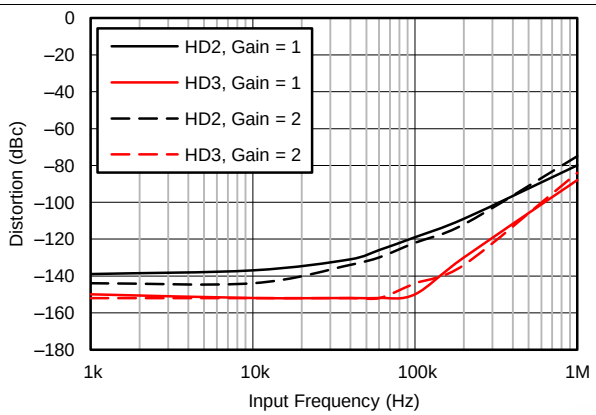

V_S = 5.5 V, V_O = 2 V_{PP}, R_{LOAD} = 600 Ω

图 17. Distortion vs Frequency for Various Gains

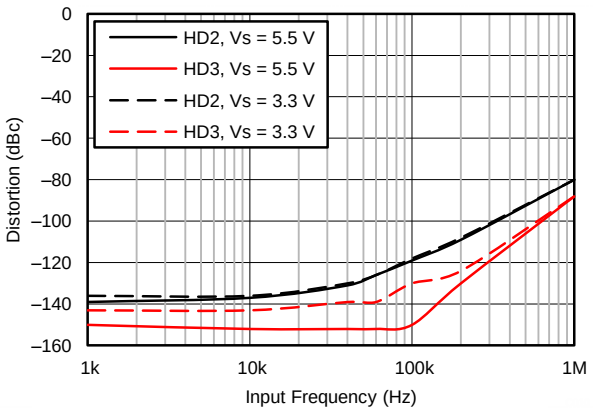

G = 1, V_O = 2 V_{PP}, R_{LOAD} = 600 Ω

图 18. Distortion vs Frequency for Various Power Supplies

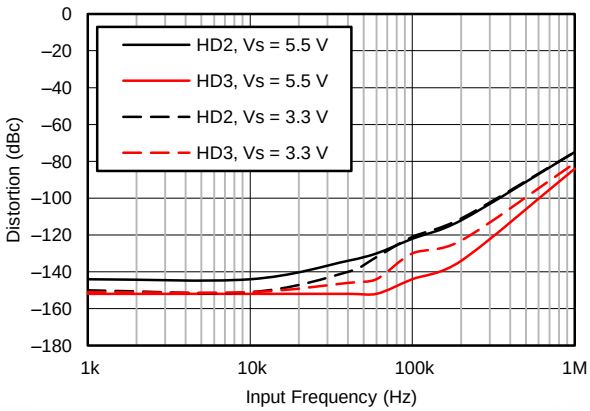

G = 2, V_O = 2 V_{PP}, R_{LOAD} = 600 Ω

图 19. Distortion vs Frequency for Various Power Supplies

版权 © 2015, Texas Instruments Incorporated

Typical Characteristics (接下页)

At T_A = 25°C, V+ = 5 V, V– = 0 V, MODE = V–, V_{COM} = V_O = 2.5 V, gain (G) = 2, R_F = 1 kΩ, C_F= 2.7 pF, C_{LOAD}= 20 pF, and R_{LOAD} = 2 kΩ connected to 2.5 V (unless otherwise noted)

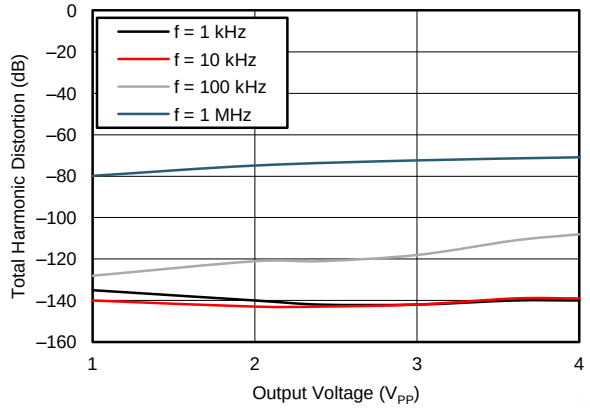

G = 1, R_{LOAD} = 600 Ω

图 20. Total Harmonic Distortion vs Output Voltage for Various Frequencies

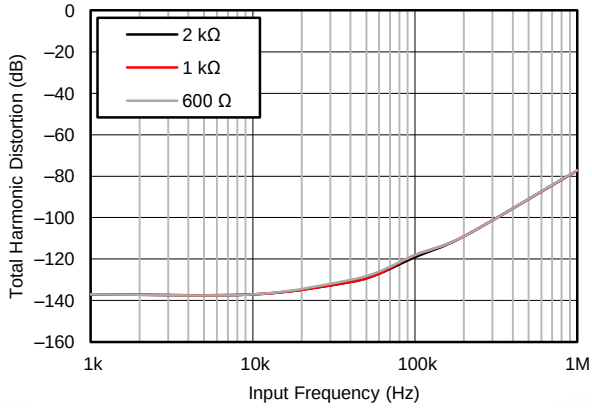

G = 1, V_O = 2 V_{PP} , R_{LOAD} = 600 Ω

图 21. Total Harmonic Distortion vs Frequency for Various Loads

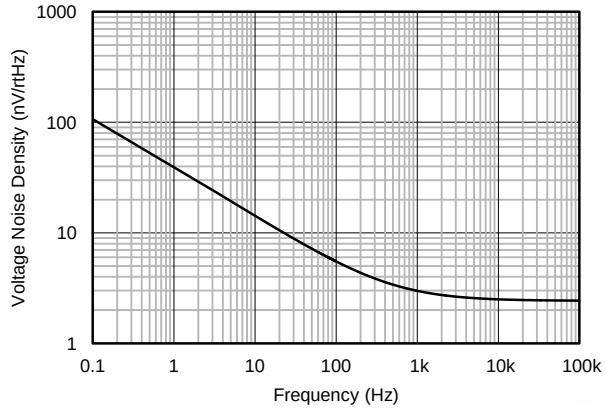

图 22. Voltage Noise Density vs Frequency

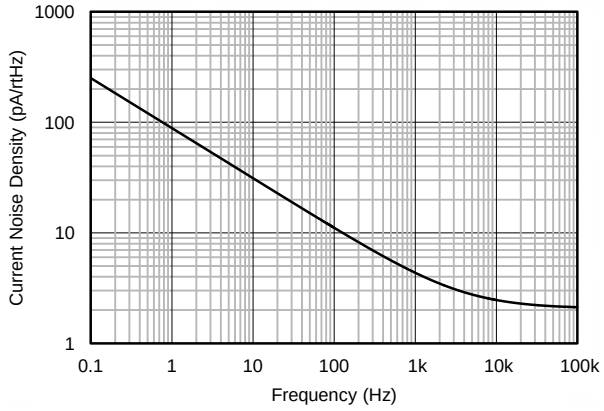

图 23. Current Noise Density vs Frequency

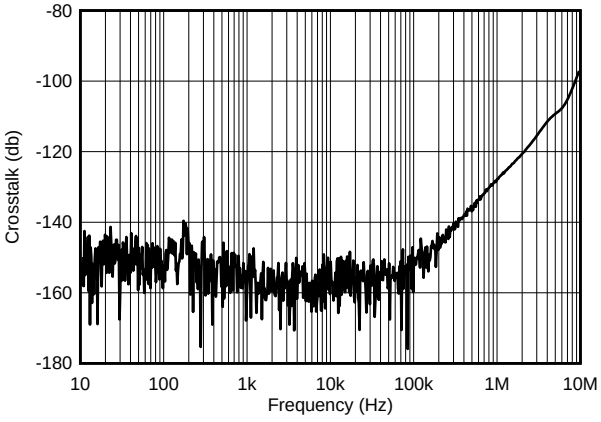

图 24. Crosstalk vs Frequency

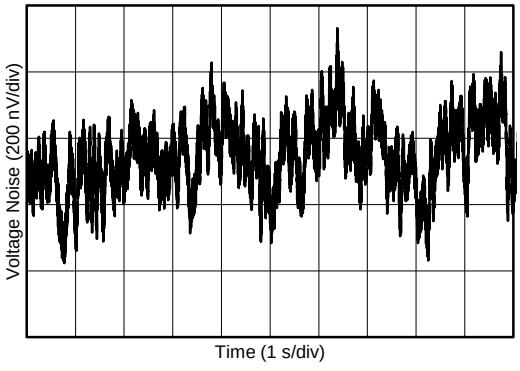

图 25. 0.1-Hz to 10-Hz Voltage Noise

Typical Characteristics (接下页)

At T_A = 25°C, V+ = 5 V, V– = 0 V, MODE = V–, V_{COM} = V_O = 2.5 V, gain (G) = 2, R_F = 1 kΩ, C_F= 2.7 pF, C_{LOAD}= 20 pF, and R_{LOAD} = 2 kΩ connected to 2.5 V (unless otherwise noted)

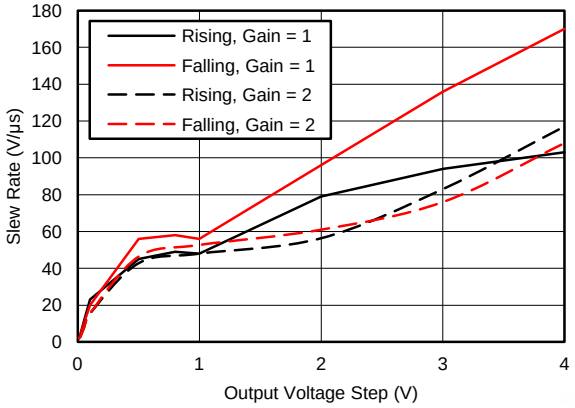

图 26. Slew Rate vs Output Step Size

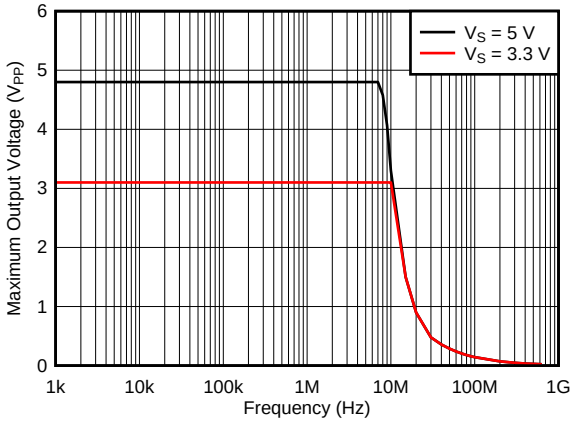

图 27. Maximum Output Voltage vs Frequency

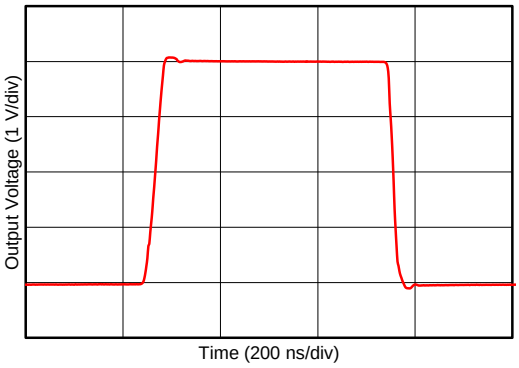

G = 1, V_O = 4-V step

图 28. Large-Signal Pulse Response

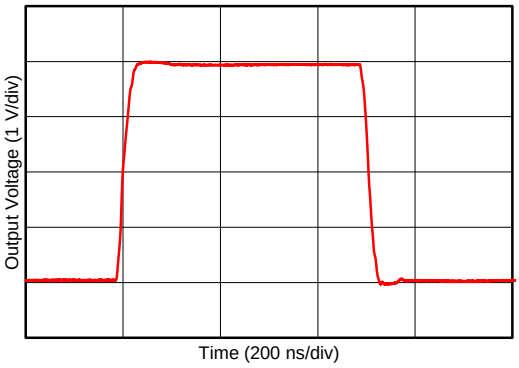

G = –1, V_O = 4-V step

图 29. Large-Signal Pulse Response

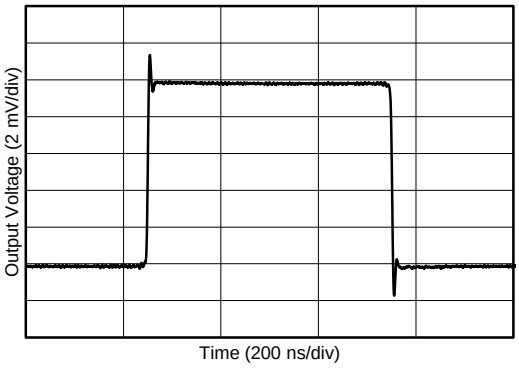

G = 1, V_O = 10-mV step

图 30. Small-Signal Pulse Response

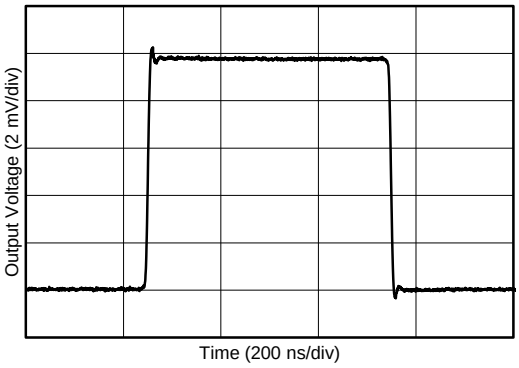

G = –1, V_O = 10-mV step

图 31. Small-Signal Pulse Response

版权 © 2015, Texas Instruments Incorporated

Typical Characteristics (接下页)

At T_A = 25°C, V+ = 5 V, V– = 0 V, MODE = V–, V_{COM} = V_O = 2.5 V, gain (G) = 2, R_F = 1 kΩ, C_F= 2.7 pF, C_{LOAD}= 20 pF, and R_{LOAD} = 2 kΩ connected to 2.5 V (unless otherwise noted)

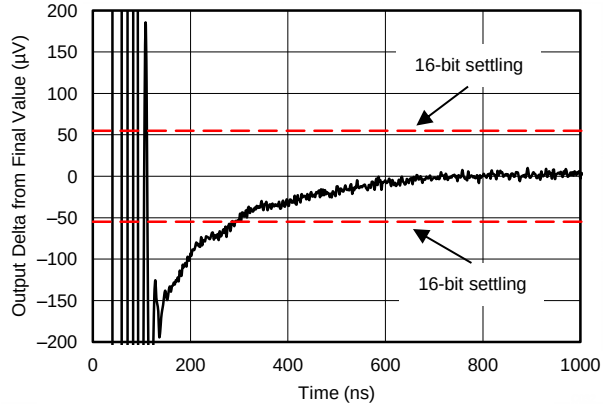

V_O = 3.6-V step at t = 0 s

图 32. 16-Bit Negative Settling Time

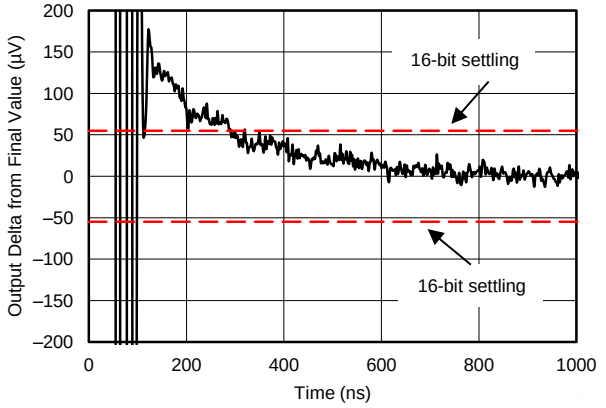

V_O = 3.6-V step at t = 0 s

图 33. 16-Bit Positive Settling Time

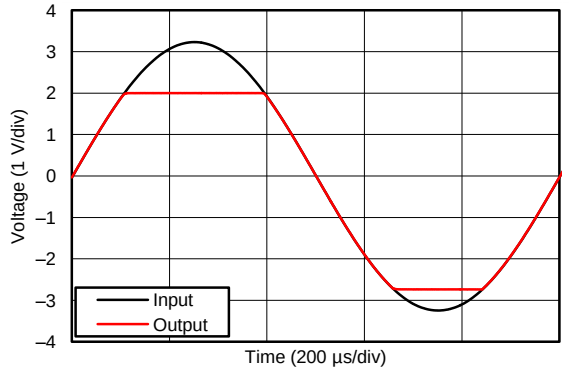

V_S = ±2.75 V, G = 1

图 34. No Phase Reversal

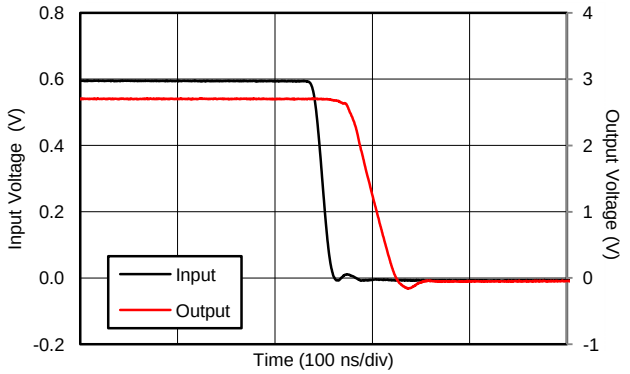

V_S = ±2.75 V, G = 5

图 35. Positive Overload Recovery

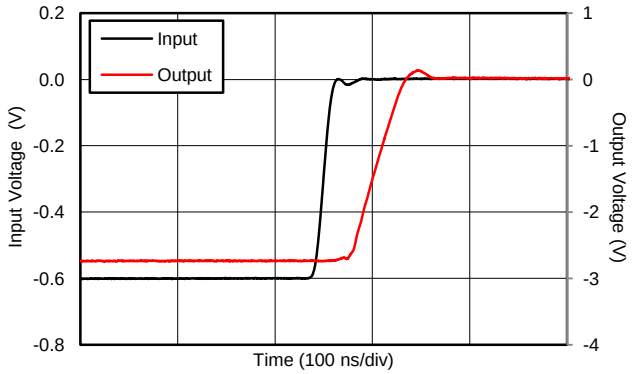

V_S = ±2.75 V, G = 5

图 36. Negative Overload Recovery

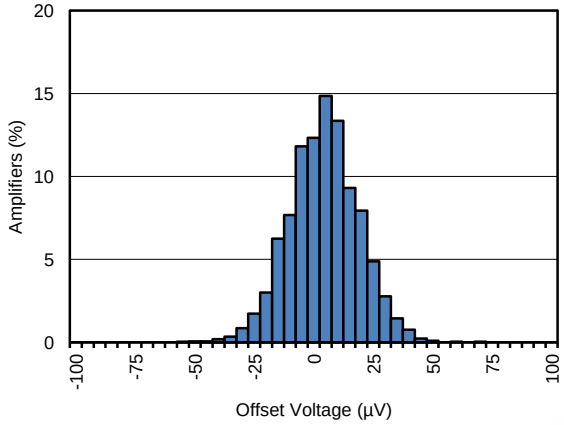

Distribution taken from 3139 amplifiers

图 37. Input Offset Voltage Distribution

Typical Characteristics (接下页)

At T_A = 25°C, V+ = 5 V, V– = 0 V, MODE = V–, V_{COM} = V_O = 2.5 V, gain (G) = 2, R_F = 1 kΩ, C_F= 2.7 pF, C_{LOAD}= 20 pF, and R_{LOAD} = 2 kΩ connected to 2.5 V (unless otherwise noted)

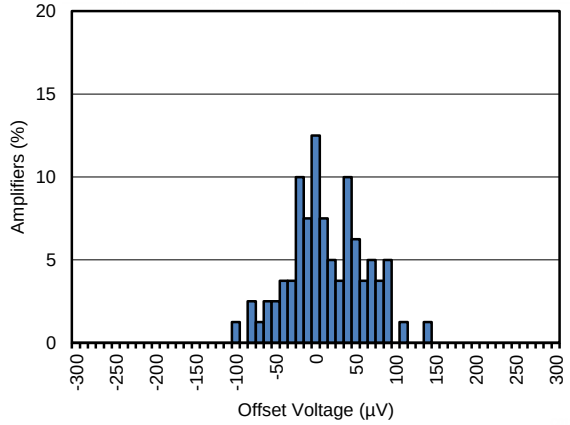

Distribution taken from 80 amplifiers, T_A = 125°C

图 38. Input Offset Voltage Distribution

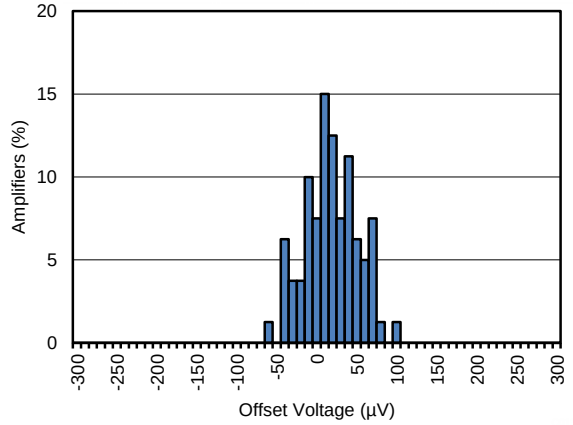

Distribution taken from 80 amplifiers, T_A = 85°C

图 39. Input Offset Voltage Distribution

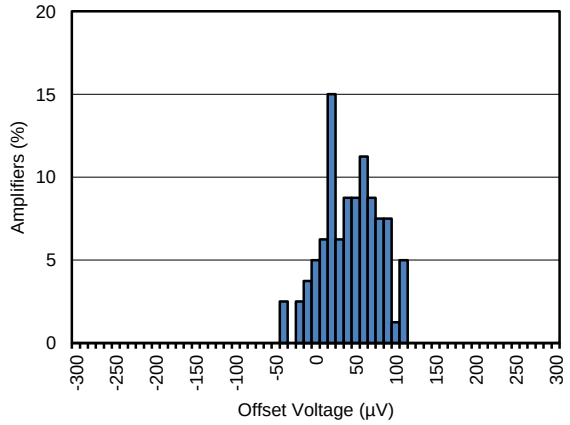

Distribution taken from 80 amplifiers, T_A = –40°C

图 40. Input Offset Voltage Distribution

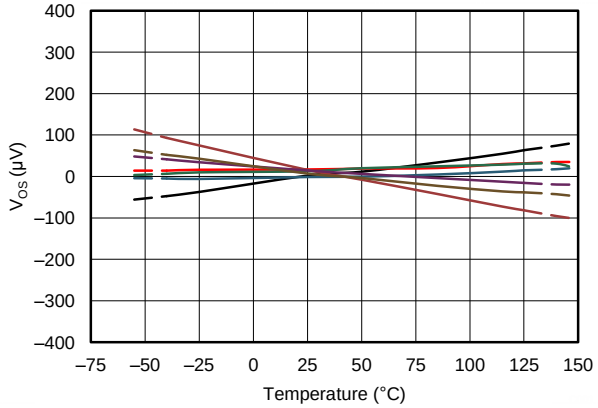

7 typical units shown

图 41. Input Offset Voltage vs Temperature

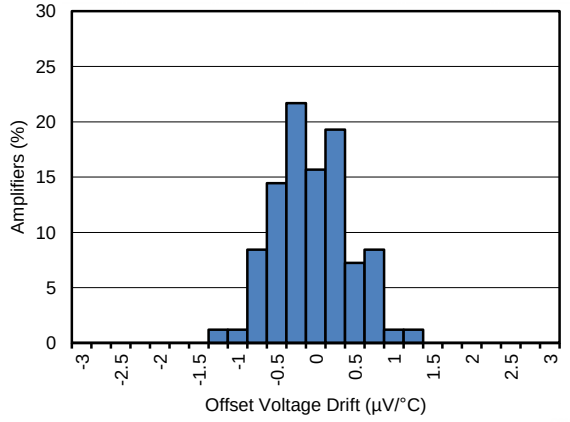

Distribution taken from 83 amplifiers, T_A = –40°C to +125°C

图 42. Input Offset Voltage Drift Distribution

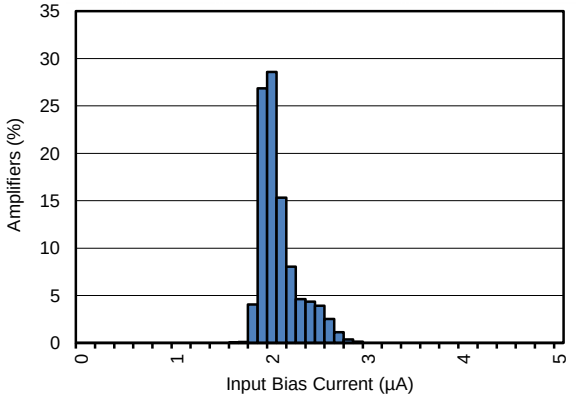

Distribution taken from 3139 amplifiers

图 43. Input Bias Current Distribution

版权 © 2015, Texas Instruments Incorporated

Typical Characteristics (接下页)

At T_A = 25°C, V+ = 5 V, V– = 0 V, MODE = V–, V_{COM} = V_O = 2.5 V, gain (G) = 2, R_F = 1 kΩ, C_F= 2.7 pF, C_{LOAD}= 20 pF, and R_{LOAD} = 2 kΩ connected to 2.5 V (unless otherwise noted)

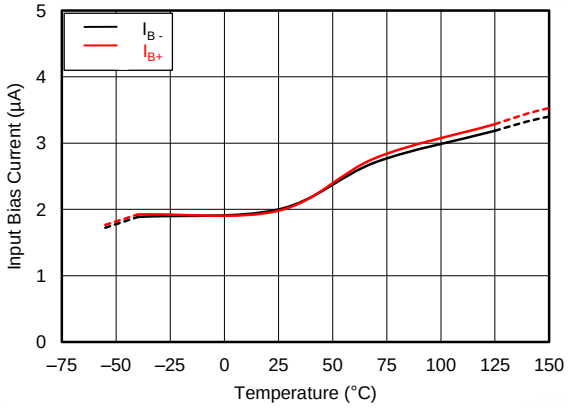

图 44. Input Bias Current vs Temperature

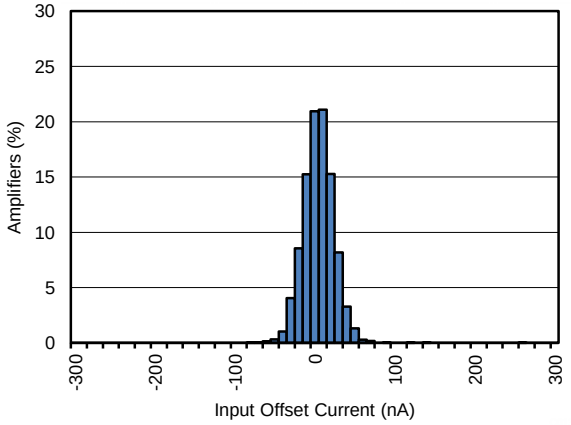

Distribution taken from 3139 amplifiers

图 45. Input Offset Current Distribution

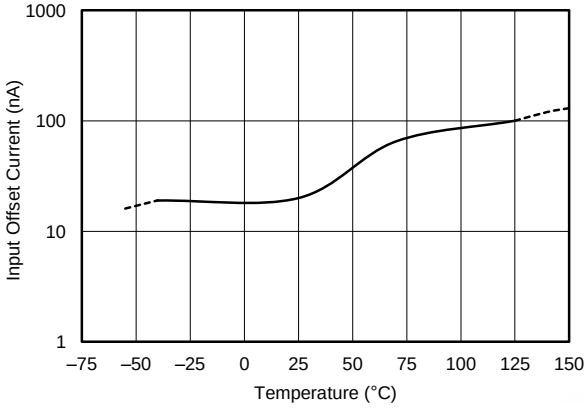

图 46. Input Offset Current vs Temperature

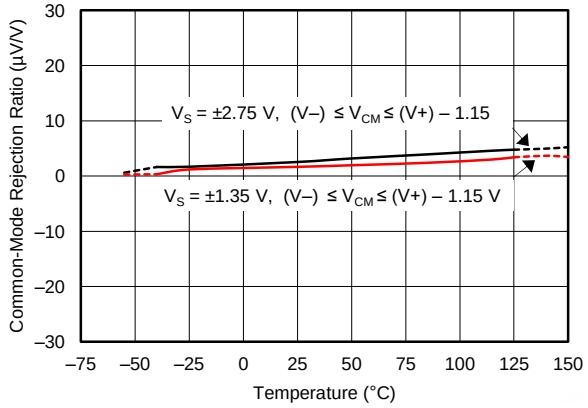

图 47. Common-Mode Rejection Ratio vs Temperature

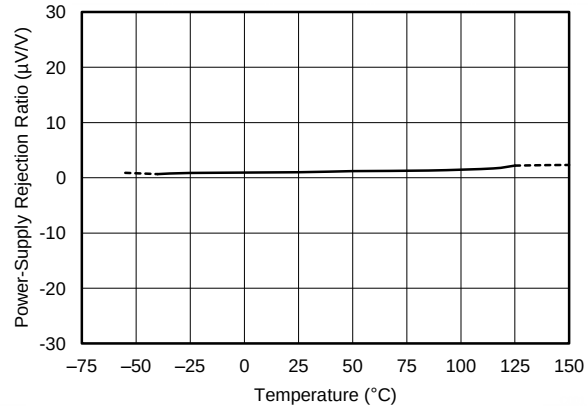

2.7 V ≤ V_S ≤ 5.5 V

图 48. Power-Supply Rejection Ratio vs Temperature

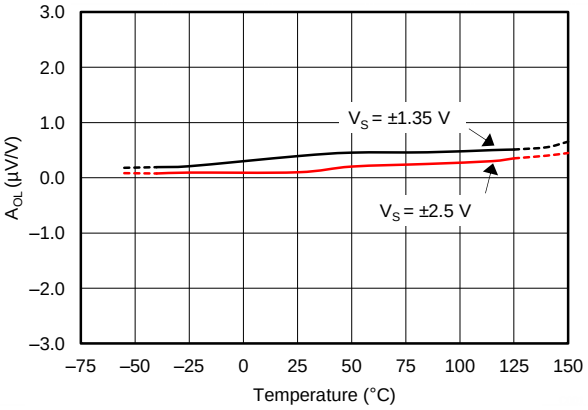

R_{LOAD} = 10 kΩ

图 49. Open-Loop Gain vs Temperature with 10-kΩ Load

Typical Characteristics (接下页)

At T_A = 25°C, V+ = 5 V, V– = 0 V, MODE = V–, V_{COM} = V_O = 2.5 V, gain (G) = 2, R_F = 1 kΩ, C_F= 2.7 pF, C_{LOAD}= 20 pF, and R_{LOAD} = 2 kΩ connected to 2.5 V (unless otherwise noted)

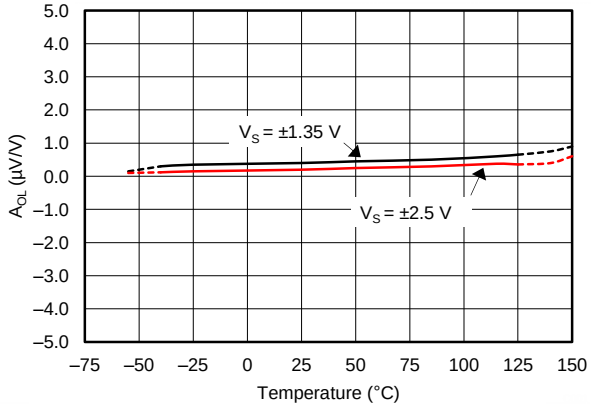

R_{LOAD} = 600 Ω

图 50. Open-Loop Gain vs Temperature with 600-Ω Load

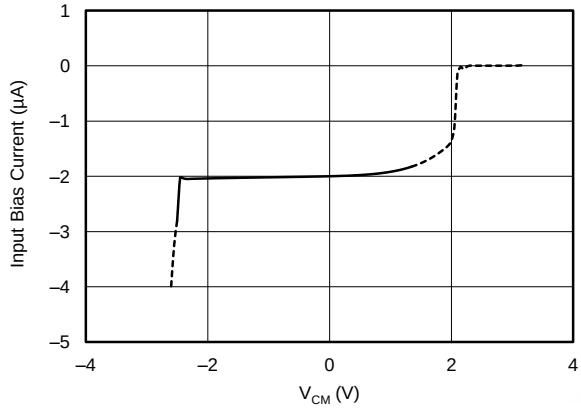

High-drive mode, V_S = ±2.5 V

图 51. Input Bias Current vs Input Common-Mode Voltage

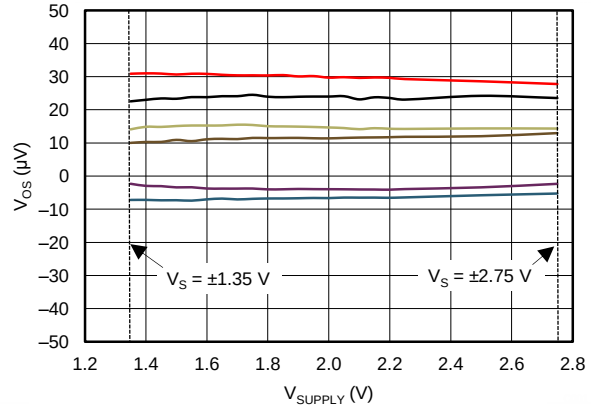

6 typical units shown, V_S = ±1.35 V to ±2.75 V

图 52. Input Offset Voltage vs Power-Supply Voltage

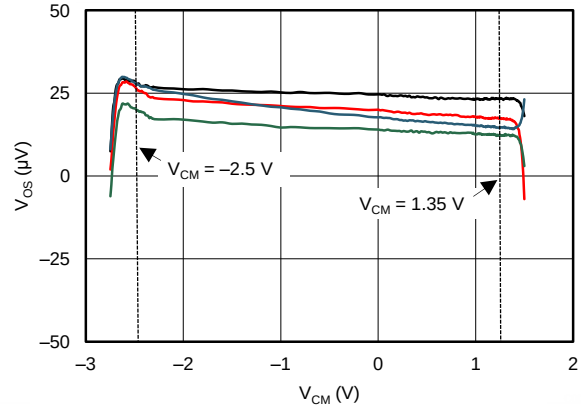

6 typical units shown, V_S = ±2.5 V

图 53. Input Offset Voltage vs Common-Mode Voltage

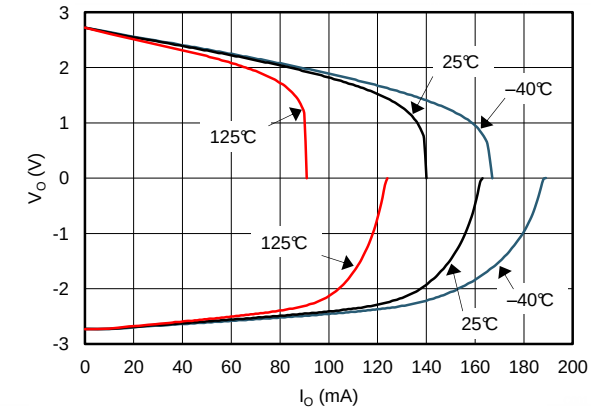

图 54. Output Voltage vs Output Current

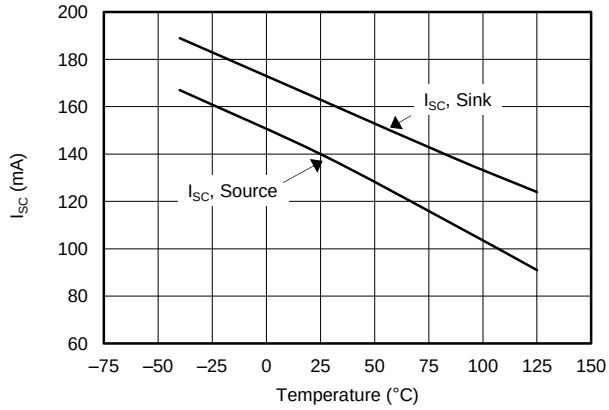

图 55. Short-Circuit Current vs Temperature

版权 © 2015, Texas Instruments Incorporated

Typical Characteristics (接下页)

At T_A = 25°C, V+ = 5 V, V– = 0 V, MODE = V–, V_{COM} = V_O = 2.5 V, gain (G) = 2, R_F = 1 kΩ, C_F= 2.7 pF, C_{LOAD}= 20 pF, and R_{LOAD} = 2 kΩ connected to 2.5 V (unless otherwise noted)

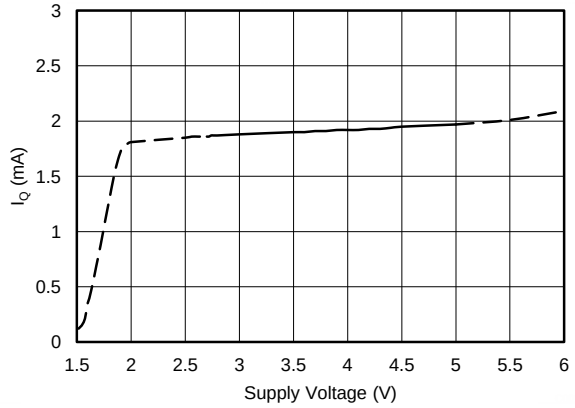

图 56. High-Drive Mode Quiescent Current vs Power-Supply Voltage

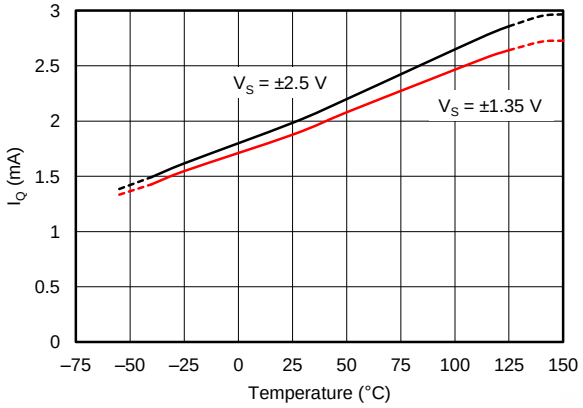

图 57. High-Drive Mode Quiescent Current vs Temperature

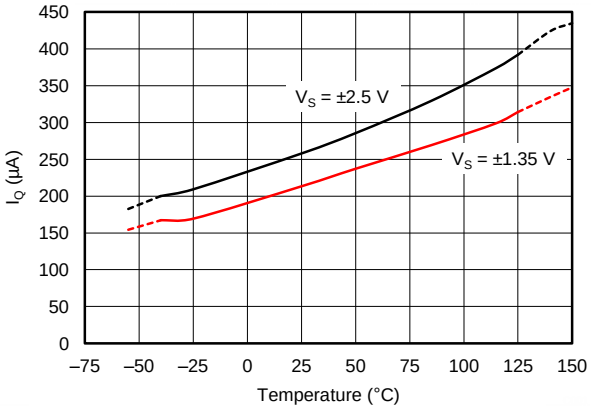

图 58. Low-Power Mode Quiescent Current vs Temperature

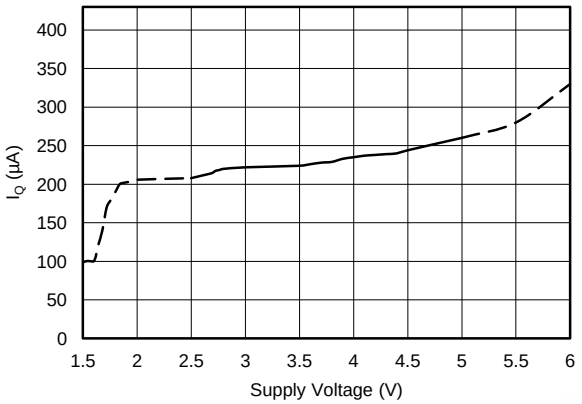

图 59. Low-Power Mode Quiescent Current vs Power-Supply Voltage

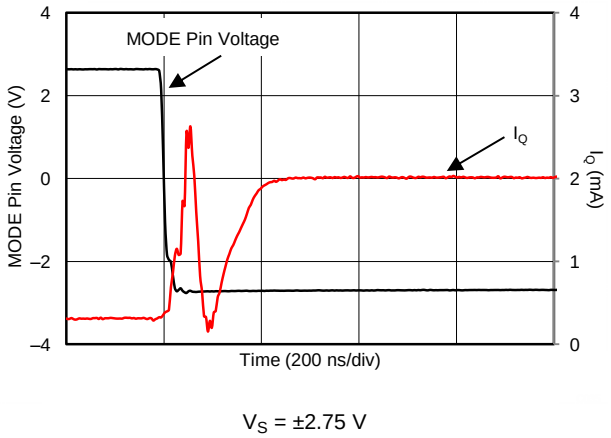

图 60. Quiescent Current When MODE transitions From High To Low

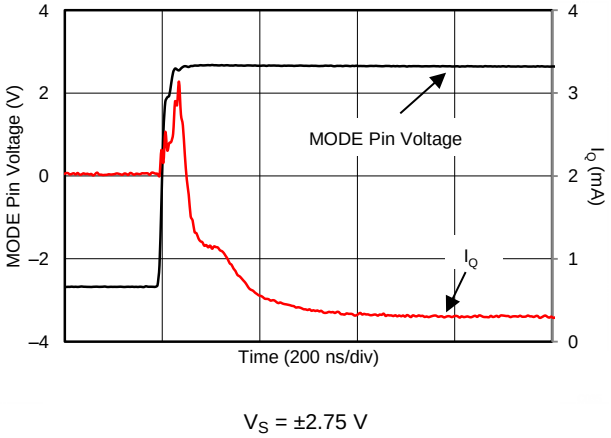

图 61. Quiescent Current When MODE Transitions From Low To High

Typical Characteristics (接下页)

At T_A = 25°C, V+ = 5 V, V– = 0 V, MODE = V–, V_{COM} = V_O = 2.5 V, gain (G) = 2, R_F = 1 kΩ, C_F= 2.7 pF, C_{LOAD}= 20 pF, and R_{LOAD} = 2 kΩ connected to 2.5 V (unless otherwise noted)

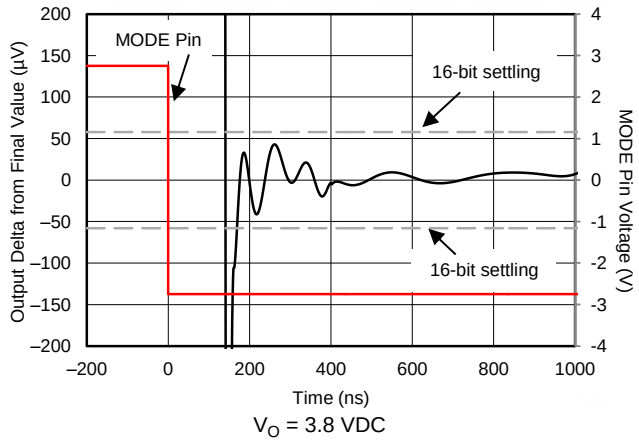

V_O = 3.8 VDC

图 62. Output Voltage When MODE Transitions From High To Low

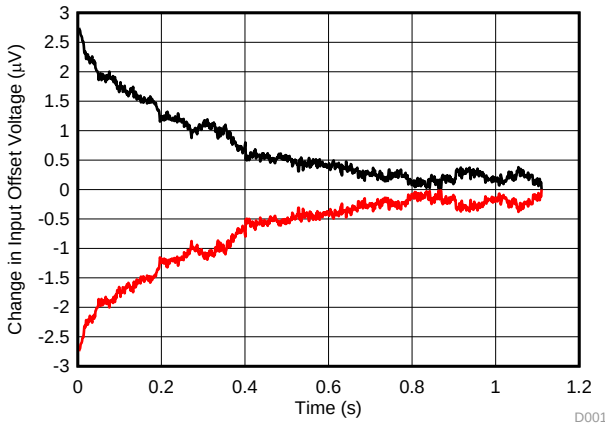

OPA625 powered on in high-drive mode at t = 0 s, PCB dimensions: 4 in^2, 2 layer, FR4

图 63. Warm-Up Time

版权 © 2015, Texas Instruments Incorporated

7 Parameter Measurement Information

7.1 DC Parameter Measurements

The circuit shown in 图 64 is used to measure the dc input offset related parameters of the OPAx625. Input offset voltage, power supply rejection ratio, common mode rejection ratio and open loop gain can be measured with this circuit. The basic test procedure requires setting the inputs (the power-supply voltage, V_S, and the common-mode voltage, V_{CM}), to the desired values. V_O is set to the desired value by adjusting the loop-drive voltage while measuring V_O. After all inputs are configured, measure the input offset at the V_X measurement point. Calculate the input offset voltage by dividing the measured result by 101. Changing the voltages on the various inputs changes the input offset voltage. The input parameters can be measured according to the relationships illustrated in 公式 1 through 公式 5.

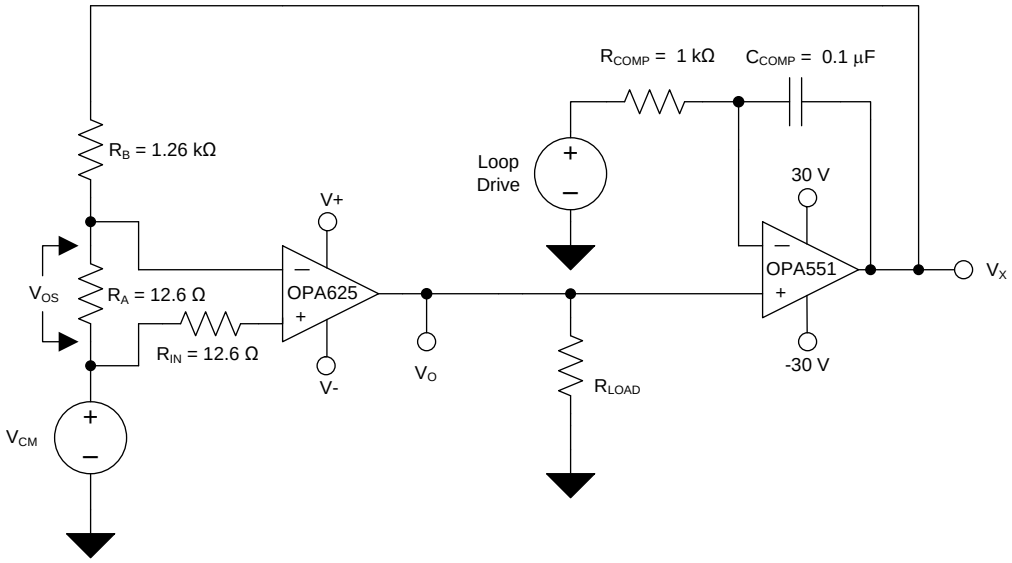

图 64. DC-Parameters Measurement Circuit

$$V_{OS} = \frac{V_X}{101} \quad (1)$$

$$V_{OSDrift} = \frac{\Delta V_{OS}}{\Delta Temperature} \quad (2)$$

$$PSRR = \frac{\Delta V_{OS}}{\Delta V_{SUPPLY}} \quad (3)$$

$$CMRR = \frac{\Delta V_{OS}}{\Delta V_{CM}} \quad (4)$$

$$AOL = \frac{\Delta V_O}{\Delta V_{OS}} \quad (5)$$

7.2 Transient Parameter Measurements

The circuit shown in 图 65 is used to measure the transient response of the OPAx625. Configure V+, V–, R_{ISO}, R_{LOAD}, and C_{LOAD} as desired. Monitor the input and output voltages on an oscilloscope or other signal analyzer. Use this circuit to measure large-signal and small-signal transient response, slew rate, overshoot, and capacitive-load stability.

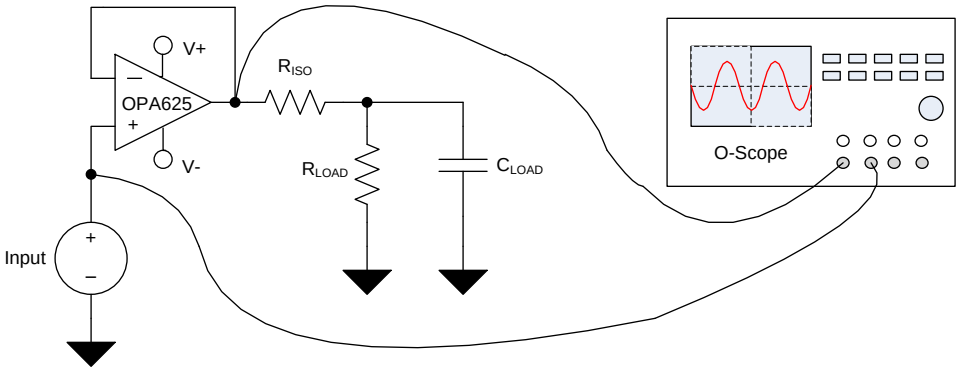

图 65. Pulse-Response Measurement Circuit

7.3 AC Parameter Measurements

The circuit shown in 图 66 is used to measure the ac parameters of the OPAx625. Configure V+, V–, and C_{LOAD} as desired. The THS4271 are used to buffer the input and output of the OPAx625 to prevent loading by the gain phase analyzer. Monitor the input and output voltages on a gain phase analyzer. Use this circuit to measure the gain bandwidth product, and open-loop gain versus frequency versus capacitive load.

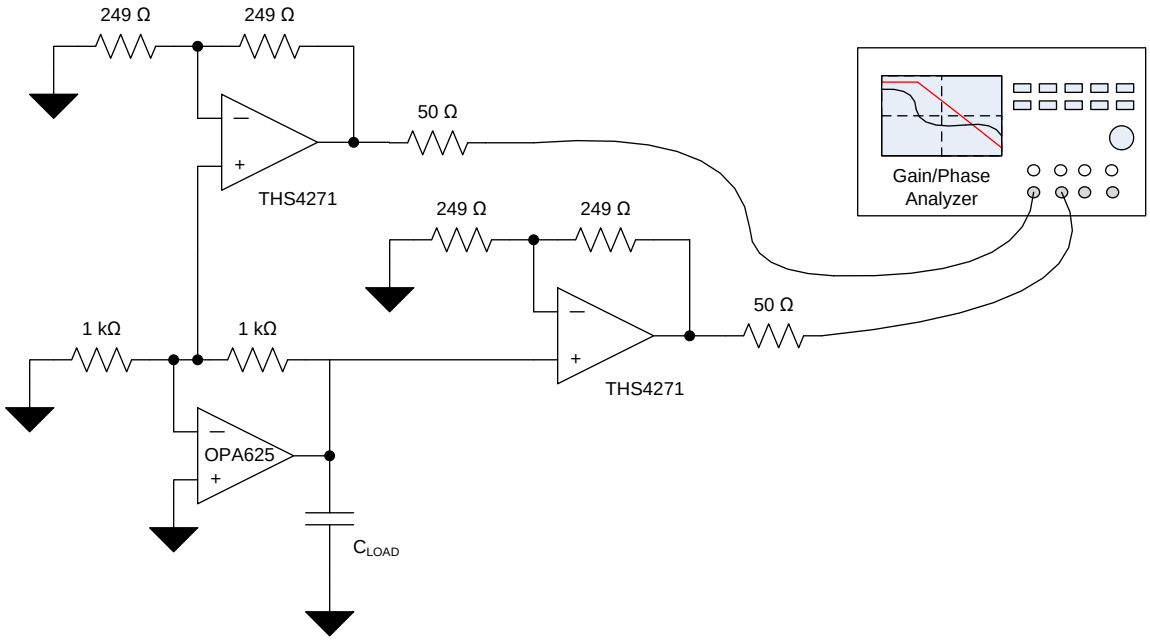

图 66. AC-Parameters Measurement Circuit

版权 © 2015, Texas Instruments Incorporated

7.4 Noise Parameter Measurements

The circuit shown in 图 67 is used to measure the voltage noise of the OPAx625. Configure V+, V–, and C_{LOAD} as desired.

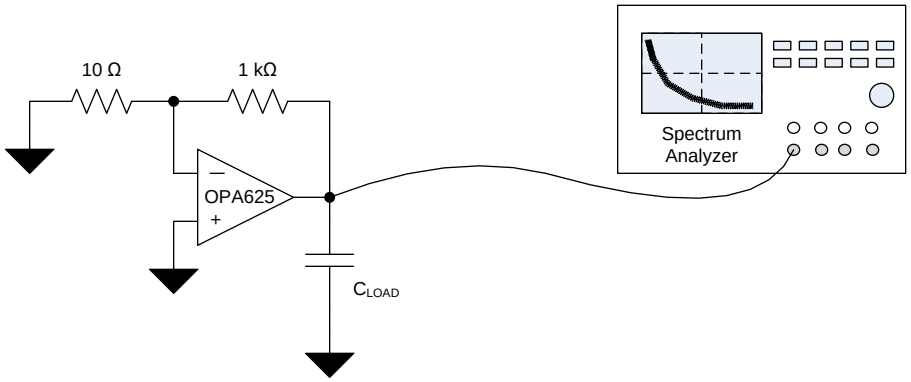

图 67. Voltage Noise Measurement Circuit

The circuit shown in 图 68 is used to measure the current noise of the OPAx625. Configure V+, V– and C_{LOAD} as desired.

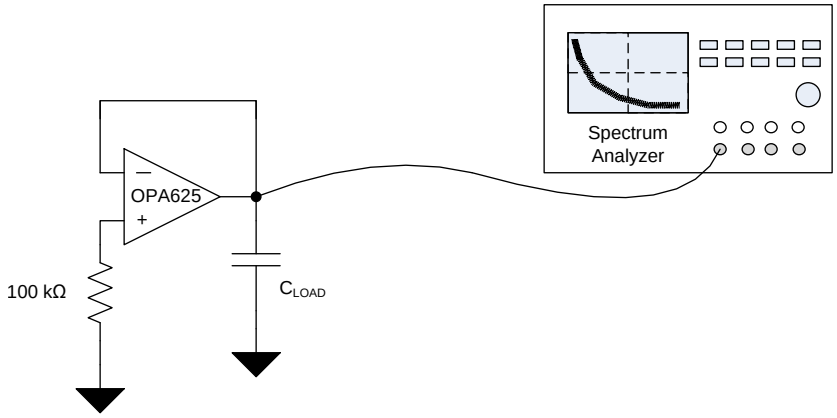

图 68. Current Noise Measurement Circuit

The circuit shown in 图 69 is used to measure the OPAx625 0.1-Hz to 10-Hz voltage noise. Configure V+, V–, and C_{LOAD} as desired.

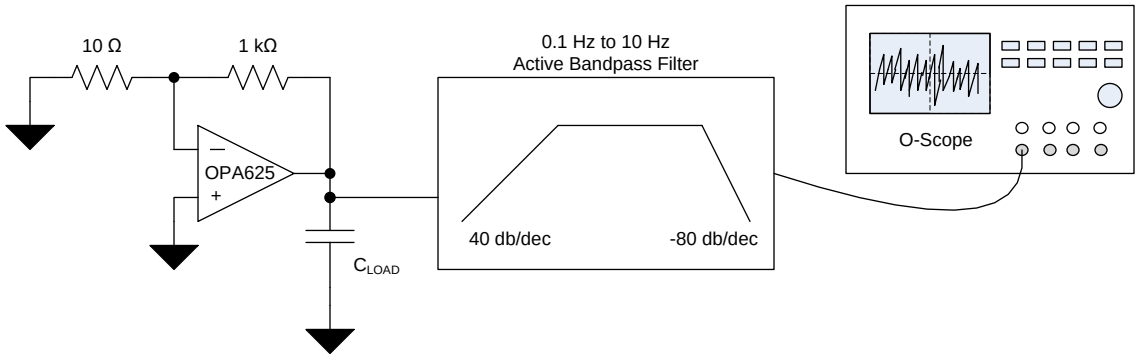

图 69. 0.1-Hz to 10-Hz Voltage-Noise Measurement Circuit

8 Detailed Description

8.1 Overview

The OPAx625 is a fast-settling, high slew rate, high-bandwidth, voltage-feedback operational amplifier. Low offset and low offset drift combine with the superior dynamic performance and very low output impedance, resulting in an amplifier suited for driving 16-bit SAR ADCs, and buffering precision voltage references in industrial applications. The OPAx625 is comprised of a low-noise input stage, a slew boost stage, and a rail-to-rail output stage. A mode bias select feature allows the OPAx625 to be configured in a high-drive mode and a low-power mode. High-drive mode is used when driving SAR ADCs during the ADC signal acquisition period. The OPAx625 is also configurable in low-power mode while the SAR ADC is converting the acquired signal, thus saving overall system power. To facilitate a fast transition from low-power mode to high-drive mode, the OPAx625 does not completely shut down while in low-power mode; rather, the device remains as an active amplifier with a lower bandwidth (1 MHz) and relaxed dc specifications.

8.2 Functional Block Diagram

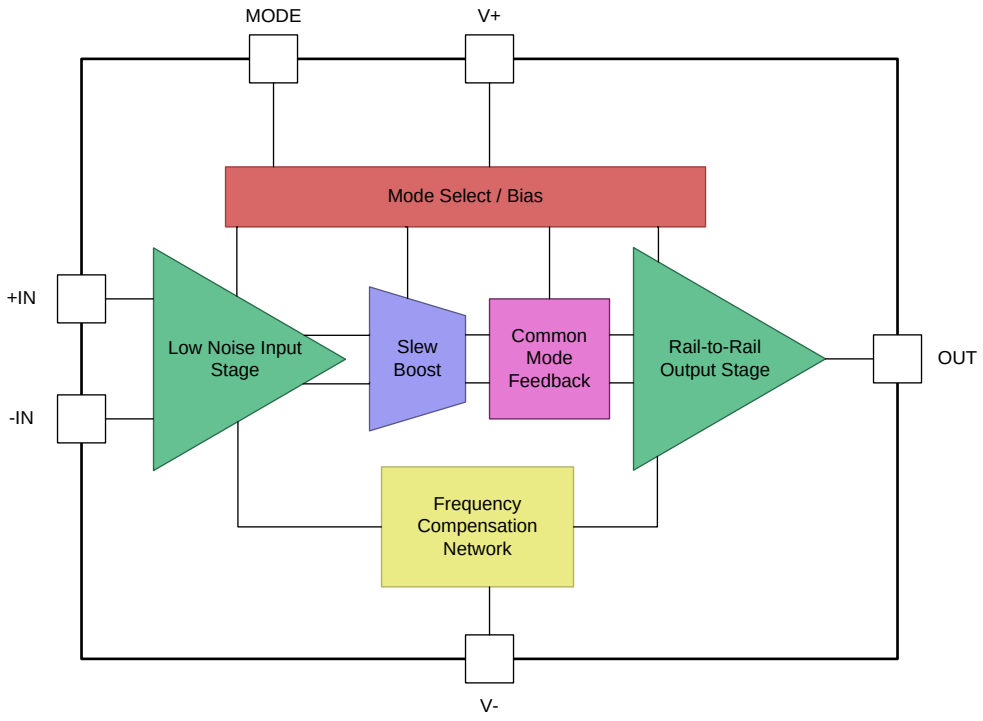

版权 © 2015, Texas Instruments Incorporated

8.3 Feature Description

8.3.1 SAR ADC Driver

The OPAx625 is designed to drive precision (16-bit and 18-bit) SAR ADCs at sample rates up to 1 MSPS. The combination of low output impedance, low THD, low noise, and fast settling time make the OPAx625 the ideal choice for driving both the SAR ADC inputs, as well as the reference input to the ADC. Internal slew boost circuitry increases the slew rate as a function of the input signal magnitude, resulting in settling from a 4-V step input to 16-bit levels within 280 ns. Low output impedance (1 Ω at 1 MHz) ensures capacitive load stability with minimal overshoot.

8.3.2 Electrical Overstress

Designers often ask questions about the capability of an operational amplifier to withstand electrical overstress (EOS). These questions tend to focus on the device inputs, but may involve the supply voltage pins or even the output pin. Each of these different pin functions have electrical stress limits determined by the voltage breakdown characteristics of the particular semiconductor fabrication process and specific circuits connected to the pin. Additionally, internal electrostatic discharge (ESD) protection is built into these circuits to protect them from accidental ESD events both before and during product assembly. Having a good understanding of this basic ESD circuitry and its relevance to an electrical overstress event is helpful. See 图 70 for an illustration of the ESD circuits contained in the OPAx625. The ESD protection circuitry involves several current-steering diodes connected from the input and output pins and routed back to the internal power-supply lines, where the diodes meet at an absorption device or the power-supply ESD cell, internal to the operational amplifier. This protection circuitry is intended to remain inactive during normal circuit operation.

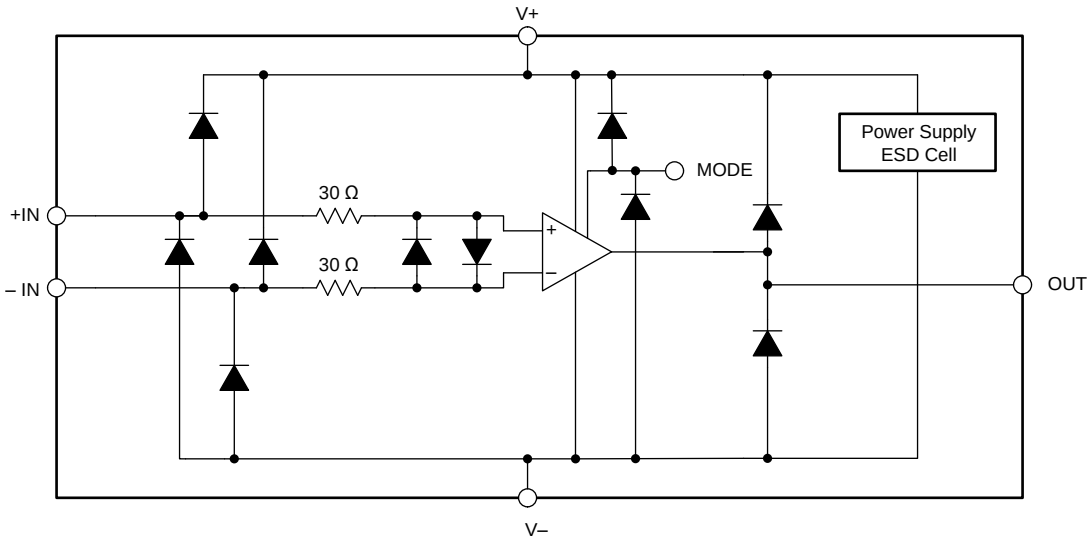

图 70. Simplified ESD Circuit

8.4 Device Functional Modes

The OPAx625 has two functional modes: high-drive and low-power. In low-power mode, the quiescent current of the OPAx625 is reduced to 270 µA (typ), and results in significantly lower bandwidth, higher noise, and lower output current drive. The OPAx625 transitions from low-power mode to high-drive mode in 170 ns.

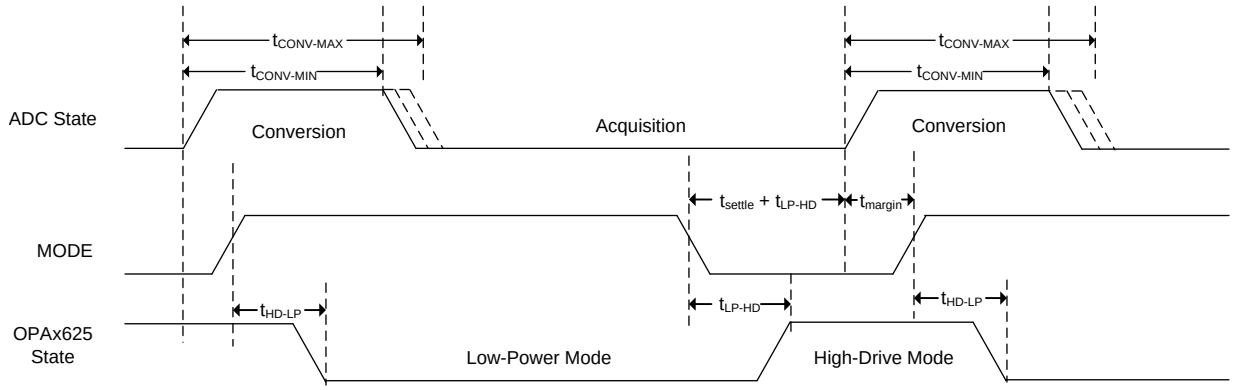

图 71. Simplified Timing Diagram: Power-Scaling Precision Signal Chain

8.4.1 High-Drive Mode

Place the OPAx625 into high-drive mode by applying a logic level low to the MODE pin. The MODE pin can be driven by a general-purpose input/output (GPIO) from the system controller, from discrete logic gates, or can be connected directly to the V– pin. Do not leave the MODE pin floating. When driving the MODE pin from a microcontroller GPIO, make sure that the GPIO is not placed into a high-impedance state. Placing the GPIO into a high impedance state results in the MODE pin essentially floating, and is not recommended. Do not drive the MODE pin voltage below the voltage at the V– pin; see the Absolute Maximum Ratings for the allowable voltage to drive the MODE pin. Use the MODE pin to force the OPAx625 in either the high-drive mode or the low-power mode. The OPAx625 has 120-MHz gain bandwidth, 2.5-nV/√Hz input-referred noise, and consumes just 2 mA of quiescent current in high-drive mode. In addition, the OPAx625 also has an offset voltage of 100 µV (max) and offset voltage drift of 1 µV/°C (typ). This combination of high precision, high speed, and low noise makes this device suitable for use as an input driver for high-precision, high-throughput SAR ADCs such as ADS88xx family of SAR ADC, as shown in 图 73.

In high-drive mode, the OPAx625 is fully specified as a wideband, low-noise, low-distortion precision amplifier. High-drive mode is the primary mode of operation of the OPAx625 when driving the inputs of a SAR ADC during the signal acquisition period just before the start of the conversion period. Placing the OPAx625 into the high-drive mode before the acquisition period is complete, and before the start of the conversion period, allows the OPAx625 to settle to the final value just prior to the conversion. When the ADC is converting the input signal, and therefore no longer acquiring the signal, place the OPAx625 into the low-power mode to reduce system power. Using low-power mode allows the OPAx625 power consumption to scale directly with the sample rate.

The OPAx625 is unique in that the switching between the modes occurs in 170 ns (typ). This fast switching is achieved by the architecture of the OPAx625 during low-power mode; see the *Low-Power Mode* section for more information.

版权 © 2015, Texas Instruments Incorporated

Device Functional Modes (接下页)

8.4.2 Low-Power Mode

Place the OPAx625 low-power mode by applying a logic level high to the MODE pin. The MODE pin can be driven by a GPIO from the system controller, from discrete logic gates, or can be connected to directly to the V+ pin. Do not leave the MODE pin floating. When driving the MODE pin from a microcontroller GPIO, make sure that the GPIO is not placed into a high-impedance state. Placing the GPIO into a high-impedance state results in the MODE pin essentially floating, and is not recommended. Do not allow the MODE pin voltage to exceed the voltage at the V+ pin; see the Absolute Maximum Ratings for the allowable voltage to drive the MODE pin.

In low-power mode, the OPAx625 is fully specified as a general-purpose operational amplifier. The MODE signal can be controlled so that the OPAx625 is placed in high-drive mode just before the ADC enters the acquisition phase. This configuration makes sure that the voltage on the antialiasing filter capacitor settles to the required precision before the acquisition period is complete. The power consumed by the OPAx625 scales with the throughput of the system when operated in this manner. This feature is extremely useful in power-critical applications and variable-throughput data acquisition systems.

The OPAx625 is unique in that the switching between the modes occurs in 170 ns (typ). This fast switching is achieved by the architecture of the OPAx625 during low-power mode. Most amplifiers in power-down or shut-down mode consume very minimal power, but are also not operating in a linear fashion. For example, the output of a typical amplifier, when disabled, can be placed into a high-impedance state, and thus unable to drive any load whatsoever. Switching from a shut-down state to a linear state requires charging internal capacitances and bias points to a level within the linear operating range. Typically, this switch can take several microseconds or longer. This problem is solved with the OPAx625. The OPAx625 operates as a linear operational amplifier in low-power mode, and the output tracks the input signal, but with a lower bandwidth and slightly higher offset and noise. Switching from low-power mode to high-drive mode and settling to 16-bit levels occurs in 170 ns (typ) as a result of maintaining operation in a linear fashion throughout the duration of each mode. This configuration allows for dynamic power scaling, while still maintaining high throughput rates.

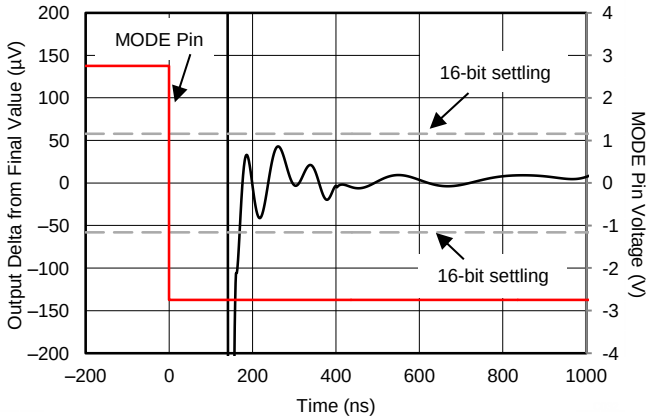

图 72. Output Voltage when Mode Pin Changes High to Low

9 Application and Implementation

注

Information in the following applications sections is not part of the TI component specification, and TI does not warrant its accuracy or completeness. TI's customers are responsible for determining suitability of components for their purposes. Customers should validate and test their design implementation to confirm system functionality.

9.1 Application Information

The OPAx625 is a precision, high-speed, voltage-feedback operational amplifier. Fast settling to 16-bit levels, low THD, and low noise make the OPAx625 suitable for driving SAR ADC inputs and buffering precision voltage references. With a wide power-supply voltage range from 2.7 V to 5.5 V, and operating from –40°C to +125°C, the OPAx625 is suitable for a variety of high-speed, industrial applications. The following sections show application information for the OPAx625. For simplicity, power-supply decoupling capacitors are not shown in these diagrams.

9.2 Typical Applications

9.2.1 Single-Supply, 16-Bit, 1-MSPS SAR ADC Driver

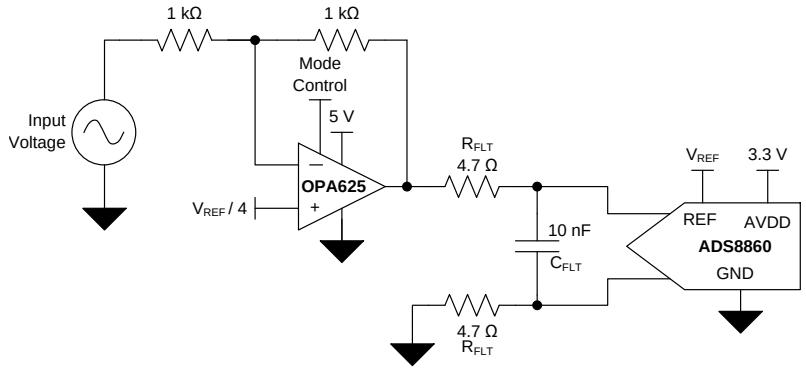

图 73. Single-Supply, 16-Bit, 1-MSPS SAR ADC Driver

9.2.1.1 Design Requirements

SAR ADCs, such as the ADS8860, use sampling capacitors on the data converter input. During the signal acquisition phase, these sampling capacitors are connected to the ADC analog input terminals, AINP and AINN, through a set of switches. After the acquisition period has elapsed, the internal sampling capacitors are disconnected from the input terminals and connected to the input of the ADC through a second set of switches, during this period the ADC is performing the analog-to-digital conversion. 图 74 illustrates this architecture.

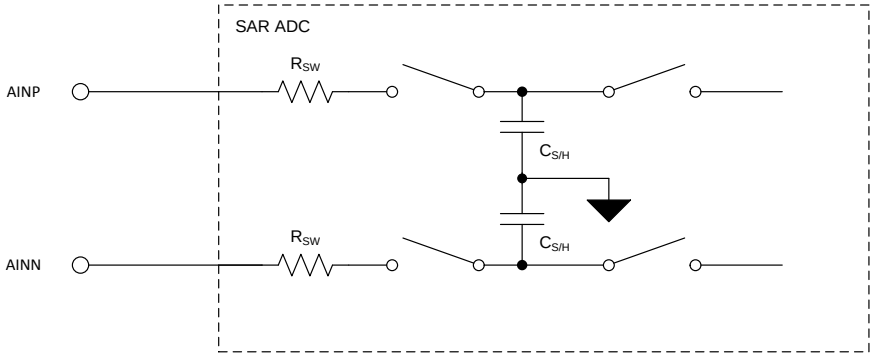

图 74. Simplified SAR ADC Input

版权 © 2015, Texas Instruments Incorporated

Typical Applications (接下页)

The SAR ADC inputs and sampling capacitors must be driven by the OPA625 to 16-bit levels within the acquisition time of the ADC. For the example illustrated in 图 73, the OPA625 is used to drive the ADS8860 at a sample rate of 1 MSPS.

9.2.1.2 Detailed Design Procedure

The circuit illustrated in 图 73 consists of the SAR ADC driver, a low-pass filter and the SAR ADC. The SAR ADC driver circuit consists of an OPA625 configured in an inverting gain of 1. The filter consists of R_{FLT} and C_{FLT}, connected between the output of the OPA625 and input of the ADS8860. Selecting the proper values for each of these passive components is critical to obtain the best performance from the ADC. Capacitor C_{FLT} serves as a charge reservoir, providing the necessary charge to the ADC sampling capacitors. The dynamic load presented by the ADC creates a glitch on the filter capacitor, C_{FLT}. To minimize the magnitude of this glitch, choose a value for C_{FLT} large enough to maintain a glitch amplitude of less than 100 mV. Maintaining such a low glitch amplitude at the amplifier output makes sure that the amplifier remains in the linear operating region, and results in a minimum settling time. Using 公式 6, a 10-nF capacitor is selected for C_{FLT}.

$$C_{FLT} \geq 15 \times C_{SH} \tag{6}$$

Connecting a 10-nF capacitor directly to the output of the OPA625 degrades the OPA625 phase margin and results in stability and settling-time problems. To properly drive the 10-nF capacitor, use a series resistor (R_{FLT}) to isolate the capacitor, C_{FLT}, from the OPA625. R_{FLT} must be sized based upon several constraints. To determination a suitable value for R_{FLT}, consider the impact upon the THD due to the voltage divider effect from R_{FLT} reacting with the switch resistance (R_{SW}) of the ADC input circuit, as well as the impact of the output impedance upon amplifier stability. In this example, 4.7-Ω resistors are selected. In this design example, 图 16 can be used to estimate a suitable value for R_{ISO}. R_{ISO} represents the total resistance in series with C_{FLT}, and in this example is equivalent to 2 × R_{FLT}.

TI Precision Designs

For step-by-step design procedure, circuit schematics, bill of materials, printed circuit board (PCB) files, simulation results, and test results, refer to TI Precision Design, TIDU014, "Power-optimized 16-bit 1MSPS Data Acquisition Block for Lowest Distortion and Noise Reference Design".

9.2.1.3 Application Curves

图 75 illustrates the performance of the circuit shown in 图 73.

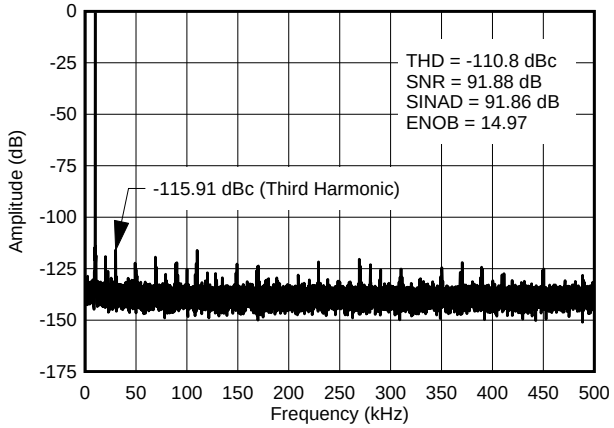

4096-point FFT at 1 MSPS, f_{IN} = 10 kHz , V_{IN} = 1.5 V_{RMS}

图 75. ADC Output FFT for 图 73

9.2.2 Single-Supply, 16-Bit, 1-MSPS, Multiplexed, SAR ADC Driver

In order to operate a high-resolution, 16-bit ADC at its maximum throughput, the full-scale voltage step must settle to better than 16-bit accuracy at the ADC inputs within the minimum specified acquisition time (t_{ACQ}). This settling imposes very stringent requirements on the driver amplifier in terms of large-signal bandwidth, slew rate, and settling time. 图 76 illustrates a typical multiplexed ADC driver application using the OPA625.

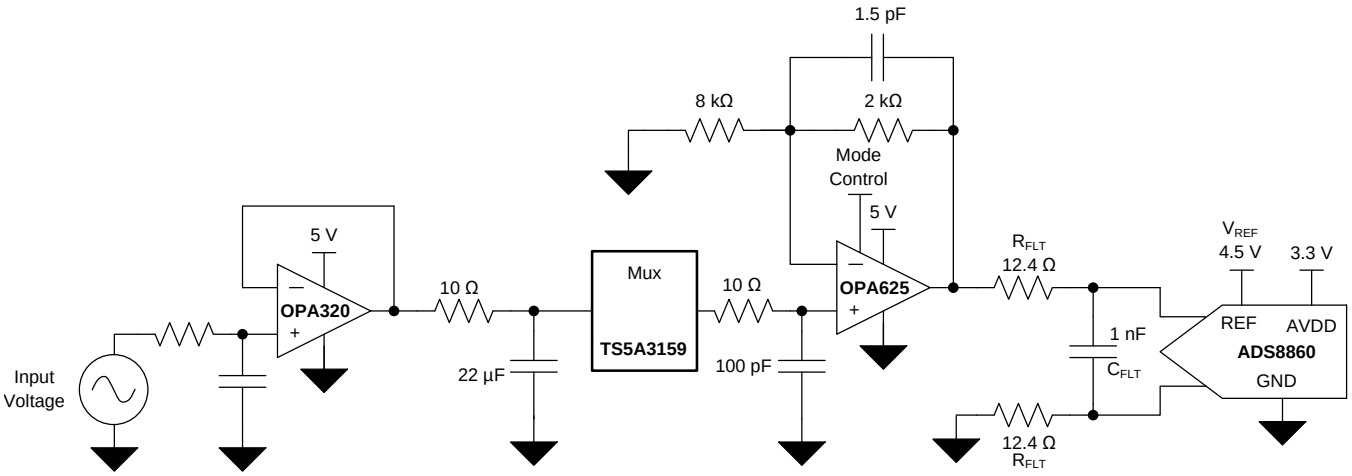

图 76. Single-Supply, 16-Bit, 1-MSPS, Multiplexed, SAR ADC Driver

9.2.2.1 Design Requirements

To optimize this circuit for performance, this design does not allow any large signal input transients at the inputs of the driver circuit for a small quiet-time period (t_{QT}) towards the end of the previous conversion. The input step voltage can appear anytime from the beginning of conversion (CONVST rising edge) until the elapse of a half cycle time ($0.5 \times t_{CYC}$). This timing constraint on the input step allows a minimum settling time of ($t_{QT} + t_{ACQ}$) for the ADC input to settle within the required accuracy, in the worst-case scenario. This provides more time for the amplifier's output to slew and settle within the required accuracy before the next conversion starts. 图 77 illustrates this timing sequence.

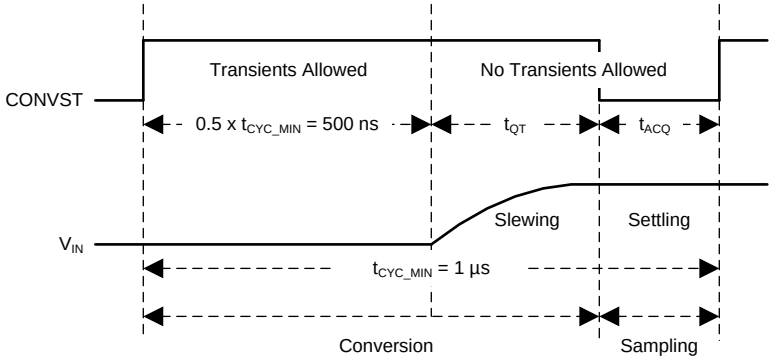

图 77. Timing Diagram for Input Signals

版权 © 2015, Texas Instruments Incorporated

9.2.2.2 Detailed Design Procedure

An ADC input driver circuit mainly consists of two parts: a driving amplifier and a fly-wheel RC filter. The amplifier is used for signal conditioning of the input voltage and its low output impedance provides a buffer between the signal source and the ADC input. The RC filter helps attenuate the sampling charge-injection from the switched-capacitor input stage of the ADC as well as acts as an anti-aliasing filter to band-limit the wideband noise contributed by the front-end circuit. The design of the ADC input driver involves optimizing the bandwidth of the circuit, driven primarily by the following requirements:

- The $R_{FLT}C_{FLT}$ filter bandwidth should be low to band-limit the noise fed into the input of the ADC thereby increasing the signal-to-noise ratio (SNR) of the system.
- The overall system bandwidth should be large enough to accommodate optimal settling of the input signal at the ADC input before the start of conversion.

C_{FLT} is chosen based upon 公式 7 . C_{FLT} is chosen to be 1 nF.

$$C_{FLT} \geq 15 \times C_{SH} \tag{7}$$

Connecting a 1-nF capacitor directly to the output of the OPA625 would degrade the OPA625 phase margin and result in stability and settling time problems. To properly drive the 1-nF capacitor, a series resistor, R_{FLT}, is used to isolate the capacitor, C_{FLT}, from the OPA625. R_{FLT} must be sized based upon several constraints. To determination a suitable value for R_{FLT}, the system designer must consider the impact upon the THD due to the voltage divider effect from R_{FLT} reacting with the switch resistance, R_{SW}, of the ADC input circuit as well as the impact of the output impedance upon amplifier stability. In this example 12.4-Ω resistors are selected. In this design example, 图 15 can be used to estimate a suitable value for R_{ISO}. R_{ISO} represents the total resistance in series with C_{FLT}, which in this example is equivalent to 2 × R_{FLT}.

TI Precision Designs

For step-by-step design procedure, circuit schematics, bill of materials, printed circuit board (PCB) files, simulation results, and test results, refer to TI Precision Design, TIDU012, "Power-optimized 16-bit 1MSPS Data Acquisition Block for Lowest Distortion and Noise Reference Design".

9.2.2.3 Application Curves

图 78 illustrates the performance of the circuit shown in 图 76.

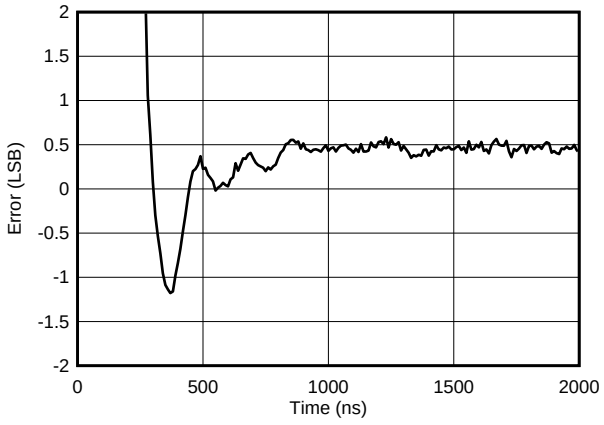

图 78. Positive Transient Response for 图 76

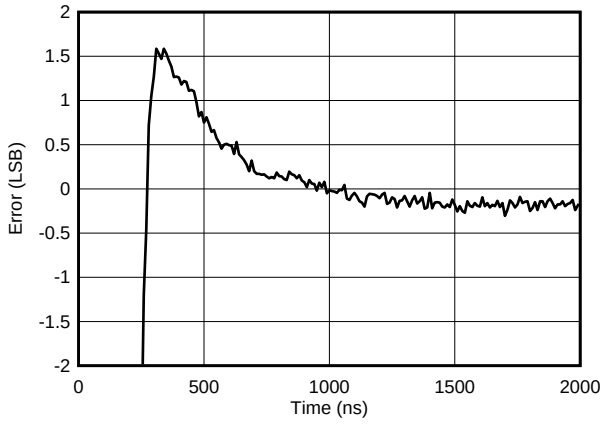

图 79. Negative Transient Response for 图 76

10 Power Supply Recommendations

The OPAx625 is specified for operation from 2.7 V to 5.5 V (±1.35 V to ±2.75 V); many specifications apply from –40°C to +125°C. Parameters that can exhibit significant variance with regard to operating voltage or temperature are presented in the Typical Characteristics. Place bypass capacitors close to the power-supply pins to reduce errors coupling in from noisy or high-impedance power supplies. For more detailed information on bypass capacitor placement, see the *Layout* section.

CAUTION

Supply voltages larger than 6 V can cause permanent damage to the device. See to the *Absolute Maximum Ratings* section.

11 Layout

11.1 Layout Guidelines

For best operational performance of the device, use good PCB layout practices, including:

- Use bypass capacitors to reduce the noise coupled from the power supply. Connect low ESR, ceramic, bypass capacitors between the power supply pins (V+ and V–) and the ground plane. Place the bypass capacitors as close to the device as possible with the 100-nF capacitor closest to the device, as indicated in 图 80. For single-supply applications, bypass capacitors on the V– pin are not required.
- Separate grounding for analog and digital portions of the circuitry is one of the simplest and most-effective methods of noise suppression. One or more layers on multilayer PCBs are usually devoted to ground planes. A ground plane helps distribute heat and reduces EMI noise pickup. Make sure to physically separate digital and analog grounds paying attention to the flow of the ground current. For more detailed information refer to SLOA089, *Circuit Board Layout Techniques*.
- In order to reduce parasitic coupling, run the input traces as far away from the supply or output traces as possible. If it is not possible to keep them separate, it is much better to cross the sensitive trace perpendicular as opposed to in parallel with the noisy trace.
- Minimize parasitic coupling between +IN and OUT for best ac performance.
- Place the external components as close to the device as possible. As shown in 图 80, keeping RF, CF, and RG close to the inverting input will minimize parasitic capacitance.
- Keep the length of input traces as short as possible. Always remember that the input traces are the most sensitive part of the circuit.
- Cleaning the PCB following board assembly is recommended for best performance.
- Any precision integrated circuit may experience performance shifts due to moisture ingress into the plastic package. Following any aqueous PCB cleaning process, bake the PCB assembly to remove moisture introduced into the device packaging during the cleaning process. A low-temperature, post-cleaning bake at 85°C for 30 minutes is sufficient for most circumstances.

版权 © 2015, Texas Instruments Incorporated

11.2 Layout Example

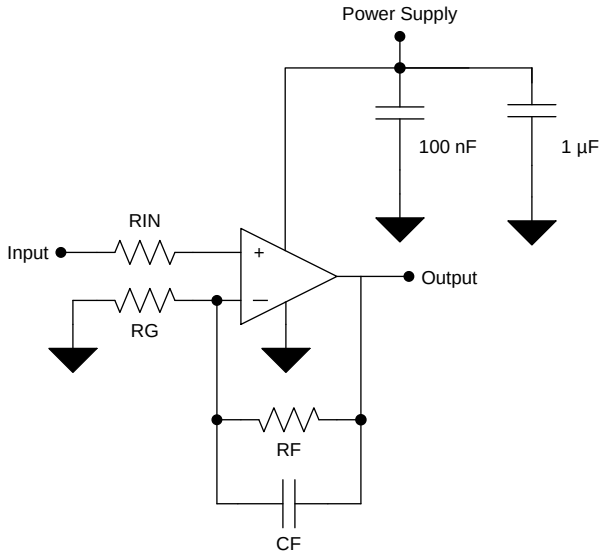

(Schematic Representation)

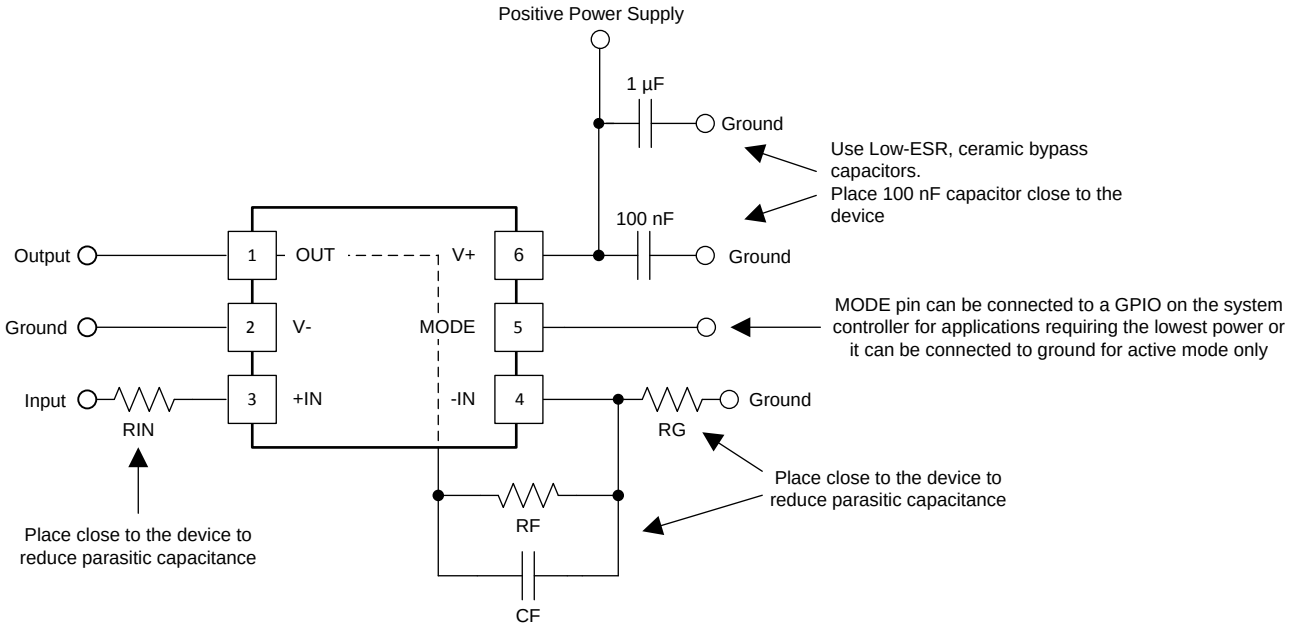

图 80. PCB Layout Example

12 器件和文档支持

12.1 器件支持

12.1.1 开发支持

12.1.1.1 TINA-TI™（免费软件下载）

TINA™是一款简单、功能强大且易于使用的电路仿真程序，此程序基于 SPICE 引擎。TINA-TI 是 TINA 软件的一款免费全功能版本，除了一系列无源和有源模型外，此版本软件还预先载入了一个宏模型库。TINA-TI 提供所有传统的 SPICE 直流、瞬态和频域分析，以及其他设计功能。

TINA-TI 可从 Analog eLab Design Center（模拟电子实验室设计中心）免费下载，它提供全面的后续处理能力，使得用户能够以多种方式形成结果。虚拟仪器提供选择输入波形和探测电路节点、电压和波形的功能，从而创建一个动态的快速入门工具。

12.1.1.2 TI 高精度设计

欲获取 TI 高精度设计，请访问 http://www.ti.com.cn/ww/analog/precision-designs/。TI 高精度设计是由 TI 公司高精度模拟 应用 专家创建的模拟解决方案，提供了许多实用电路的工作原理、组件选择、仿真、完整印刷电路板 (PCB) 电路原理图和布局布线、物料清单以及性能测量结果。

12.2 文档支持

12.2.1 相关文档

《16 位、1MSPS 多路复用数据采集参考设计指南》，TIDUAD9

12.3 相关链接

表 1 列出了快速访问链接。范围包括技术文档、支持与社区资源、工具和软件，并且可以快速访问样片或购买链接。

表 1. 相关链接

器件	产品文件夹	样片与购买	技术文档	工具与软件	支持与社区
OPA625	请单击此处	请单击此处	请单击此处	请单击此处	请单击此处
OPA2625	请单击此处	请单击此处	请单击此处	请单击此处	请单击此处

12.4 Community Resources

The following links connect to TI community resources. Linked contents are provided *AS IS* by the respective contributors. They do not constitute TI specifications and do not necessarily reflect TI's views; see TI's Terms of Use.

TI E2E™ Online Community ***TI's Engineer-to-Engineer (E2E) Community.*** Created to foster collaboration among engineers. At e2e.ti.com, you can ask questions, share knowledge, explore ideas and help solve problems with fellow engineers.

Design Support ***TI's Design Support*** Quickly find helpful E2E forums along with design support tools and contact information for technical support.

版权 © 2015, Texas Instruments Incorporated

12.5 商标

E2E is a trademark of Texas Instruments.
TINA-TI is a trademark of Texas Instruments, Inc and DesignSoft, Inc.
TINA is a trademark of DesignSoft, Inc.
All other trademarks are the property of their respective owners.

12.6 静电放电警告



ESD 可能会损坏该集成电路。德州仪器 (TI) 建议通过适当的预防措施处理所有集成电路。如果不遵守正确的处理措施和安装程序，可能会损坏集成电路。

ESD 的损坏小至导致微小的性能降级，大至整个器件故障。 精密的集成电路可能更容易受到损坏，这是因为非常细微的参数更改都可能会导致器件与其发布的规格不相符。

12.7 Glossary

SLYZ022 — *TI Glossary*.

This glossary lists and explains terms, acronyms, and definitions.

13 机械、封装和可订购信息

以下页中包括机械、封装和可订购信息。这些信息是针对指定器件可提供的最新数据。这些数据会在无通知且不对本文档进行修订的情况下发生改变。欲获得该数据表的浏览器版本，请查阅左侧的导航栏。

重要声明

德州仪器(TI) 及其下属子公司有权根据 JESD46 最新标准, 对所提供的产品和服务进行更正、修改、增强、改进或其它更改， 并有权根据 JESD48 最新标准中止提供任何产品和服务。客户在下订单前应获取最新的相关信息, 并验证这些信息是否完整且是最新的。所有产品的销售都遵循在订单确认时所提供的TI 销售条款与条件。

TI 保证其所销售的组件的性能符合产品销售时 TI 半导体产品销售条件与条款的适用规范。仅在 TI 保证的范围内，且 TI 认为 有必要时才会使用测试或其它质量控制技术。除非适用法律做出了硬性规定，否则没有必要对每种组件的所有参数进行测试。

TI 对应用帮助或客户产品设计不承担任何义务。客户应对其使用 TI 组件的产品和应用自行负责。为尽量减小与客户产品和应 用相关的风险，客户应提供充分的设计与操作安全措施。

TI 不对任何 TI 专利权、版权、屏蔽作品权或其它与使用了 TI 组件或服务的组合设备、机器或流程相关的 TI 知识产权中授予 的直接或隐含权限作出任何保证或解释。TI 所发布的与第三方产品或服务有关的信息，不能构成从 TI 获得使用这些产品或服 务的许可、授权、或认可。使用此类信息可能需要获得第三方的专利权或其它知识产权方面的许可，或是 TI 的专利权或其它 知识产权方面的许可。

对于 TI 的产品手册或数据表中 TI 信息的重要部分，仅在没有对内容进行任何篡改且带有相关授权、条件、限制和声明的情况 下才允许进行复制。TI 对此类篡改过的文件不承担任何责任或义务。复制第三方的信息可能需要服从额外的限制条件。

在转售 TI 组件或服务时，如果对该组件或服务参数的陈述与 TI 标明的参数相比存在差异或虚假成分，则会失去相关 TI 组件 或服务的所有明示或暗示授权，且这是不正当的、欺诈性商业行为。TI 对任何此类虚假陈述均不承担任何责任或义务。

客户认可并同意，尽管任何应用相关信息或支持仍可能由 TI 提供，但他们将独力负责满足与其产品及在其应用中使用 TI 产品 相关的所有法律、法规和安全相关要求。客户声明并同意，他们具备制定与实施安全措施所需的全部专业技术和知识，可预见 故障的危险后果、监测故障及其后果、降低有可能造成人身伤害的故障的发生机率并采取适当的补救措施。客户将全额赔偿因 在此类安全关键应用中使用任何 TI 组件而对 TI 及其代理造成的任何损失。

在某些场合中，为了推进安全相关应用有可能对 TI 组件进行特别的促销。TI 的目标是利用此类组件帮助客户设计和创立其特 有的可满足适用的功能安全性标准和要求的终端产品解决方案。尽管如此，此类组件仍然服从这些条款。

TI 组件未获得用于 FDA Class III（或类似的生命攸关医疗设备）的授权许可，除非各方授权官员已经达成了专门管控此类使 用的特别协议。

只有那些 TI 特别注明属于军用等级或"增强型塑料"的 TI 组件才是设计或专门用于军事/航空应用或环境的。购买者认可并同 意，对并非指定面向军事或航空航天用途的 TI 组件进行军事或航空航天方面的应用，其风险由客户单独承担，并且由客户独 力负责满足与此类使用相关的所有法律和法规要求。

TI 已明确指定符合 ISO/TS16949 要求的产品，这些产品主要用于汽车。在任何情况下，因使用非指定产品而无法达到 ISO/TS16949 要求，TI不承担任何责任。

	产品		应用
数字音频	www.ti.com.cn/audio	通信与电信	www.ti.com.cn/telecom
放大器和线性器件	www.ti.com.cn/amplifiers	计算机及周边	www.ti.com.cn/computer
数据转换器	www.ti.com.cn/dataconverters	消费电子	www.ti.com/consumer-apps
DLP® 产品	www.dlp.com	能源	www.ti.com/energy
DSP - 数字信号处理器	www.ti.com.cn/dsp	工业应用	www.ti.com.cn/industrial
时钟和计时器	www.ti.com.cn/clockandtimers	医疗电子	www.ti.com.cn/medical
接口	www.ti.com.cn/interface	安防应用	www.ti.com.cn/security
逻辑	www.ti.com.cn/logic	汽车电子	www.ti.com.cn/automotive
电源管理	www.ti.com.cn/power	视频和影像	www.ti.com.cn/video
微控制器 (MCU)	www.ti.com.cn/microcontrollers		
RFID 系统	www.ti.com.cn/rfidsys		
OMAP应用处理器	www.ti.com/omap		
无线连通性	www.ti.com.cn/wirelessconnectivity	德州仪器在线技术支持社区	www.deyisupport.com

邮寄地址： 上海市浦东新区世纪大道1568 号，中建大厦32 楼邮政编码： 200122
Copyright © 2016, 德州仪器半导体技术（上海）有限公司

PACKAGING INFORMATION

Orderable Device	Status (1)	Package Type	Package Drawing	Pins	Package Qty	Eco Plan (2)	Lead/Ball Finish (6)	MSL Peak Temp (3)	Op Temp (°C)	Device Marking (4/5)	Samples
OPA2625IDGSR	ACTIVE	VSSOP	DGS	10	2500	Green (RoHS & no Sb/Br)	CU NIPDAUAG	Level-2-260C-1 YEAR	-40 to 125	2625	Samples
OPA2625IDGST	ACTIVE	VSSOP	DGS	10	250	Green (RoHS & no Sb/Br)	CU NIPDAUAG	Level-2-260C-1 YEAR	-40 to 125	2625	Samples
OPA625IDBVR	ACTIVE	SOT-23	DBV	6	3000	Green (RoHS & no Sb/Br)	CU NIPDAU	Level-1-260C-UNLIM	-40 to 125	O625	Samples
OPA625IDBVT	ACTIVE	SOT-23	DBV	6	250	Green (RoHS & no Sb/Br)	CU NIPDAU	Level-1-260C-UNLIM	-40 to 125	O625	Samples

(1) The marketing status values are defined as follows:
ACTIVE: Product device recommended for new designs.
LIFEBUY: TI has announced that the device will be discontinued, and a lifetime-buy period is in effect.
NRND: Not recommended for new designs. Device is in production to support existing customers, but TI does not recommend using this part in a new design.
PREVIEW: Device has been announced but is not in production. Samples may or may not be available.
OBSOLETE: TI has discontinued the production of the device.

(2) Eco Plan - The planned eco-friendly classification: Pb-Free (RoHS), Pb-Free (RoHS Exempt), or Green (RoHS & no Sb/Br) - please check http://www.ti.com/productcontent for the latest availability information and additional product content details.
TBD: The Pb-Free/Green conversion plan has not been defined.
Pb-Free (RoHS): TI's terms "Lead-Free" or "Pb-Free" mean semiconductor products that are compatible with the current RoHS requirements for all 6 substances, including the requirement that lead not exceed 0.1% by weight in homogeneous materials. Where designed to be soldered at high temperatures, TI Pb-Free products are suitable for use in specified lead-free processes.
Pb-Free (RoHS Exempt): This component has a RoHS exemption for either 1) lead-based flip-chip solder bumps used between the die and package, or 2) lead-based die adhesive used between the die and leadframe. The component is otherwise considered Pb-Free (RoHS compatible) as defined above.
Green (RoHS & no Sb/Br): TI defines "Green" to mean Pb-Free (RoHS compatible), and free of Bromine (Br) and Antimony (Sb) based flame retardants (Br or Sb do not exceed 0.1% by weight in homogeneous material)

(3) MSL, Peak Temp. - The Moisture Sensitivity Level rating according to the JEDEC industry standard classifications, and peak solder temperature.

(4) There may be additional marking, which relates to the logo, the lot trace code information, or the environmental category on the device.

(5) Multiple Device Markings will be inside parentheses. Only one Device Marking contained in parentheses and separated by a "~" will appear on a device. If a line is indented then it is a continuation of the previous line and the two combined represent the entire Device Marking for that device.

(6) Lead/Ball Finish - Orderable Devices may have multiple material finish options. Finish options are separated by a vertical ruled line. Lead/Ball Finish values may wrap to two lines if the finish value exceeds the maximum column width.

Important Information and Disclaimer: The information provided on this page represents TI's knowledge and belief as of the date that it is provided. TI bases its knowledge and belief on information provided by third parties, and makes no representation or warranty as to the accuracy of such information. Efforts are underway to better integrate information from third parties. TI has taken and continues to take reasonable steps to provide representative and accurate information but may not have conducted destructive testing or chemical analysis on incoming materials and chemicals. TI and TI suppliers consider certain information to be proprietary, and thus CAS numbers and other limited information may not be available for release.

In no event shall TI's liability arising out of such information exceed the total purchase price of the TI part(s) at issue in this document sold by TI to Customer on an annual basis.

TAPE AND REEL INFORMATION

REEL DIMENSIONS

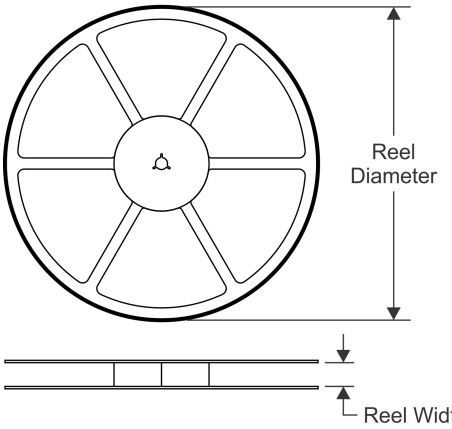

TAPE DIMENSIONS

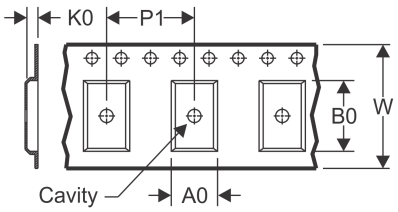

A0	Dimension designed to accommodate the component width
B0	Dimension designed to accommodate the component length
K0	Dimension designed to accommodate the component thickness
W	Overall width of the carrier tape
P1	Pitch between successive cavity centers

QUADRANT ASSIGNMENTS FOR PIN 1 ORIENTATION IN TAPE

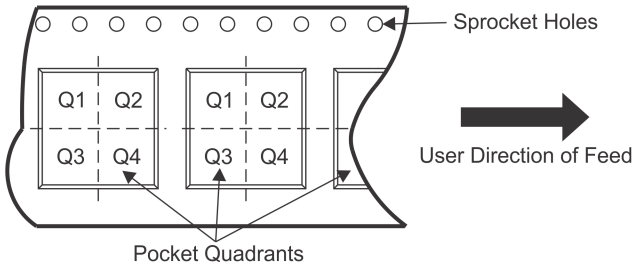

*All dimensions are nominal

Device	Package Type	Package Drawing	Pins	SPQ	Reel Diameter (mm)	Reel Width W1 (mm)	A0 (mm)	B0 (mm)	K0 (mm)	P1 (mm)	W (mm)	Pin1 Quadrant
OPA2625IDGSR	VSSOP	DGS	10	2500	330.0	12.4	5.3	3.4	1.4	8.0	12.0	Q1
OPA2625IDGST	VSSOP	DGS	10	250	330.0	12.4	5.3	3.4	1.4	8.0	12.0	Q1
OPA625IDBVR	SOT-23	DBV	6	3000	178.0	9.0	3.23	3.17	1.37	4.0	8.0	Q3
OPA625IDBVT	SOT-23	DBV	6	250	178.0	9.0	3.23	3.17	1.37	4.0	8.0	Q3

TAPE AND REEL BOX DIMENSIONS

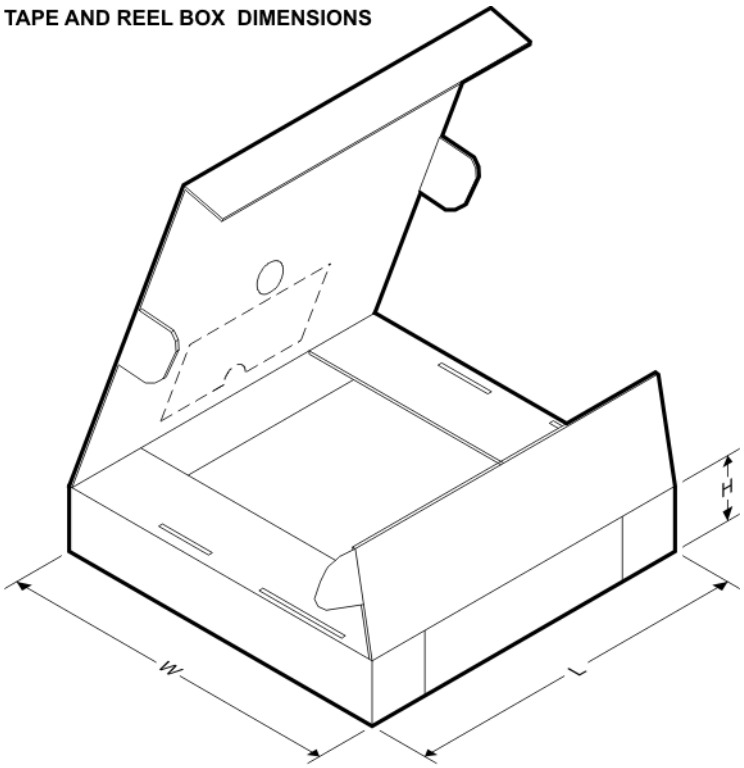

*All dimensions are nominal

Device	Package Type	Package Drawing	Pins	SPQ	Length (mm)	Width (mm)	Height (mm)
OPA2625IDGSR	VSSOP	DGS	10	2500	366.0	364.0	50.0
OPA2625IDGST	VSSOP	DGS	10	250	366.0	364.0	50.0
OPA625IDBVR	SOT-23	DBV	6	3000	180.0	180.0	18.0
OPA625IDBVT	SOT-23	DBV	6	250	180.0	180.0	18.0

PACKAGE OUTLINE

DBV0006A

SOT-23 - 1.45 mm max height

SMALL OUTLINE TRANSISTOR

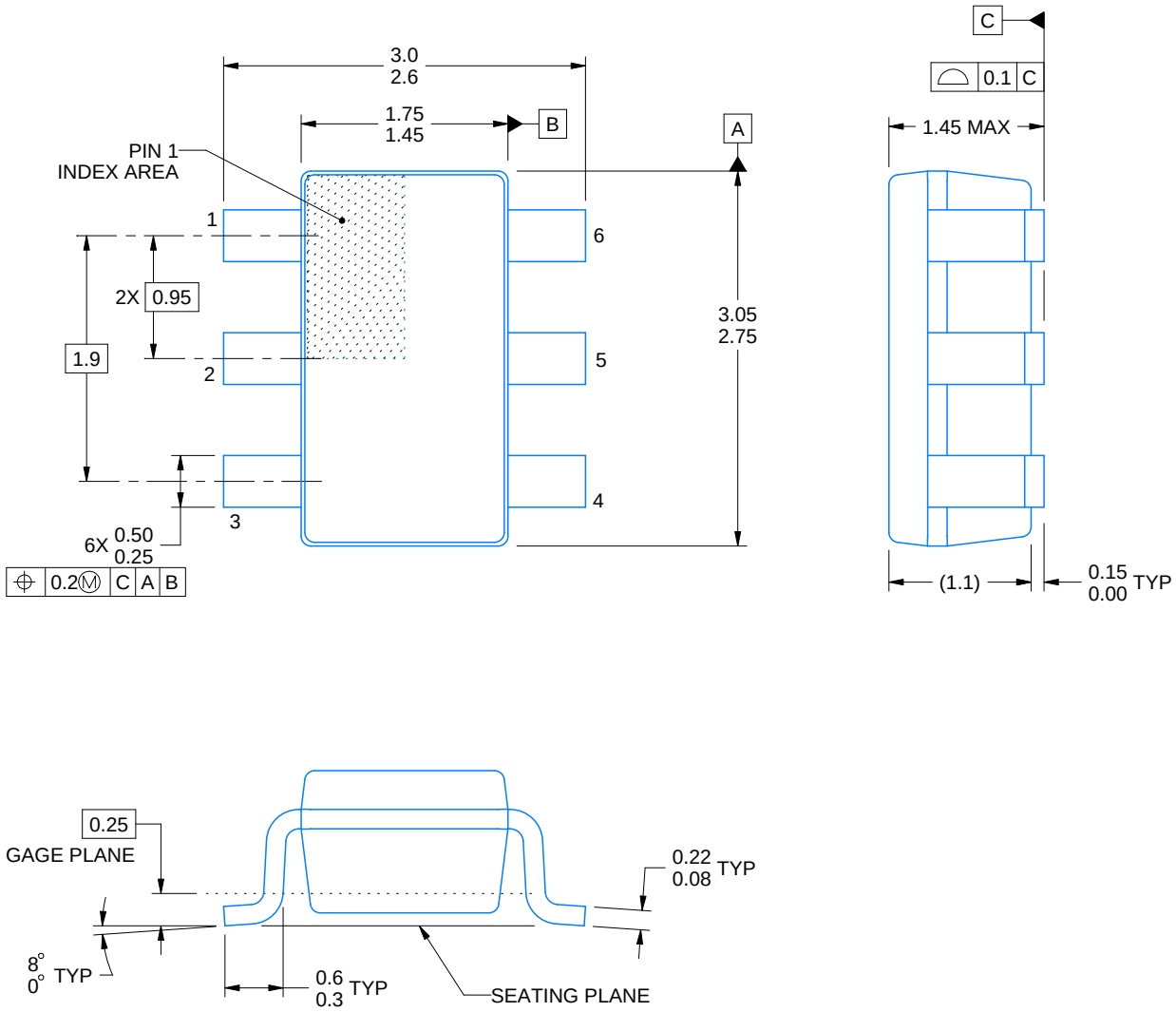

4214840/B 03/2018

NOTES:

1. All linear dimensions are in millimeters. Any dimensions in parenthesis are for reference only. Dimensioning and tolerancing per ASME Y14.5M.
2. This drawing is subject to change without notice.
3. Body dimensions do not include mold flash or protrusion. Mold flash and protrusion shall not exceed 0.15 per side.
4. Leads 1,2,3 may be wider than leads 4,5,6 for package orientation.
5. Refernce JEDEC MO-178.

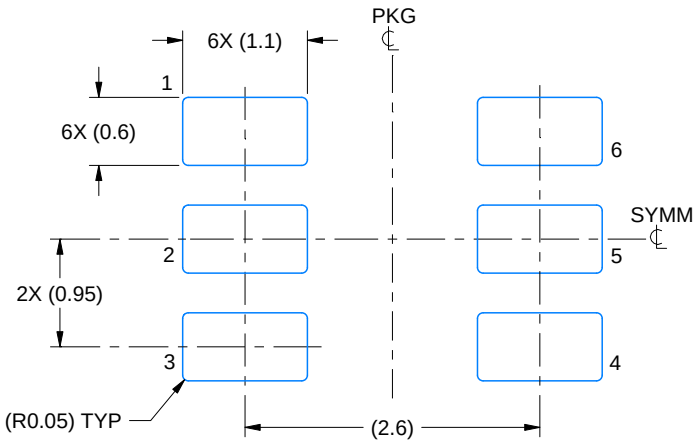

LAND PATTERN EXAMPLE
EXPOSED METAL SHOWN
SCALE:15X

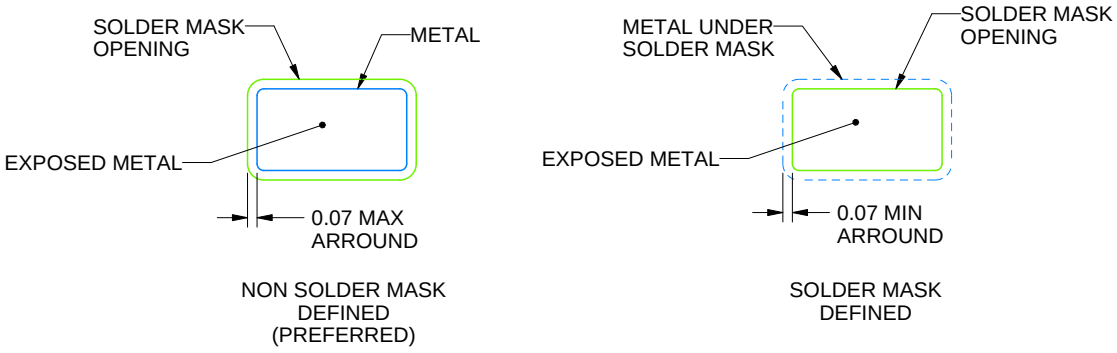

SOLDER MASK DETAILS

4214840/B 03/2018

NOTES: (continued)

6. Publication IPC-7351 may have alternate designs.
7. Solder mask tolerances between and around signal pads can vary based on board fabrication site.

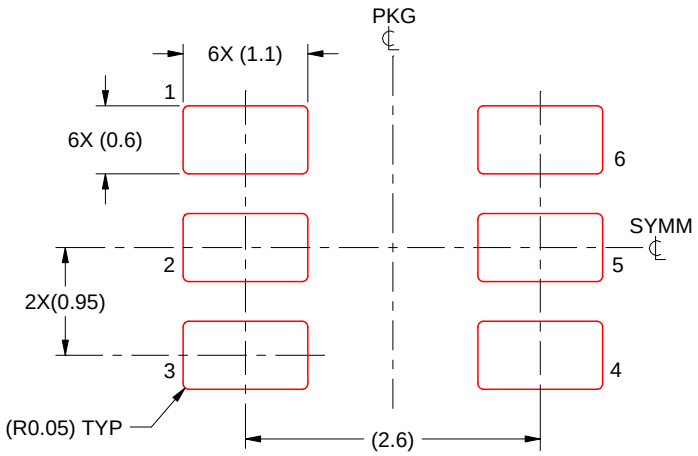

SOLDER PASTE EXAMPLE
BASED ON 0.125 mm THICK STENCIL
SCALE:15X

4214840/B 03/2018

NOTES: (continued)

8. Laser cutting apertures with trapezoidal walls and rounded corners may offer better paste release. IPC-7525 may have alternate design recommendations.
9. Board assembly site may have different recommendations for stencil design.

PACKAGE OUTLINE

DGS0010A

VSSOP - 1.1 mm max height

SMALL OUTLINE PACKAGE

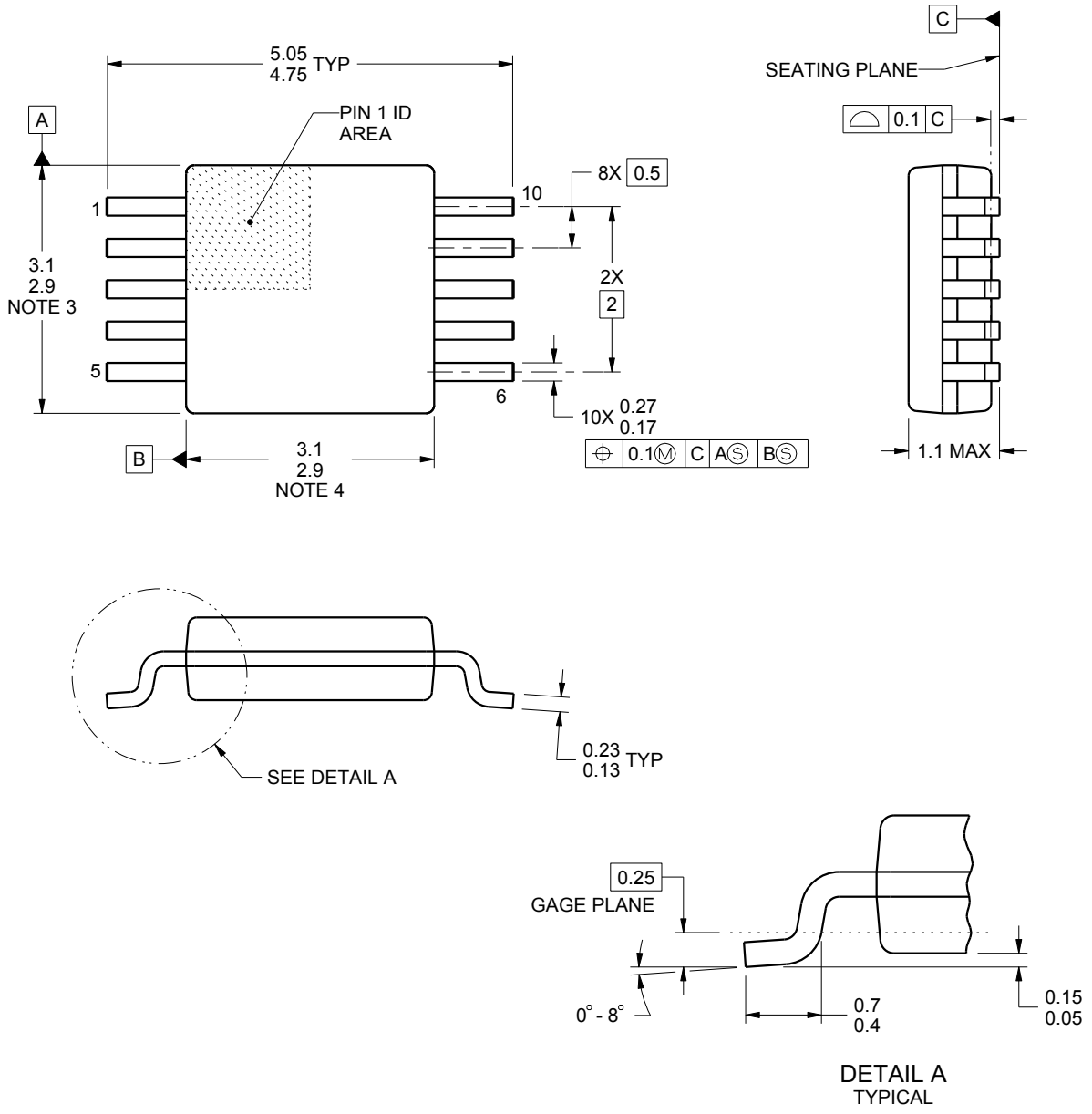

NOTES:

1. All linear dimensions are in millimeters. Any dimensions in parenthesis are for reference only. Dimensioning and tolerancing per ASME Y14.5M.
2. This drawing is subject to change without notice.
3. This dimension does not include mold flash, protrusions, or gate burrs. Mold flash, protrusions, or gate burrs shall not exceed 0.15 mm per side.
4. This dimension does not include interlead flash. Interlead flash shall not exceed 0.25 mm per side.
5. Reference JEDEC registration MO-187, variation BA.

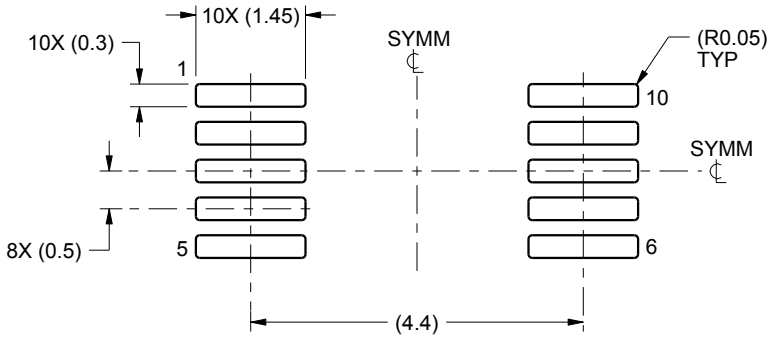

LAND PATTERN EXAMPLE
SCALE:10X

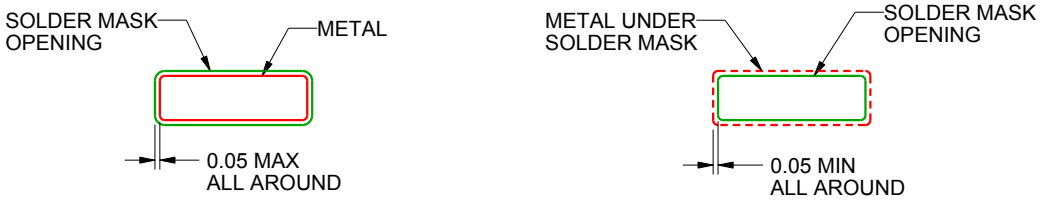

SOLDER MASK DETAILS
NOT TO SCALE

4221984/A 05/2015

NOTES: (continued)

6. Publication IPC-7351 may have alternate designs.
7. Solder mask tolerances between and around signal pads can vary based on board fabrication site.

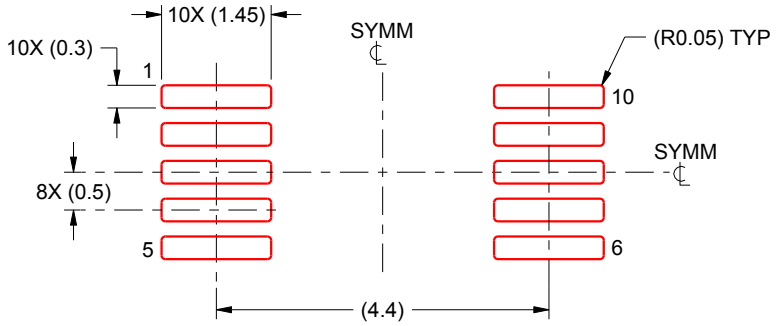

SOLDER PASTE EXAMPLE
BASED ON 0.125 mm THICK STENCIL
SCALE:10X

4221984/A 05/2015

NOTES: (continued)

8. Laser cutting apertures with trapezoidal walls and rounded corners may offer better paste release. IPC-7525 may have alternate design recommendations.
9. Board assembly site may have different recommendations for stencil design.

重要声明和免责声明

TI 均以“原样”提供技术性及可靠性数据（包括数据表）、设计资源（包括参考设计）、应用或其他设计建议、网络工具、安全信息和其他资源，不保证其中不含任何瑕疵，且不做任何明示或暗示的担保，包括但不限于对适销性、适合某特定用途或不侵犯任何第三方知识产权的暗示担保。

所述资源可供专业开发人员应用TI 产品进行设计使用。您将对以下行为独自承担全部责任：(1) 针对您的应用选择合适的TI 产品；(2) 设计、验证并测试您的应用；(3) 确保您的应用满足相应标准以及任何其他安全、安保或其他要求。所述资源如有变更，恕不另行通知。TI 对您使用所述资源的授权仅限于开发资源所涉及TI 产品的相关应用。除此之外不得复制或展示所述资源，也不提供其它TI或任何第三方的知识产权授权许可。如因使用所述资源而产生任何索赔、赔偿、成本、损失及债务等，TI对此概不负责，并且您须赔偿由此对TI 及其代表造成的损害。

TI 所提供产品均受TI 的销售条款 (http://www.ti.com.cn/zh-cn/legal/termsofsale.html) 以及ti.com.cn上或随附TI产品提供的其他可适用条款的约束。TI提供所述资源并不扩展或以其他方式更改TI 针对TI 产品所发布的可适用的担保范围或担保免责声明。

邮寄地址：上海市浦东新区世纪大道 1568 号中建大厦 32 楼，邮政编码：200122
Copyright © 2019 德州仪器半导体技术（上海）有限公司