OPA838 1mA、300MHz 增益带宽、电压反馈运算放大器

1 特性

- 增益带宽积：300MHz
- 极低（修整后）的电源电流：950μA
- 带宽：90MHz (A_V = 6V/V)
- 较高的全功率带宽：45MHz，$4V_{PP}$
- 负轨输入，轨至轨输出
- 单电源工作电压范围：2.7V 至 5.4V
- 25°C 下的输入失调电压：±125μV（最大值）
- 输入失调电压漂移：< ±1.6μV/°C（最大值）
- 输入电压噪声：1.8nV/√Hz (> 200Hz)
- 输入电流噪声：1pA/√Hz (> 2000Hz)
- 关断电流小于 1μA，可节省电能 中的“关断电流小于 5μA”更改成了“关断电流小于 1μA”

2 应用

- 低功耗跨阻放大器
- 低噪声高增益级
- 12 位至 16 位低功耗 SAR ADC 驱动器
- 高增益有源滤波器设计
- 超声波流量计

3 说明

OPA838 解补偿电压反馈运算放大器只需 0.95mA 的修整电源电流，即可以 1.8nV/√Hz 的输入噪声电压提供高达 300MHz 的增益带宽积。这些 特性 相结合，可为光电二极管跨阻设计和高电压增益级（它们在信号接收器 应用中需要最低的输入电压噪声）提供极其省电的解决方案。

以 6V/V 的最小建议同相增益运行时会产生 90MHz、–3dB 带宽。极低的输入噪声和失调电压使得 OPA838 特别适合高增益。即使在 1000V/V 的直流耦合增益下，也可获得 300kHz 的信号带宽，且最大输出失调电压为 ±125mV。

单通道 OPA838 采用 6 引脚 SOT-23 和 SC70 封装（包含电源关断特性）以及 5 引脚 SC70 封装。

器件信息(1)

器件型号	封装	封装尺寸（标称值）
OPA838	SOT-23 (6)	2.90mm × 1.60mm
	SC70 (5)	2.00mm × 1.25mm
	SC70 (6)	2.00mm × 1.25mm

(1) 如需了解所有可用封装，请参阅产品说明书末尾的封装选项附录。

3V 单电源，小于 3mW 的光电二极管放大器，具有小于 1.1pA/√Hz 的总输入参考电流噪声，并具有总体 SSBW 为 1MHz 的 100kΩ 增益

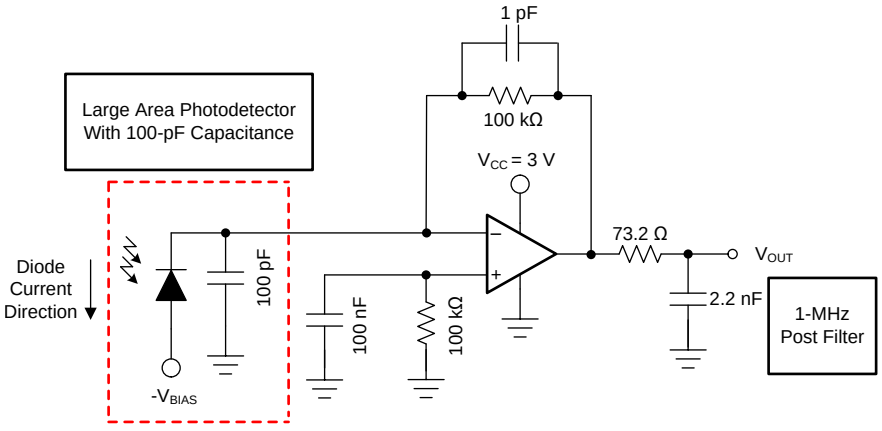

本文档旨在为方便起见，提供有关 TI 产品中文版本的信息，以确认产品的概要。 有关适用的官方英文版本的最新信息，请访问 www.ti.com，其内容始终优先。 TI 不保证翻译的准确性和有效性。 在实际设计之前，请务必参考最新版本的英文版本。

目录

1 特性 ... 1
2 应用 ... 1
3 说明 ... 1
4 修订历史记录 ... 2
5 Device Comparison Table ... 4
6 Pin Configuration and Functions ... 4
7 Specifications ... 5
7.1 Absolute Maximum Ratings ... 5
7.2 ESD Ratings ... 5
7.3 Recommended Operating Conditions ... 5
7.4 Thermal Information ... 5
7.5 Electrical Characteristics: V_S = 5 V ... 6
7.6 Electrical Characteristics: V_S = 3 V ... 8
7.7 Typical Characteristics: V_S = 5 V ... 10
7.8 Typical Characteristics: V_S = 3 V ... 13
7.9 Typical Characteristics: Over Supply Range ... 16
8 Detailed Description ... 20
8.1 Overview ... 20
8.2 Functional Block Diagram ... 20
8.3 Feature Description ... 20
8.4 Device Functional Modes ... 24
8.5 Power Shutdown Operation ... 27
9 Application and Implementation ... 28
9.1 Application Information ... 28
10 Power Supply Recommendations ... 36
11 Layout ... 37
11.1 Layout Guidelines ... 37
11.2 Layout Example ... 37
12 器件和文档支持 ... 38
12.1 器件支持 ... 38
12.2 文档支持 ... 38
12.3 商标 ... 39
12.4 静电放电警告 ... 39
12.5 术语表 ... 39
13 机械、封装和可订购信息 ... 39

4 修订历史记录

注：之前版本的页码可能与当前版本有所不同。

Changes from Revision A (February 2018) to Revision B — **Page**

- 已更改 将特性部分 ... 1
- Changed value of common-mode and differential-mode input impedance in Electrical Characterictics: V_S = 5 V and Electrical Characterictics: V_S = 3 V tables ... 7
- Changed value of power-down quiescent current in Electrical Characteristics: V_S = 5 V and Electrical Characteristics: V_S = 3 V tables ... 7
- 已更改 *5 µA* to *1 µA* in *Overview* section ... 20
- 已更改 standby current from *5 µA* to *1 µA* in *Power-Down Operation* section ... 21
- 已更改 common-mode input capacitance from *1.3 pF* to *1 pF* in *Trade-Offs in Selecting The Feedback Resistor Value* section ... 21
- 已更改 *1 + 6.3 / 1.2 = 6.25 V/V, adding the 1.3-pF device common-mode capacitance* to *1 + 6 / 1.2 = 6 V/V, adding the 1-pF device common-mode capacitance* in *Trade-Offs in Selecting The Feedback Resistor Value* section ... 22
- 已更改 *2 µA* to *0.1 µA* and *5 µA* to *1 µA* in last sentence of *Power Shutdown Operation* section ... 27
- 已更改 *Power Supply Recommendations and Thermal Notes* title to *Power Supply Recommendations* ... 36

Changes from Original (August 2017) to Revision A — **Page**

- Added OPA837 to the *Device Comparison* table ... 4
- Changed *Device Comparison* table note ... 4
- Changed format of pin names in pinout drawings in *Pin Configuration and Functions* section ... 4
- Added DCK to pinout description in 6-pin SOT-23 and SC70 pinout drawing ... 4
- Changed I/O column header to "TYPE" in *Pin Configuration and Functions* section ... 4
- Added table note to table to define pin types in *Pin Configuration and Functions* section ... 4
- Added table note to *Absolute Maximum Ratings* table ... 5
- Changed bandwidth for 0.1-dB flatness test condition from V_{OUT} = 2 V_{PP} and G = 10 to V_{OUT} = 200 mV_{PP} and G = 6 in the Electrical Characteristics: V_S = 5 V table ... 6
- Added values for V_{OH} and V_{OL} parameters at T_A = -40 to +125°C in Electrical Characteristics: V_S = 5 V table ... 7

版权 © 2017–2018, Texas Instruments Incorporated

- Changed typical bandwidth for 0.1-dB flatness from 5 MHz to 9 MHz in Electrical Characteristics: V_S = 3 V table 8
- Changed bandwidth for 0.1-dB flatness test conditions from V_{OUT} = 2 V_{PP} and G = 10 to V_{OUT} = 200 mV_{PP} and G = 6 in Electrical Characteristics: V_S = 3 V table 8
- Added values for V_{OH} and V_{OL} parameters at T_A = -40 to +125°C in Electrical Characteristics: V_S = 3 V table 9
- Changed V_O test condition from 20 mV to 200 mV in 图 5 10
- Changed V_O test condition from 20 mV to 200 mV in 图 6 10
- 已更改 test conditions from V_{OUT} = 2 V_{PP}, R_F = 0 Ω, G = 1 V/V to R_F = 1 kΩ, R_G = 200 Ω, R_L = 2 kΩ, G = 6 V/V in *Typical Characteristics: V_S = 3 V* section 13
- Changed V_O test condition from 20 mV to 200 mV in 图 23 13
- Changed V_O test condition from 20 mV to 200 mV in 图 24 13
- 已添加 condition statement to Typical Characteristics: Over Supply Range 16
- 已更改 Y-axis label from "Disable and Vo (Bipolar supplies)" to "Disable and V_{OUT} (Bipolar Supplies, Volts)" in 图 51 17
- 已更改 Y-axis label from "PD and Output Voltages" to " Disable and V_{OUT} (Bipolar Supplies, Volts)" in 图 52..... 17
- Deleted 5-V supply and changed the Y-axis label of 图 57 18
- 已更改 specification load value from 1-kΩ to 2-kΩ in *Output Voltage Range* section..... 21
- 已更改 first paragraph to correct power down logic in *Power-Down Operation* section..... 21
- 已更改 image references in *Power-Down Operation* section 21
- 已更改 V1 value from 2.5 Ω to 2.5 V in 图 64..... 22
- 已更改 V2 value from 2.5 Ω to –2.5 V in 图 64..... 22
- Changed V1 value from 2.5 Ω to 2.5 V, changed V2 value from 2.5 Ω to –2.5 V, and changed R_{OUT} to R_{LOAD} in 图 66 23
- 已更改 V_{OUT} input signal from ±.035 V_{OUT} to ±0.35 V_{IN} in 图 68..... 24
- Changed V1 value from 4.5 Ω to 4.5 V in 图 70..... 25
- 已更改 V_{EE} to ground in 图 70 25
- Changed V1 value from 3 Ω to 3 V in 图 72..... 26
- Updated *Single-Supply Op Amp Design Techniques* application report link in *Device Functional Modes* section 27
- 已更改 "Cs" and "Cf" to "C_S" and "C_F" in *Application Information* section..... 33
- Updated *Transimpedance Considerations for High-Speed Amplifiers* application report link in *Detailed Design Procedure* section..... 35
- 已更改 EVM guide link in *Layout Guidelines* section..... 37

Copyright © 2017–2018, Texas Instruments Incorporated

5 Device Comparison Table(1)

PART NUMBER	GBP (MHz)	5-V I_Q (mA, MAXIMUM 25°C)	INPUT NOISE VOLTAGE (nV/√Hz)	2-V_{PP} THD (dBc, 100 kHz)	RAIL-TO-RAIL INPUT/OUTPUT	DUALS
OPA838	300	0.99	1.9	–110	Negative in/out	None
OPA837	50	0.625	4.7	–120	Negative in/out	OPA2837
OPA835	30	0.35	9.3	–100	Negative in/out	OPA2835
OPA836	110	1	4.8	–115	Negative in/out	OPA2836
LMP7717	88	1.4	5.8	—	Negative in/out	LMP7718
OPA830	100	4.7	9.5	–105	Negative in/out	OPA2830
THS4281	38	0.93	12.5	12.5	In/out	None

(1) For a complete selection of TI high-speed amplifiers, visit www.ti.com

6 Pin Configuration and Functions

DBV and DCK Package
6-Pin SOT-23 and SC70
Top View

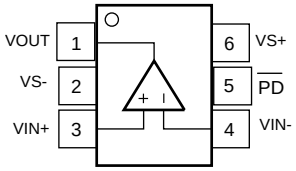

DCK Package
5-Pin SC70
Top View

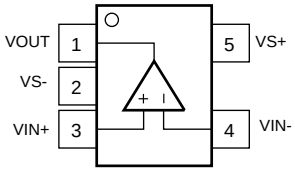

Pin Functions

PIN			TYPE(1)	DESCRIPTION
NAME	SOT-23 and SC70	SC70		
$\overline{PD}$	5	—	I/O	Amplifier power down. Low = disabled, high = normal operation (pin must be driven).
VIN–	4	4	I/O	Inverting input pin
VIN+	3	3	I/O	Noninverting input pin
VOUT	1	1	I/O	Output pin
VS–	2	2	P	Negative power-supply pin
VS+	6	5	P	Positive power-supply input

(1) I = input, O = output, and P = power.

Copyright © 2017–2018, Texas Instruments Incorporated

7 Specifications

7.1 Absolute Maximum Ratings

over operating free-air temperature range (unless otherwise noted)(1)

		MIN	MAX	UNIT
$V_{S–}$ to V_{S+}	Supply voltage		5.5	V
	Supply turnon, off maximum dV/dT(2)		1	V/µs
V_I	Input voltage	$V_{S–}$ – 0.5	V_{S+} + 0.5	V
V_{ID}	Differential input voltage		±1	V
I_I	Continuous input current		±10	mA
I_O	Continuous output current(3)		±20	mA
	Continuous power dissipation	See *Thermal Information*		
T_J	Maximum junction temperature		150	°C
T_A	Operating free-air temperature	–40	125	°C
T_{stg}	Storage temperature	–65	150	°C

(1) Stresses beyond those listed under *Absolute Maximum Ratings* may cause permanent damage to the device. These are stress ratings only, which do not imply functional operation of the device at these or any other conditions beyond those indicated under *Recommended Operating Conditions*. Exposure to absolute-maximum-rated conditions for extended periods may affect device reliability.
(2) Staying below this ± supply turn-on edge rate prevents the edge-triggered ESD absorption device across the supply pins from turning on.
(3) Long-term continuous output current for electromigration limits.

7.2 ESD Ratings

			VALUE	UNIT
$V_{(ESD)}$	Electrostatic discharge	Human body model (HBM), per ANSI/ESDA/JEDEC JS-001(1)	±1500	V
		Charged-device model (CDM), per JEDEC specification JESD22-C101(2)	±1000	

(1) JEDEC document JEP155 states that 500-V HBM allows safe manufacturing with a standard ESD control process.
(2) JEDEC document JEP157 states that 250-V CDM allows safe manufacturing with a standard ESD control process.

7.3 Recommended Operating Conditions

over operating free-air temperature range (unless otherwise noted)

		MIN	NOM	MAX	UNIT
V_{S+}	Single-supply voltage	2.7	5	5.4	V
T_A	Ambient temperature	–40	25	125	°C

7.4 Thermal Information

THERMAL METRIC(1)		OPA838			UNIT
		DBV (SOT-23)	DCK (SC70)	DCKS (SC70)	
		6 PINS	5 PINS	6 PINS	
$R_{\theta JA}$	Junction-to-ambient thermal resistance	194	203	189	°C/W
$R_{\theta JCtop}$	Junction-to-case (top) thermal resistance	129	152	150	°C/W
$R_{\theta JB}$	Junction-to-board thermal resistance	39	76	79	°C/W
ψ_{JT}	Junction-to-top characterization parameter	26	58	61	°C/W
ψ_{JB}	Junction-to-board characterization parameter	39	76	79	°C/W

(1) For more information about traditional and new thermal metrics, see the Semiconductor and IC Package Thermal Metrics application report.

Copyright © 2017–2018, Texas Instruments Incorporated

7.5 Electrical Characteristics: V_S = 5 V

at V_{S+} = 5 V, $V_{S–}$ = 0 V, R_F = 1 kΩ, R_G = 200 Ω, R_L = 2 kΩ, G = 6 V/V, input and output referenced to midsupply, and T_A ≈ 25°C, (unless otherwise noted)

PARAMETER		TEST CONDITIONS	MIN	TYP	MAX	UNIT	TEST LEVEL(1)
AC PERFORMANCE							
SSBW	Small-signal bandwidth	V_{OUT} = 20 mV_{PP}, G = 6, (peaking < 4 dB)	75	90		MHz	C
		V_{OUT} = 20 mV_{PP}, G = 10, R_F = 1.6 kΩ		50			C
		V_{OUT} = 20 mV_{PP}, G = 100, R_F = 16.9 kΩ		3			C
GBP	Gain-bandwidth product	V_{OUT} = 20 mV_{PP}, G = 100	240	300		MHz	C
LSBW	Large-signal bandwidth	V_{OUT} = 2 V_{PP}, G = 6		45		MHz	C
	Bandwidth for 0.1-dB flatness	V_{OUT} = 200 mV_{PP}, G = 6		10		MHz	C
SR	Slew rate	From LSBW(2)	250	350		V/µs	C
	Overshoot, undershoot	V_{OUT} = 2-V step, G = 6, input t_R = 12 ns		1%	2%		C
t_R, t_F	Rise, fall time	V_{OUT} = 2-V step, G = 6, R_L = 2 kΩ, input t_R = 12 ns		12.5	13	ns	C
	Settling time to 0.1%	V_{OUT} = 2-V step, G = 6, input t_R = 12 ns		30		ns	C
	Settling time to 0.01%	V_{OUT} = 2-V step, G = 6, input t_R = 12 ns		40		ns	C
HD2	Second-order harmonic distortion	f = 100 kHz, V_O = 4 V_{PP}, G = 6 (see 图 74)		–110		dBc	C
HD3	Third-order harmonic distortion	f = 100 kHz, V_O = 4 V_{PP}, G = 6 (see 图 74)		–120		dBc	C
	Input voltage noise	f > 1 kHz		1.8		nV/√Hz	C
	Voltage noise 1/f corner frequency			100		Hz	C
	Input current noise	f > 100 kHz		1		pA/√Hz	C
	Current noise 1/f corner frequency			7		kHz	C
	Overdrive recovery time	G = 6, 2x output overdrive, DC-coupled		50		ns	C
	Closed-loop output impedance	f = 1 MHz, G = 6		0.3		Ω	C
DC PERFORMANCE							
A_{OL}	Open-loop voltage gain	V_O = ±2 V, R_L = 2 kΩ	120	125		dB	A
	Input-referred offset voltage	T_A ≈ 25°C	–125	±15	125	µV	A
		T_A = 0°C to 70°C	–165	±15	200		B
		T_A = –40°C to 85°C	–230	±15	220		B
		T_A = –40°C to 125°C	–230	±15	285		B
	Input offset voltage drift(3)	T_A = –40°C to 125°C(4)	–1.6	±0.4	1.6	µV/°C	B
	Input bias current(5)	T_A ≈ 25°C	0.7	1.5	2.8	µA	A
		T_A = 0°C to 70°C	.2	1.5	3.5		B
		T_A = –40°C to 85°C	.2	1.5	3.7		B
		T_A = –40°C to 125°C	.2	1.5	4.4		B
	Input bias current drift(3)	T_A = –40°C to 125°C	4.5	7.8	17	nA/°C	B
	Input offset current	T_A ≈ 25°C	–70	±20	70	nA	A
		T_A = 0°C to 70°C	–83	±20	93		B
		T_A = –40°C to 85°C	–105	±20	100		B
		T_A = –40°C to 125°C	–105	±20	120		B
	Input offset current drift(3)	T_A = –40°C to 125°C	–500	±40	500	pA/°C	B

(1) Test levels (all values set by characterization and simulation): (A) 100% tested at 25°C, overtemperature limits by characterization and simulation; (B) Not tested in production, limits set by characterization and simulation; (C) Typical value only for information.
(2) This slew rate is the average of the rising and falling time estimated from the large-signal bandwidth as: (0.8 × V_{PEAK} / √2) × 2π × $f_{–3dB}$ where this $f_{–3dB}$ is the typical measured 4-V_{PP} bandwidth at gains of 6 V/V.
(3) Input offset voltage drift, input bias current drift, and input offset current drift are average values calculated by taking data at the end points, computing the difference, and dividing by the temperature range.
(4) Input offset voltage drift, input bias current drift, and input offset current drift typical specifications are mean ± 1σ characterized by the full temperature range end-point data. Maximum drift specifications are set by the min, max packaged test range on the wafer-level screened drift. Drift is not specified by the final automated test equipment (ATE) or by QA sample testing.
(5) Current is considered positive out of the pin.

Copyright © 2017–2018, Texas Instruments Incorporated

Electrical Characteristics: V_S = 5 V (continued)

at V_{S+} = 5 V, $V_{S–}$ = 0 V, R_F = 1 kΩ, R_G = 200 Ω, R_L = 2 kΩ, G = 6 V/V, input and output referenced to midsupply, and T_A ≈ 25°C, (unless otherwise noted)

PARAMETER		TEST CONDITIONS	MIN	TYP	MAX	UNIT	TEST LEVEL(1)
INPUT							
	Common-mode input range, low	T_A ≈ 25°C, CMRR > 92 dB		$V_{S–}$ – 0.2	$V_{S–}$ – 0	V	A
		T_A = –40°C to 125°C, CMRR > 92 dB		$V_{S–}$ – 0			B
	Common-mode input range, high	T_A ≈ 25°C, CMRR > 92 dB	V_{S+} – 1.3	V_{S+} – 1.2		V	A
		T_A = –40°C to 125°C, CMRR > 92 dB		V_{S+} – 1.3			B
CMRR	Common-mode rejection ratio		95	105		dB	A
	Input impedance common-mode			35 || 1		MΩ || pF	C
	Input impedance differential mode			30 || 1.3		kΩ || pF	C
OUTPUT							
V_{OL}	Output voltage, low	T_A ≈ 25°C, G = 6		$V_{S–}$ + 0.05	$V_{S–}$ + 0.1	V	A
		T_A = –40°C to 125°C, G = 6		$V_{S–}$ + 0.05	$V_{S–}$ + 0.1		B
V_{OH}	Output voltage, high	T_A ≈ 25°C, G = 6	V_{S+} – 0.1	V_{S+} – 0.05		V	A
		T_A = –40°C to 125°C, G = 6	V_{S+} – 0.2	V_{S+} – 0.1			B
	Maximum current into a resistive load	T_A ≈ 25°C, ±1.53 V into 41.3 Ω, V_{IO} < 2 mV	±35	±40		mA	A
	Linear current into a resistive load	T_A ≈ 25°C, ±1.81 V into 70.6 Ω, A_{OL} > 80 dB	±25	±28		mA	A
		T_A = –40°C to 125°C, ±1.58 V into 70.6 Ω, A_{OL} > 80 dB	±22	±25			B
	DC output impedance	G = 6		0.02		Ω	C
POWER SUPPLY							
	Specified operating voltage		2.7	5	5.4	V	B
	Quiescent operating current	T_A ≈ 25°C (6)	913	960	993	µA	A
		T_A = –40°C to 125°C	700	960	1330		B
dIq/dT	Quiescent current temperature coefficient	T_A = –40°C to 125°C	2.6	3	3.4	µA/°C	B
+PSRR	Positive power-supply rejection ratio		98	110		dB	A
–PSRR	Negative power-supply rejection ratio		93	105		dB	A
POWER DOWN (Pin Must be Driven, SOT23-6 and SC70-6)							
	Enable voltage threshold	Specified *on* above $V_{S–}$+ 1.5 V	1.5			V	A
	Disable voltage threshold	Specified *off* below $V_{S–}$+ 0.55 V			0.55	V	A
	Disable pin bias current	$\overline{PD}$ = $V_{S–}$ to V_{S+}	–50	20	50	nA	A
	Power-down quiescent current	$\overline{PD}$ = 0.55 V		0.1	1	µA	A
	Turnon time delay	Time from $\overline{PD}$ = high to V_{OUT} = 90% of final value		1.7		usec	C
	Turnoff time delay	Time from $\overline{PD}$ = low to V_{OUT} = 10% of original value		100		ns	C

(6) The typical specification is at 25°C T_J. The minimum and maximum limits are expanded for the ATE to account for an ambient range from 22°C to 32°C with a 4-µA/°C temperature coefficient on the supply current.

Copyright © 2017–2018, Texas Instruments Incorporated

7.6 Electrical Characteristics: V_S = 3 V

at V_{S+} = 3 V, $V_{S–}$ = 0 V, R_F = 1 kΩ, R_G = 200 Ω, R_L = 2 kΩ, G = 6 V/V, input and output referenced to midsupply, and T_A ≈ 25°C, (unless otherwise noted)

PARAMETER		TEST CONDITIONS	MIN	TYP	MAX	UNIT	TEST LEVEL(1)
AC PERFORMANCE							
SSBW	Small-signal bandwidth	V_{OUT} = 20 mV_{PP}, G = 6 (peaking < 4 dB)	70	86		MHz	C
		V_{OUT} = 20 mV_{PP}, G = 10, R_F = 1.6 kΩ		50			C
		V_{OUT} = 20 mV_{PP}, G = 100, R_F = 16.9 kΩ		3			C
GBP	Gain-bandwidth product	V_{OUT} = 20 mV_{PP}, G = 100	240	300		MHz	C
LSBW	Large-signal bandwidth	V_{OUT} = 2 V_{PP}, G = 6		45		MHz	C
	Bandwidth for 0.1-dB flatness	V_{OUT} = 200 mV_{PP}, G = 6		9		MHz	C
SR	Slew rate	From LSBW(2)	250	350		V/µs	C
	Overshoot, undershoot	V_{OUT} = 1-V step, G = 6, input t_R = 6 ns		2%	4%		C
t_R, t_F	Rise, fall time	V_{OUT} = 1-V step, G = 6, input t_R = 6 ns		6.3	7	ns	C
	Settling time to 0.1%	V_{OUT} = 1-V step, G = 6, input t_R = 6 ns		30		ns	C
	Settling time to 0.01%	V_{OUT} = 1-V step, G = 6, input t_R = 6 ns		40		ns	C
HD2	Second-order harmonic distortion	f = 100 kHz, V_O = 2 V_{PP}, G = 6 (see 图 74)		–108		dBc	C
HD3	Third-order harmonic distortion	f = 100 kHz, V_O = 2 V_{PP}, G = 6 (see 图 74)		–125		dBc	C
	Input voltage noise	f > 1 kHz		1.8		nV/√Hz	C
	Voltage noise 1/f corner frequency			100		Hz	C
	Input current noise	f > 100 kHz		1.0		pA/√Hz	C
	Current noise 1/f corner frequency			7		kHz	C
	Overdrive recovery time	G = 6, 2x output overdrive, DC-coupled		50		ns	C
	Closed-loop output impedance	f = 1 MHz, G = 6		0.3		Ω	C
DC PERFORMANCE							
A_{OL}	Open-loop voltage gain	V_O = ±1 V, R_L = 2 kΩ	110	125		dB	A
	Input-referred offset voltage	T_A ≈ 25°C	–125	±15	125	µV	A
		T_A = 0°C to 70°C	–165	±15	200		B
		T_A = –40°C to 85°C	–230	±15	220		B
		T_A = –40°C to 125°C	–230	±15	285		B
	Input offset voltage drift(3)	T_A = –40°C to 125°C (4)	–1.6	±0.4	1.6	µV/°C	B
	Input bias current(5)	T_A ≈ 25°C	.7	1.5	2.8	µA	A
		T_A = 0°C to 70°C	.2	1.5	3.5		B
		T_A = –40°C to 85°C	.2	1.5	3.7		B
		T_A = –40°C to 125°C	.2	1.5	4.4		B
	Input bias current drift(3)	T_A = –40°C to 125°C	4.5	7.8	17	nA/°C	B
	Input offset current	T_A ≈ 25°C	–70	±20	70	nA	A
		T_A = 0°C to 70°C	–83	±20	93		B
		T_A = –40°C to 85°C	–105	±20	100		B
		T_A = –40°C to 125°C	–105	±13	120		B
	Input offset current drift(3)	T_A = –40°C to 125°C	–500	±20	500	pA/°C	B

(1) Test levels (all values set by characterization and simulation): (A) 100% tested at 25°C, overtemperature limits by characterization and simulation; (B) Not tested in production, limits set by characterization and simulation; (C) Typical value only for information.
(2) This slew rate is the average of the rising and falling time estimated from the large-signal bandwidth as: $(0.8 \times V_{PEAK} / \sqrt{2}) \times 2\pi \times f_{-3dB}$ where this f_{-3dB} is the typical measured 2-V_{PP} bandwidth at gains of 6 V/V.
(3) Input offset voltage drift, input bias current drift, and input offset current drift are average values calculated by taking data at the end points, computing the difference, and dividing by the temperature range.
(4) Input offset voltage drift, input bias current drift, and input offset current drift typical specifications are mean ± 1σ characterized by the full temperature range end-point data. Maximum drift specifications are set by the min, max packaged test range on the wafer-level screened drift. Drift is not specified by the final automated test equipment (ATE) or by QA sample testing.
(5) Current is considered positive out of the pin.

Copyright © 2017–2018, Texas Instruments Incorporated

Electrical Characteristics: V_S = 3 V (continued)

at V_{S+} = 3 V, $V_{S–}$ = 0 V, R_F = 1 kΩ, R_G = 200 Ω, R_L = 2 kΩ, G = 6 V/V, input and output referenced to midsupply, and T_A ≈ 25°C, (unless otherwise noted)

PARAMETER		TEST CONDITIONS	MIN	TYP	MAX	UNIT	TEST LEVEL(1)
INPUT							
	Common-mode input range, low	T_A ≈ 25°C, CMRR > 92 dB		$V_{S–}$ – 0.2	$V_{S–}$ – 0	V	A
		T_A = –40°C to 125°C, CMRR > 92 dB		$V_{S–}$ – 0			B
	Common-mode input range, high	T_A ≈ 25°C, CMRR > 92 dB	V_{S+} – 1.3	V_{S+} – 1.2		V	A
		T_A = –40°C to 125°C, CMRR > 92 dB		V_{S+} – 1.3			B
CMRR	Common-mode rejection ratio		95	105		dB	A
	Input impedance common-mode			55 || 1.1		MΩ || pF	C
	Input impedance differential mode			30 || 1.3		kΩ || pF	C
OUTPUT							
V_{OL}	Output voltage, low	T_A ≈ 25°C, G = 6		$V_{S–}$ + 0.05	$V_{S–}$ + 0.1	V	A
		T_A = –40°C to 125°C, G = 6		$V_{S–}$ + 0.1	$V_{S–}$ + 0.2		B
V_{OH}	Output voltage, high	T_A ≈ 25°C, G = 6	V_{S+} – 0.1	V_{S+} – 0.05		V	A
		T_A = –40°C to 125°C, G = 6	V_{S+} – 0.2	V_{S+} – 0.1			B
	Maximum current into a resistive load	T_A ≈ 25°C, ±0.77 V into 26.7 Ω, V_{IO} < 2 mV	±28	±30		mA	A
	Linear current into a resistive load	T_A ≈ 25°C, ±0.88 V into 37 Ω, A_{OL} > 70 dB	±23	±25		mA	A
		T_A = –40°C to 125°C, ±0.76 V into 37 Ω, A_{OL} > 70 dB	±20	±23			B
	DC output impedance	G = 6		0.02		Ω	C
POWER SUPPLY							
	Specified operating voltage		2.7	5	5.4	V	B
	Quiescent operating current	T_A ≈ 25°C(6)	890	930	970	µA	A
		T_A = –40°C to 125°C	680	930	1290		B
dIq/dT	Quiescent current temperature coefficient	T_A = –40°C to 125°C	2.2	2.7	3.2	µA/°C	B
+PSRR	Positive power-supply rejection ratio		95	110		dB	A
–PSRR	Negative power-supply rejection ratio		90	105		dB	A
POWER DOWN (Pin Must be Driven, SOT23-6 and SC70-6)							
	Enable voltage threshold	Specified *on* above $V_{S–}$ + 1.5 V	1.5			V	A
	Disable voltage threshold	Specified *off* below $V_{S–}$ + 0.55 V			0.55	V	A
	Disable pin bias current	$\overline{PD}$ = $V_{S–}$ to V_{S+}	–50	20	50	nA	A
	Power-down quiescent current	$\overline{PD}$ = 0.55 V		0.1	1	µA	A
	Turnon time delay	Time from $\overline{PD}$ = high to V_{OUT} = 90% of final value		3.5		usec	C
	Turnoff time delay	Time from $\overline{PD}$ = low to V_{OUT} = 10% of original value		100		ns	C

(6) The typical specification is at 25°C T_J. The minimum and maximum limits are expanded for the ATE to account for an ambient range from 22°C to 32°C with a 4-µA/°C temperature coefficient on the supply current.

版权 © 2017–2018, Texas Instruments Incorporated

7.7 Typical Characteristics: V_S = 5 V

V_{S+} = 5 V, $V_{S–}$ = 0 V, R_F = 1 kΩ, R_G = 200 Ω, R_L = 2 kΩ, G = 6 V/V, input and output referenced to midsupply, T_A ≈ 25°C (unless otherwise noted)

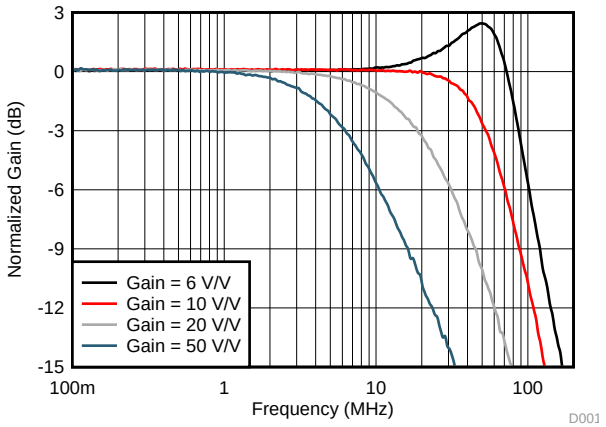

See 图 74 and 表 1 (V_O = 20 mV_{PP}, R_{LOAD} = 2 kΩ)

图 1. Noninverting Small-Signal Frequency Response vs Gain

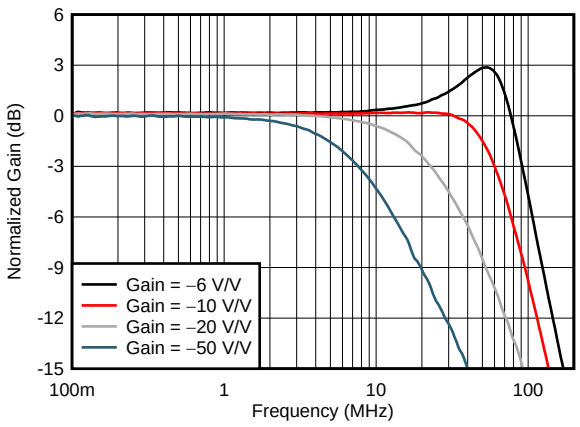

See 图 75 and 表 2 (V_O = 20 mV_{PP}, R_{LOAD}= 2 kΩ)

图 2. Inverting Small-Signal Frequency Response vs Gain

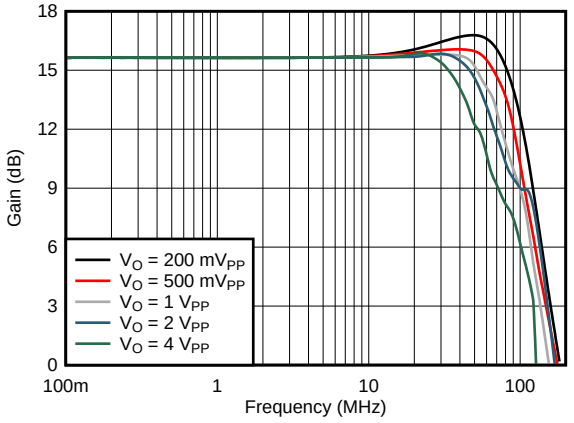

Gain = 6 V/V, R_{LOAD} = 2 kΩ

图 3. Noninverting Large-Signal Bandwidth vs V_{OPP}

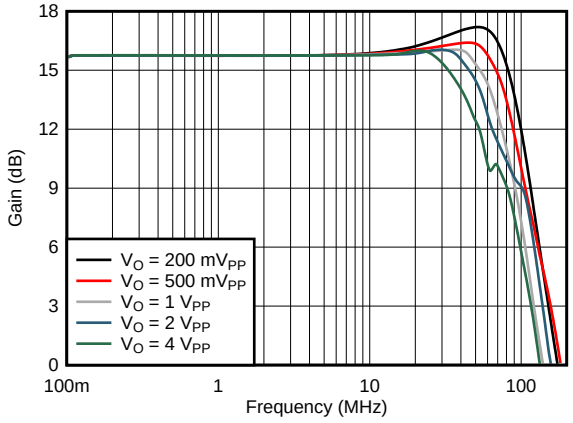

Gain = –6 V/V, R_{LOAD} = 2 kΩ

图 4. Inverting Large-Signal Bandwidth vs V_{OPP}

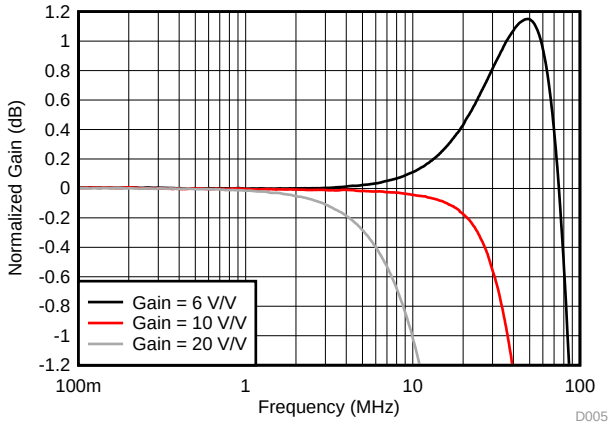

See 图 74 and 表 1 (V_O = 200 mV_{PP}, R_{LOAD} = 2 kΩ)

图 5. Noninverting Response Flatness vs Gain

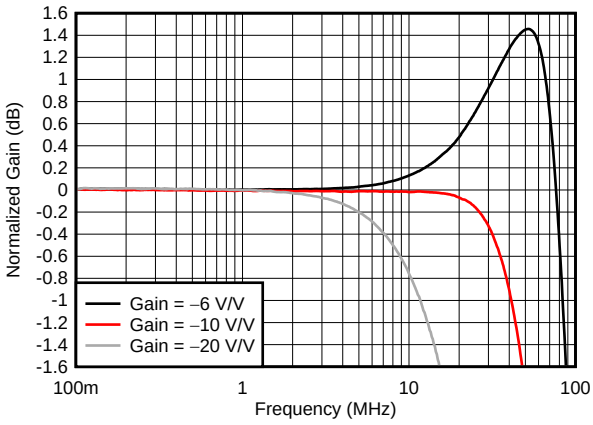

See 图 75 and 表 2 (V_O = 200 mV_{PP}; R_{LOAD} = 2 kΩ)

图 6. Inverting Response Flatness vs Gain

版权 © 2017–2018, Texas Instruments Incorporated

Typical Characteristics: V_S = 5 V (接下页)

V_{S+} = 5 V, $V_{S–}$ = 0 V, R_F = 1 kΩ, R_G = 200 Ω, R_L = 2 kΩ, G = 6 V/V, input and output referenced to midsupply, T_A ≈ 25°C (unless otherwise noted)

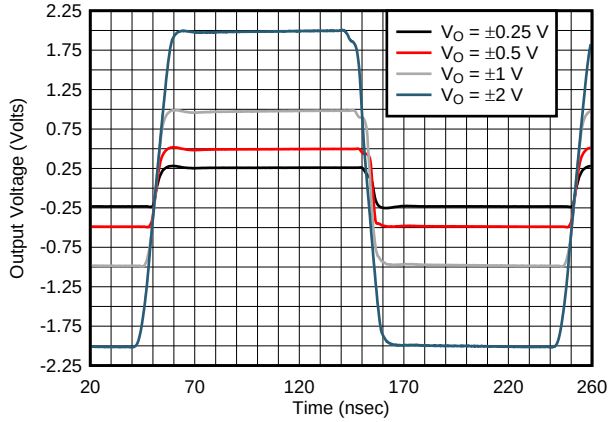

See 图 74 (gain of 6 V/V)

图 7. Noninverting Step Response vs V_{OPP}

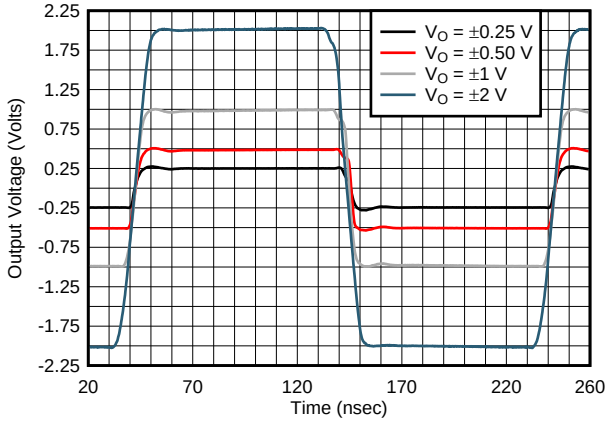

See 图 75 (gain of –6 V/V)

图 8. Inverting Step Response vs V_{OPP}

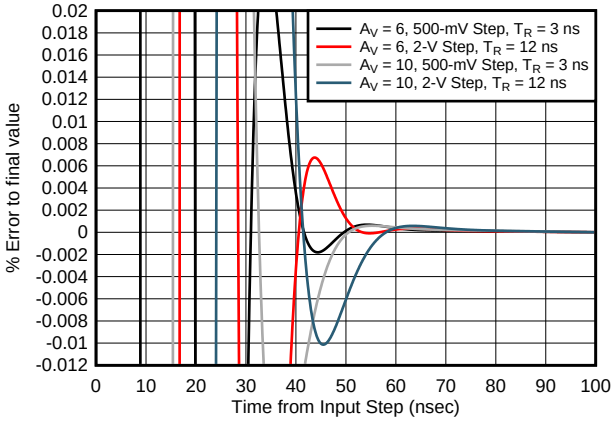

See 图 74 and 表 1

图 9. Simulated Noninverting Settling Time

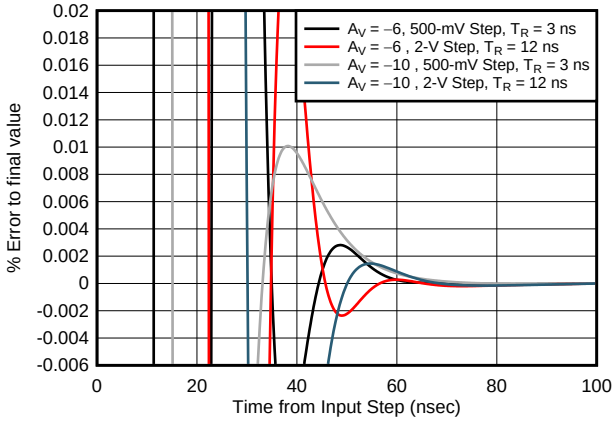

See 图 75 and 表 2

图 10. Simulated Inverting Settling Time

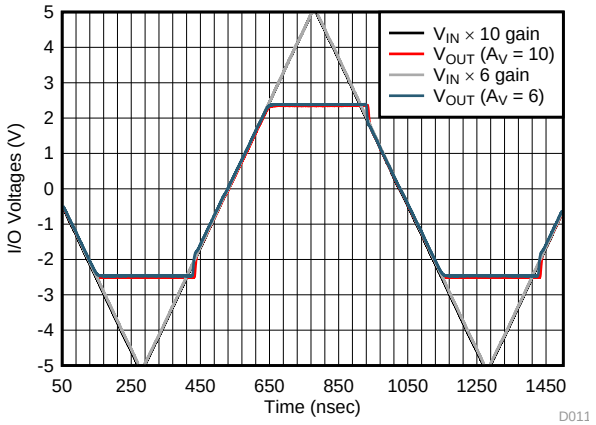

See 图 74 and 表 1

图 11. Noninverting Overdrive Recovery

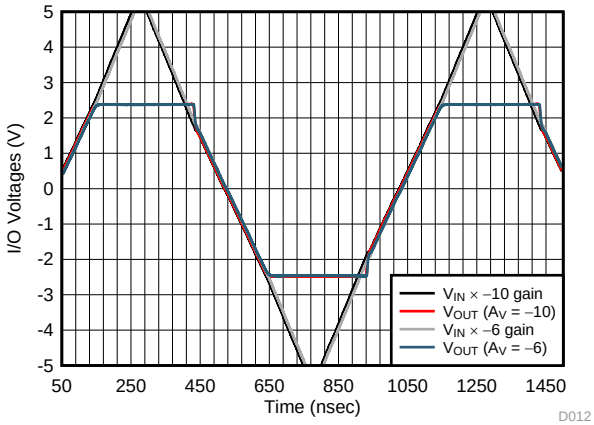

See 图 75 and 表 2

图 12. Inverting Overdrive Recovery

Typical Characteristics: V_S = 5 V (接下页)

V_{S+} = 5 V, $V_{S–}$ = 0 V, R_F = 1 kΩ, R_G = 200 Ω, R_L = 2 kΩ, G = 6 V/V, input and output referenced to midsupply, T_A ≈ 25°C (unless otherwise noted)

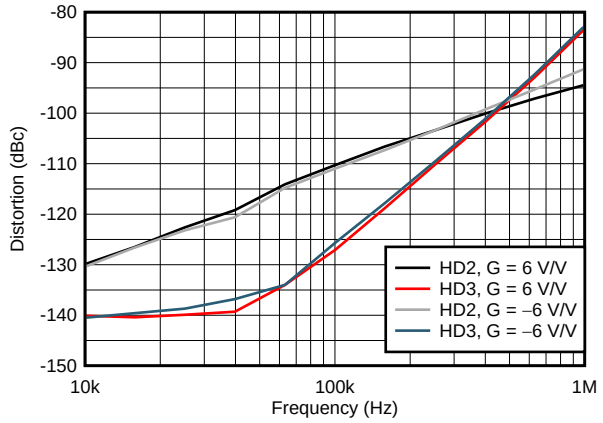

See 图 74, 图 75, 表 1, and 表 2

图 13. Harmonic Distortion vs Frequency

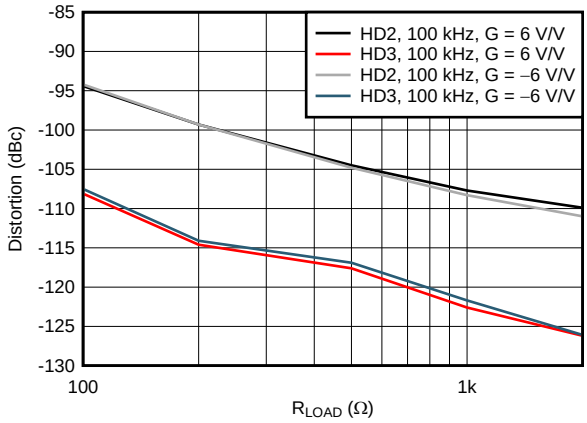

See 图 74, 图 75, 表 1, and 表 2
(V_O = 2 V_{PP}, F = 100 kHz)

图 14. Harmonic Distortion vs R_{LOAD}

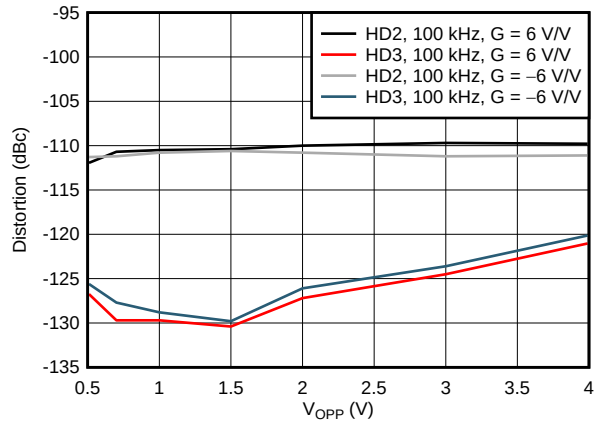

See 图 74, 图 75, 表 1, and 表 2
(F = 100 kHz, R_{LOAD} = 2 kΩ)

图 15. Harmonic Distortion vs Output Swing

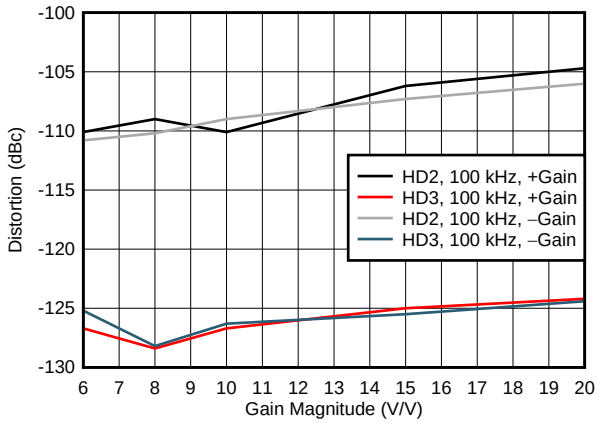

See 图 74, 图 75, 表 1, and 表 2
(V_O = 2 V_{PP}, R_{LOAD} = 2 kΩ, F = 100 kHz)

图 16. Harmonic Distortion vs Gain

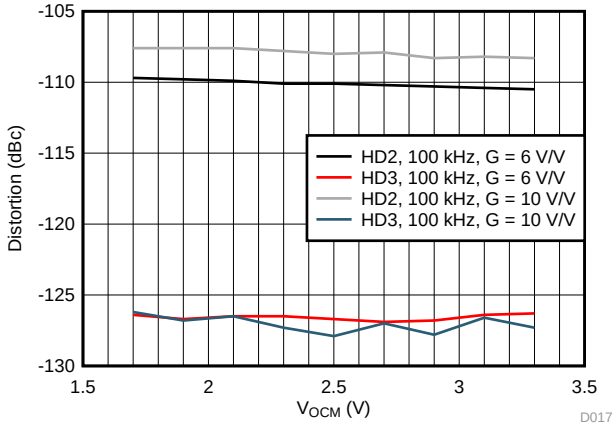

See 图 74 and 表 1
(V_O = 2 V_{PP}, F = 100 kHz, R_{LOAD} = 2 kΩ)

图 17. Noninverting Distortion vs Output Common-Mode Voltage

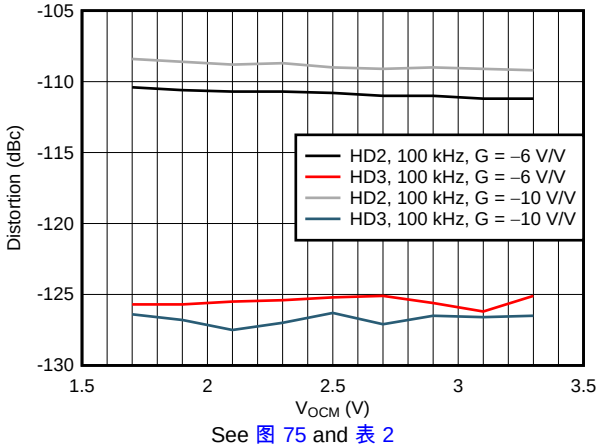

See 图 75 and 表 2
(V_O = 2 V_{PP}, F = 100 kHz, R_{LOAD} = 2 kΩ)

图 18. Inverting Distortion vs Output Common-Mode Voltage

版权 © 2017–2018, Texas Instruments Incorporated

7.8 Typical Characteristics: V_S = 3 V

V_{S+} = 3 V, $V_{S–}$ = 0 V, R_F = 1 kΩ, R_G = 200 Ω, R_L = 2 kΩ, G = 6 V/V, input and output referenced to midsupply. T_A = 25°C (unless otherwise noted)

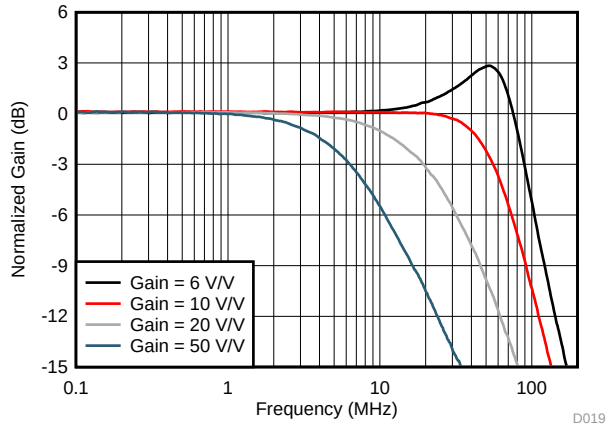

See 图 74 and 表 1

图 19. Noninverting Small-Signal Response vs Gain

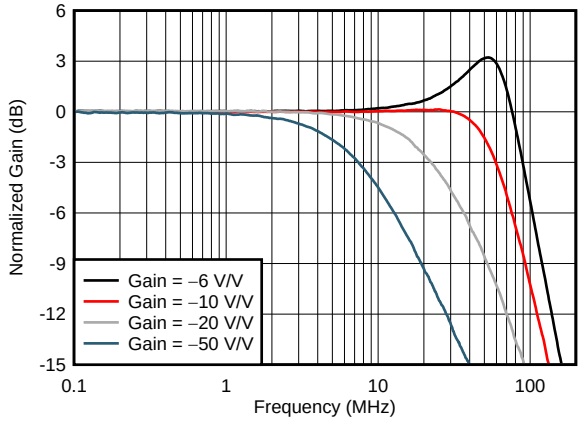

See 图 75 and 表 2

图 20. Inverting Small-Signal Response vs Gain

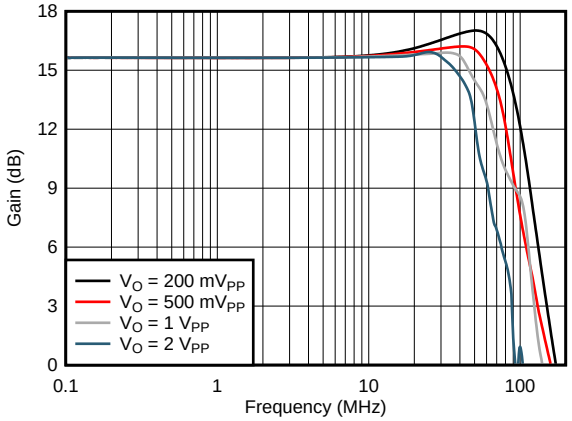

See 图 74 (A_V = 6 V/V)

图 21. Noninverting Large-Signal Bandwidth vs V_{OPP}

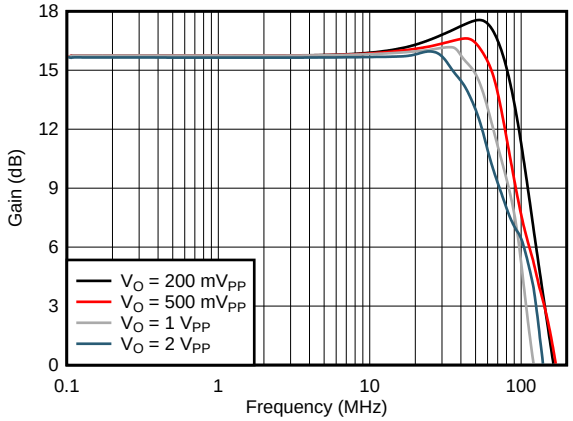

See 图 75 (A_V = –6 V/V)

图 22. Inverting Large-Signal Bandwidth vs V_{OPP}

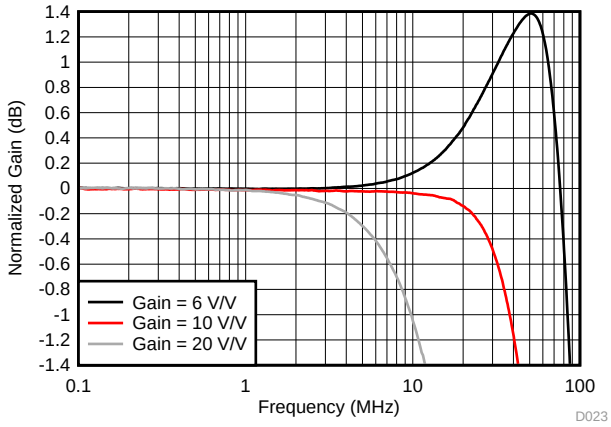

See 图 74 and 表 1 (V_O = 200 mV_{PP}, R_{LOAD} = 2 kΩ)

图 23. Noninverting Response Flatness vs Gain

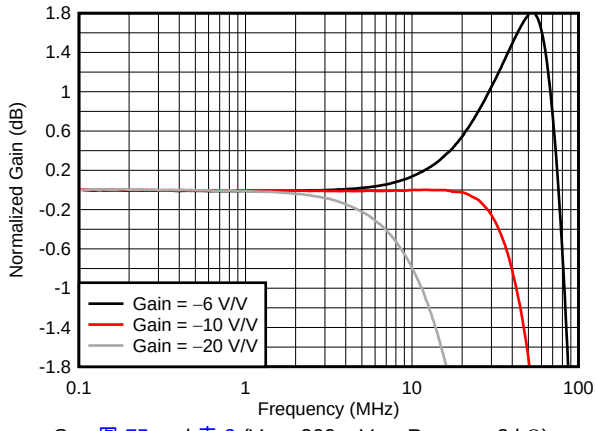

See 图 75 and 表 2 (V_O = 200 mV_{PP}, R_{LOAD} = 2 kΩ)

图 24. Inverting Response Flatness vs Gain

Typical Characteristics: V_S = 3 V (接下页)

V_{S+} = 3 V, $V_{S–}$ = 0 V, R_F = 1 kΩ, R_G = 200 Ω, R_L = 2 kΩ, G = 6 V/V, input and output referenced to midsupply. T_A = 25°C (unless otherwise noted)

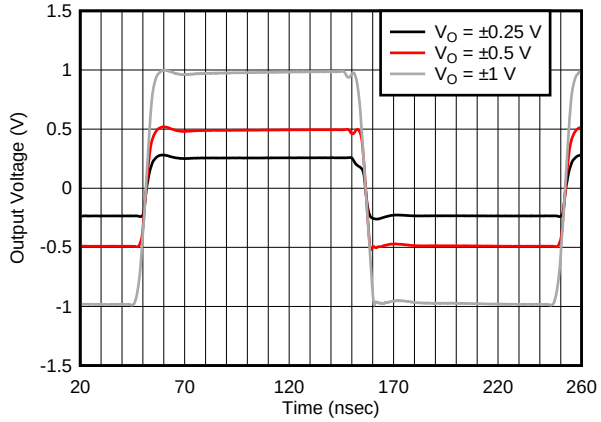

See 图 74 and 表 1

图 25. Noninverting Step Response vs V_{OPP}

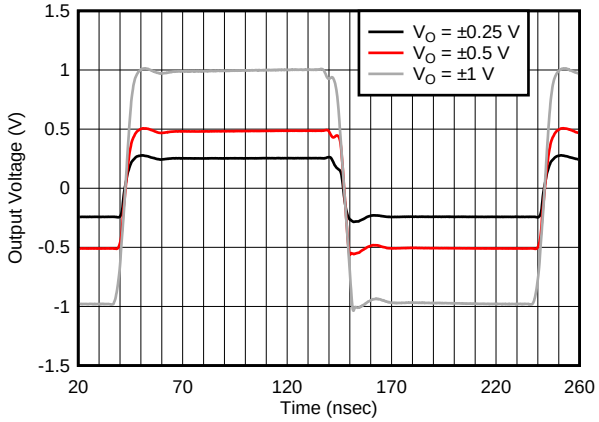

See 图 75 and 表 2

图 26. Inverting Step Response vs V_{OPP}

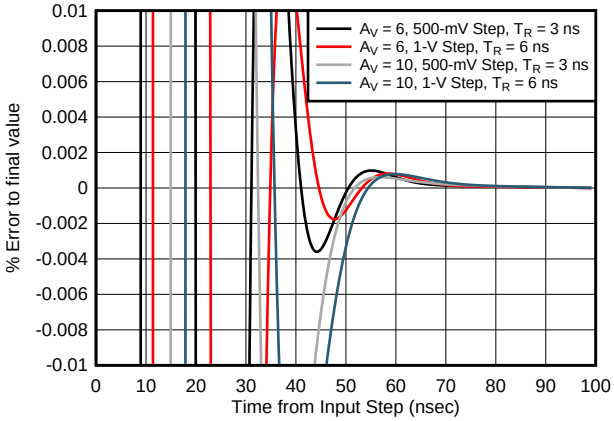

See 图 74 and 表 1

图 27. Noninverting Settling Time

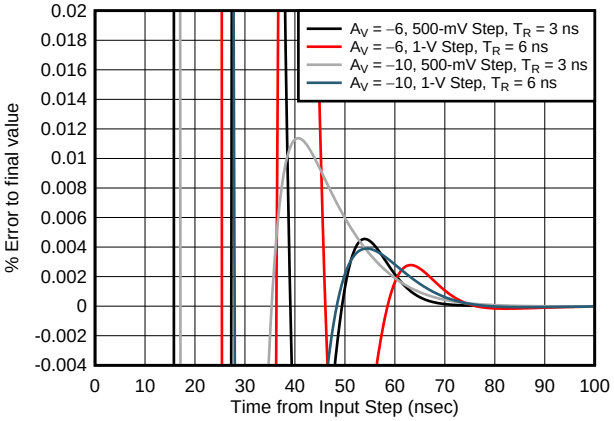

See 图 75 and 表 2

图 28. Inverting Settling Time

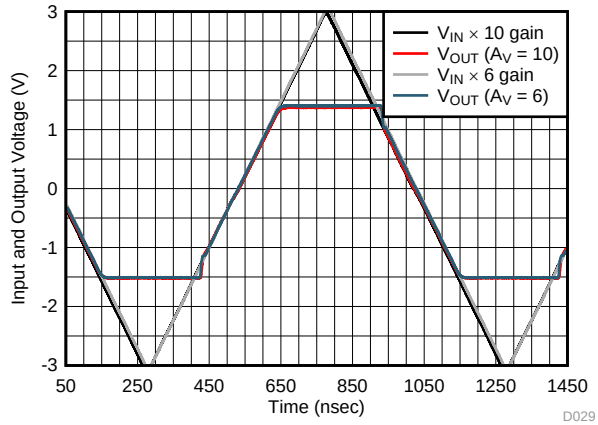

See 图 74 and 表 1

图 29. Noninverting Overdrive Recovery

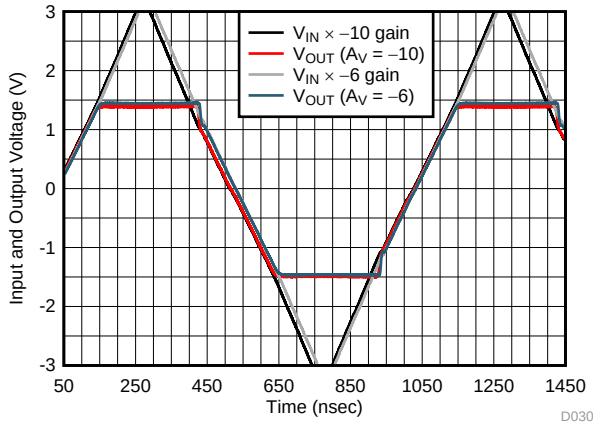

See 图 75 and 表 2

图 30. Inverting Overdrive Recovery

版权 © 2017–2018, Texas Instruments Incorporated

Typical Characteristics: V_S = 3 V (接下页)

V_{S+} = 3 V, $V_{S–}$ = 0 V, R_F = 1 kΩ, R_G = 200 Ω, R_L = 2 kΩ, G = 6 V/V, input and output referenced to midsupply. T_A = 25°C (unless otherwise noted)

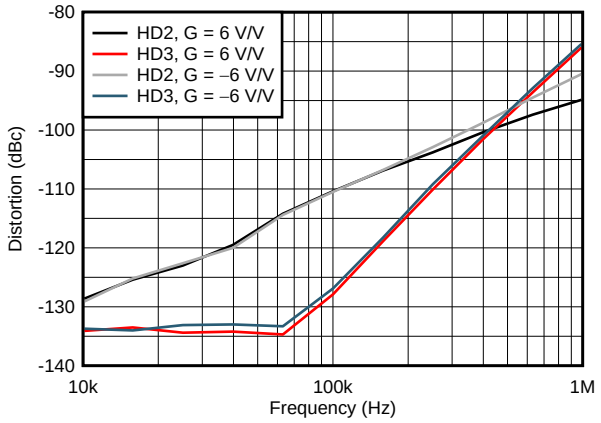

See 图 74, 图 75, 表 1, and 表 2

图 31. Harmonic Distortion vs Frequency

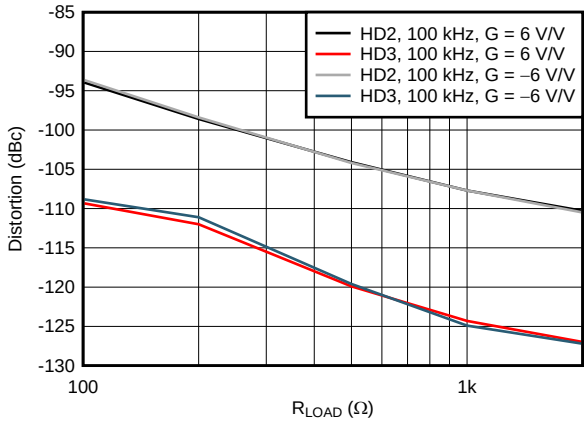

See 图 74, 图 75, 表 1, and 表 2

图 32. Harmonic Distortion vs Load

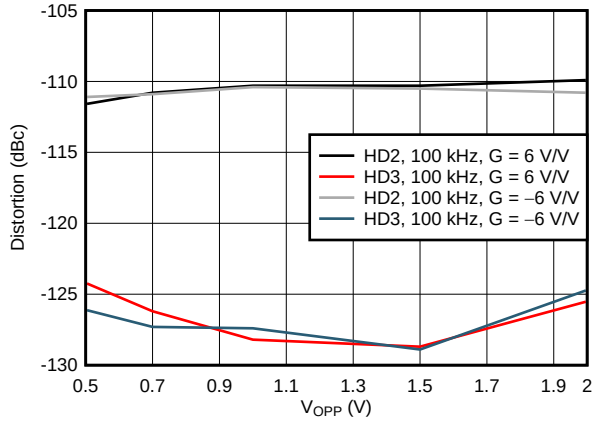

See 图 74, 图 75, 表 1, and 表 2

图 33. Harmonic Distortion vs Output Swing

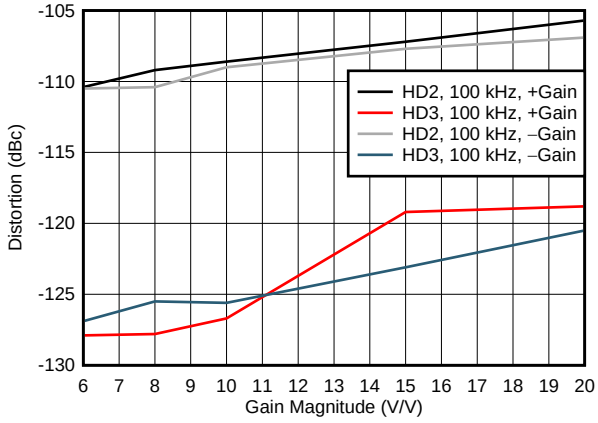

See 图 74, 图 75, 表 1, and 表 2 (2-kΩ load, 2 V_{PP})

图 34. Harmonic Distortion vs Gain

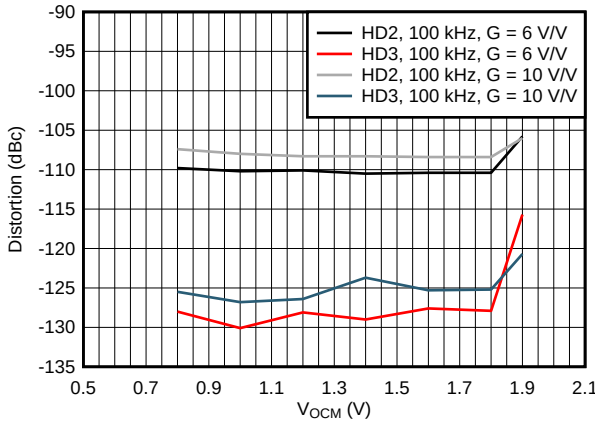

See 图 74 and 表 1 (V_O = 1 V_{PP})

图 35. Noninverting Harmonic Distortion vs Output Common-Mode Voltage

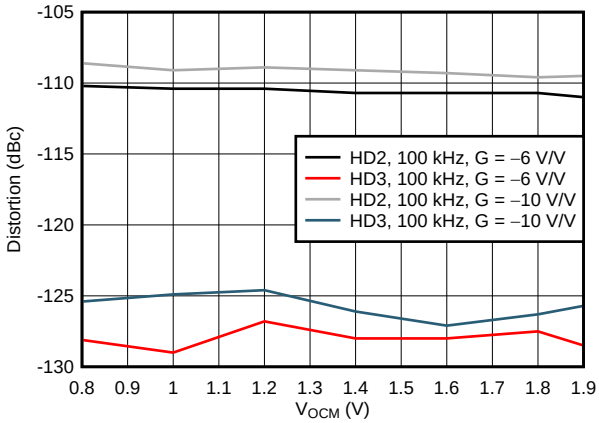

See 图 75 and 表 2 (V_O = 1 V_{PP})

图 36. Inverting Harmonic Distortion vs Output Common-Mode Voltage

7.9 Typical Characteristics: Over Supply Range

$\overline{PD}$ = V_{S+} and T_A = 25°C (unless otherwise noted)

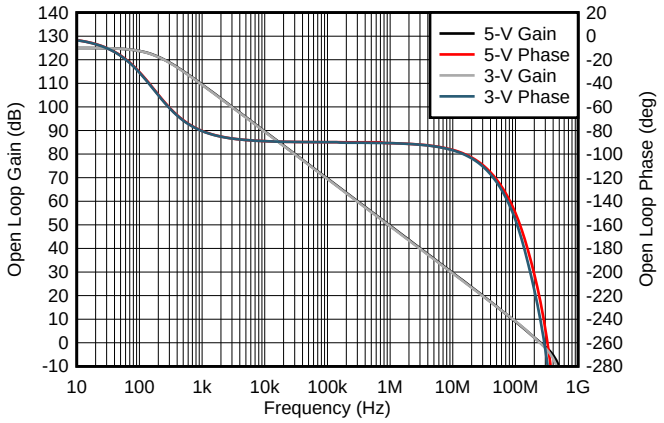

No load, simulation

图 37. Open-Loop Gain and Phase

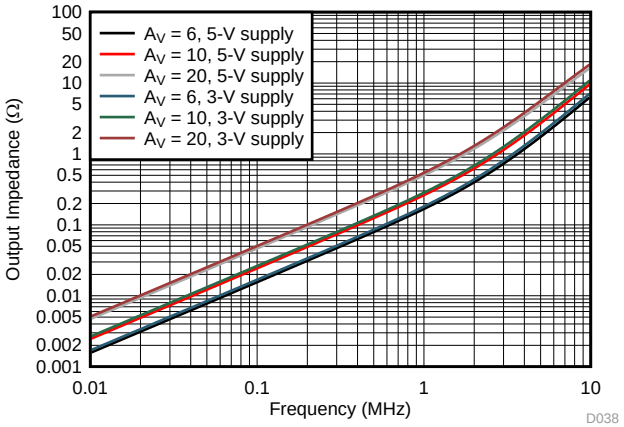

See 图 74 and 表 1 (simulation)

图 38. Closed-Loop Output Impedance

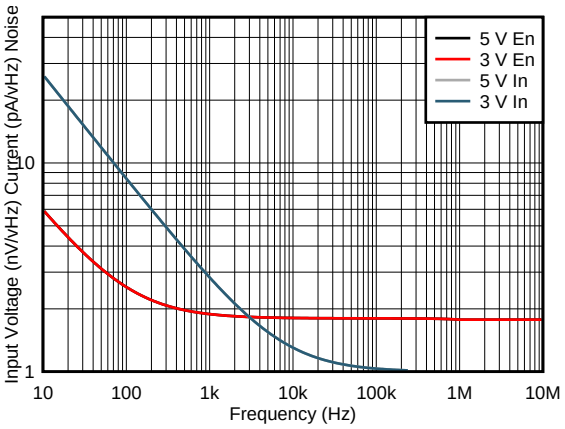

图 39. Input Spot Noise Density

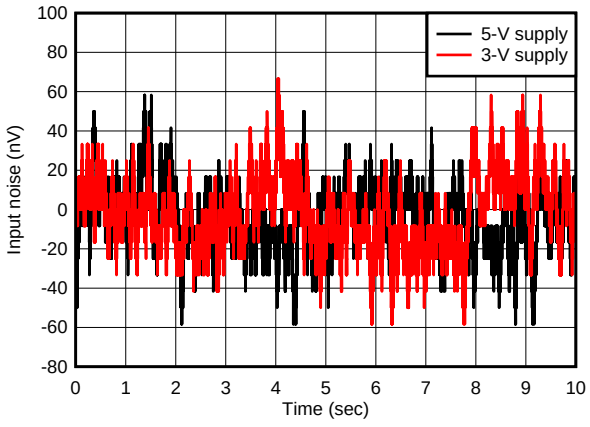

Input referred

图 40. Low-Frequency Voltage Noise

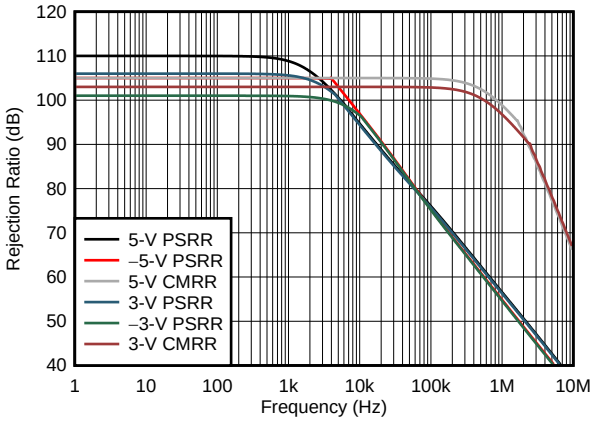

Simulated results

图 41. PSRR and CMRR

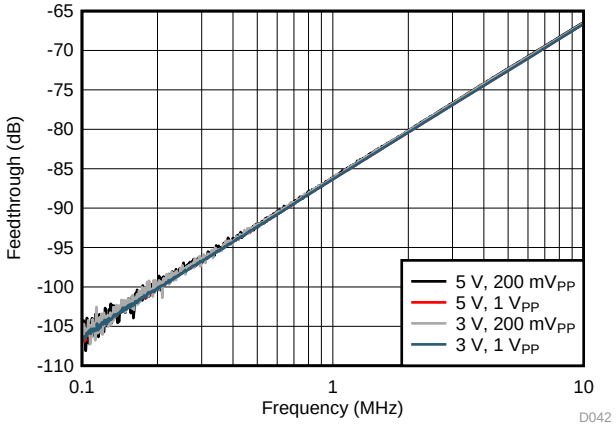

Measured, A_V = 6 V/V, 100-Ω load

图 42. Disabled Isolation Noninverting Input to Output

版权 © 2017–2018, Texas Instruments Incorporated

Typical Characteristics: Over Supply Range (接下页)

$\overline{PD}$ = V_{S+} and T_A = 25°C (unless otherwise noted)

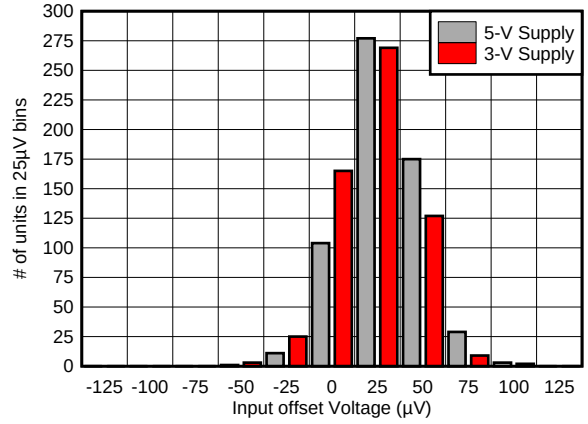

600 units at each supply voltage

图 43. Input Offset Voltage Distribution

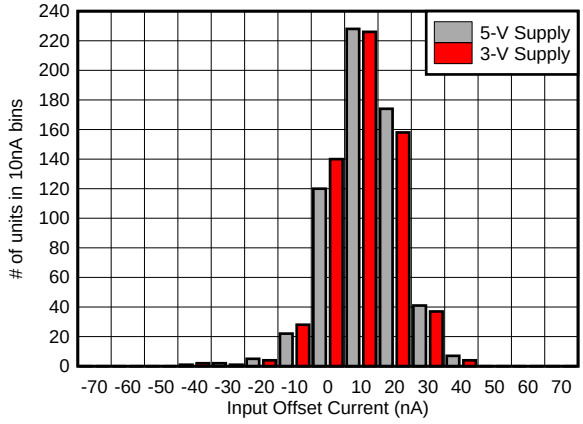

600 units at each supply voltage

图 44. Input Offset Current Distribution

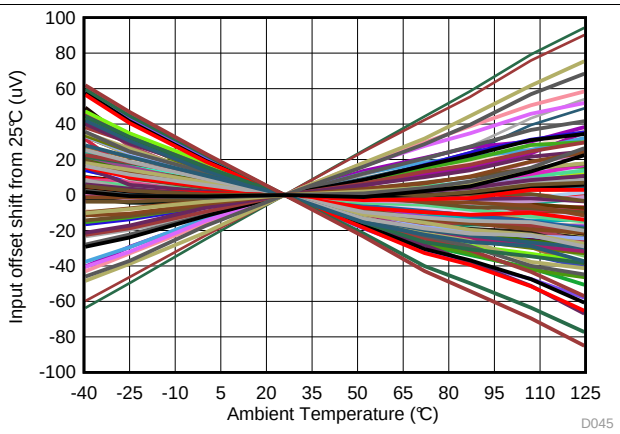

51 units at 5-V and 3-V supply

图 45. Input Offset Voltage vs Temperature

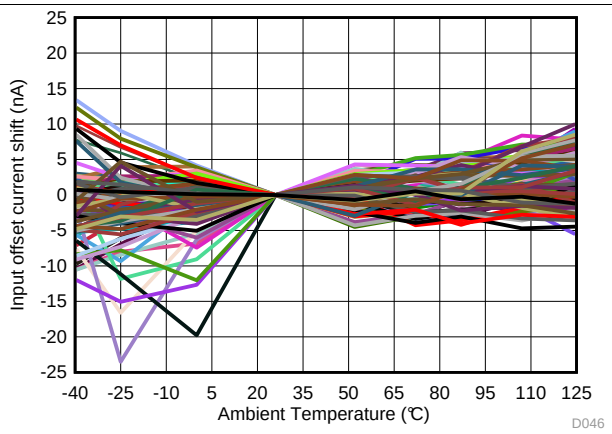

51 units at 5-V and 3-V supply

图 46. Input Offset Current vs Temperature

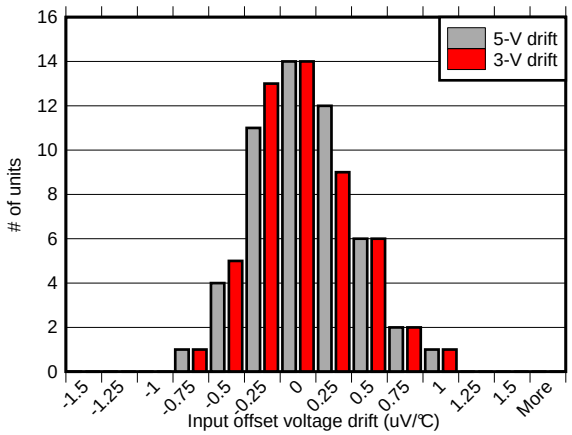

51 units at each supply

图 47. Input Offset Voltage Drift Distribution

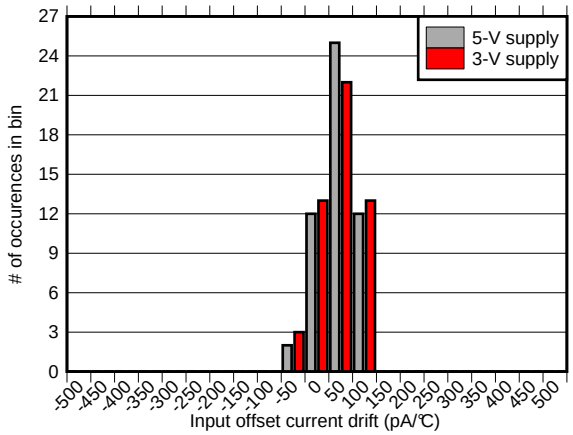

51 units at each supply

图 48. Input Offset Current Drift Distribution

Typical Characteristics: Over Supply Range (接下页)

$\overline{PD}$ = V_{S+} and T_A = 25°C (unless otherwise noted)

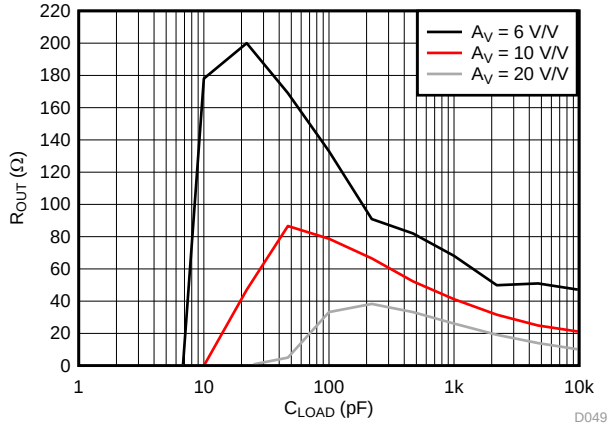

See 图 66 and 表 1
(small signal, targeting 30° phase margin)

图 49. Output Resistor vs C_{LOAD}

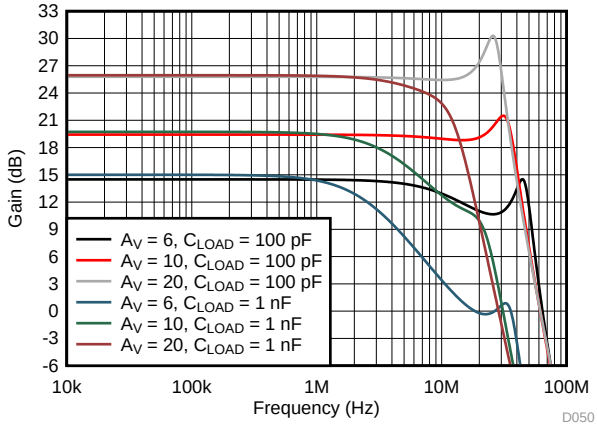

See 图 66 and 表 1
(2-kΩ parallel load to C_{LOAD})

图 50. Small-Signal Response Shapes vs C_{LOAD} With Recommended R_{OUT}

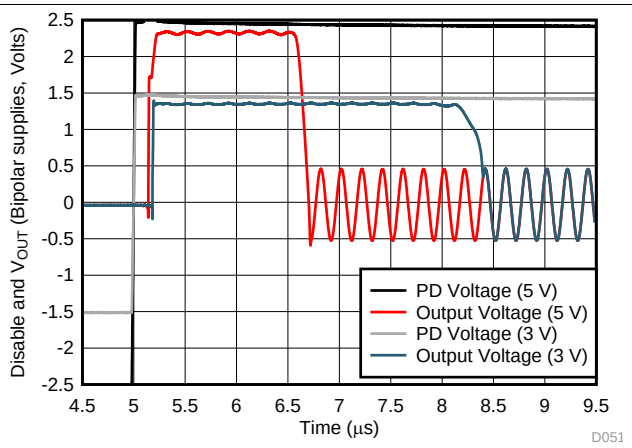

图 51. Turnon Time to Sinusoidal Input

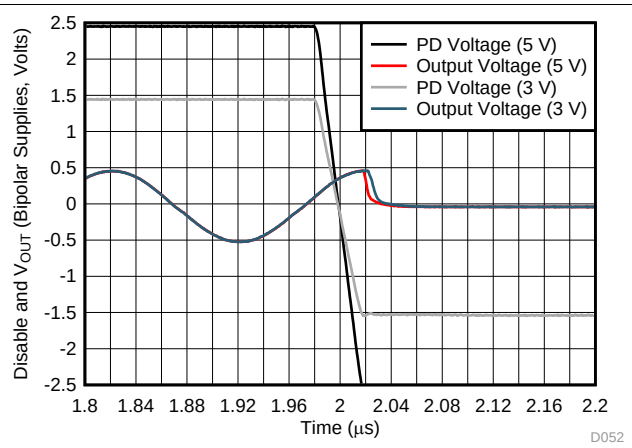

图 52. Turnoff Time to Sinusoidal Input

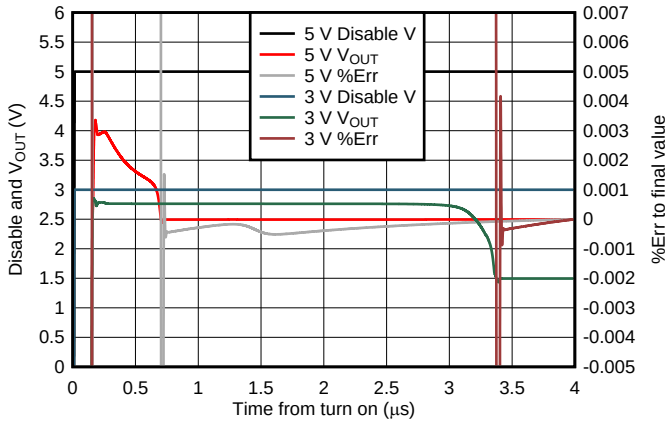

Single-supply, DC input to produce midscale output (simulation)

图 53. Gain of 6-V/V Turnon Time to Final DC Value at Midscale

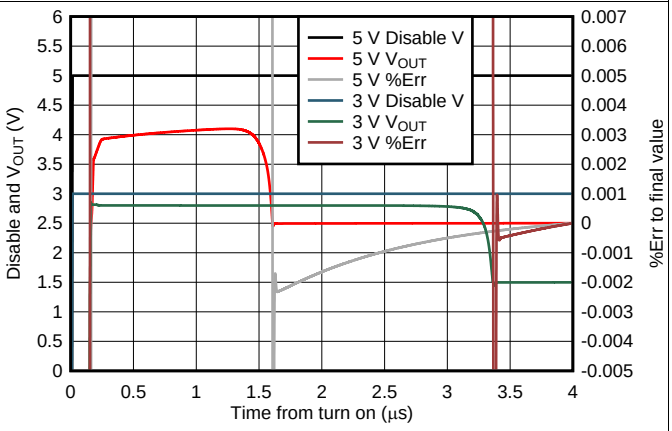

Single-supply, DC input to produce midscale output (simulation)

图 54. Gain of 10-V/V Turnon Time to Final DC Value at Midscale

版权 © 2017–2018, Texas Instruments Incorporated

Typical Characteristics: Over Supply Range (接下页)

$\overline{PD}$ = V_{S+} and T_A = 25°C (unless otherwise noted)

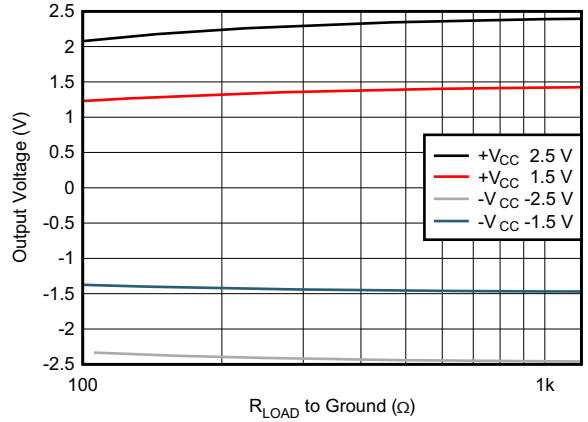

图 55. Output Voltage Swing vs Load Resistor

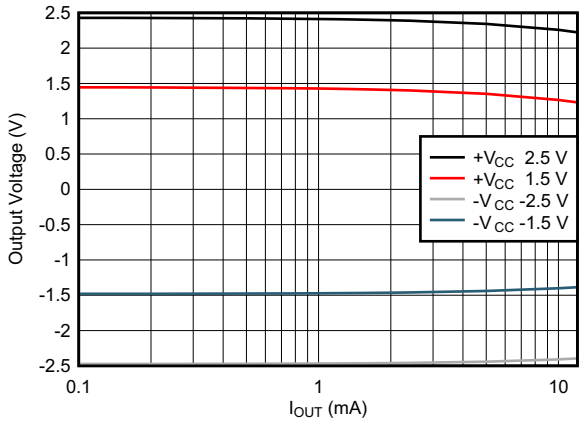

图 56. Output Saturation Voltage vs Load Current

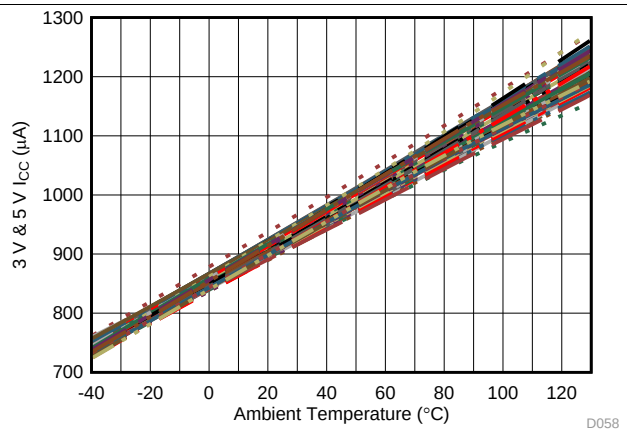

图 57. Quiescent Current vs Temperature

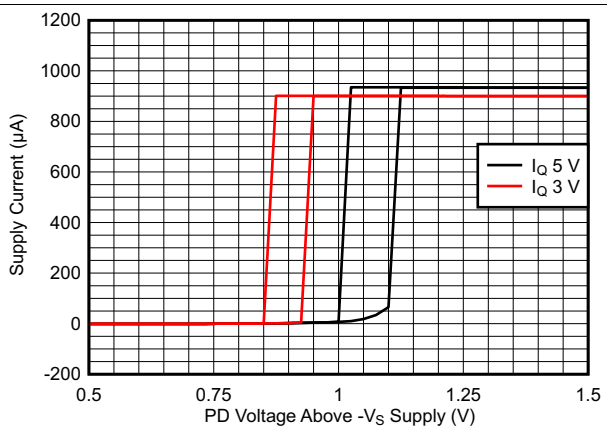

图 58. Supply Current vs Power-Down Voltage: Turnon Higher Than Turnoff

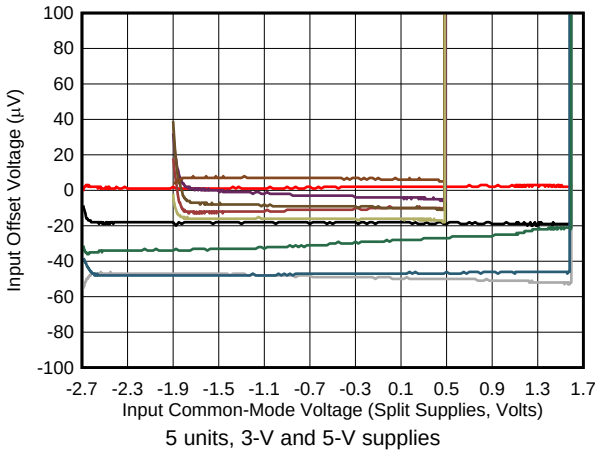

图 59. Input Offset Voltage vs Input Common-Mode Voltage

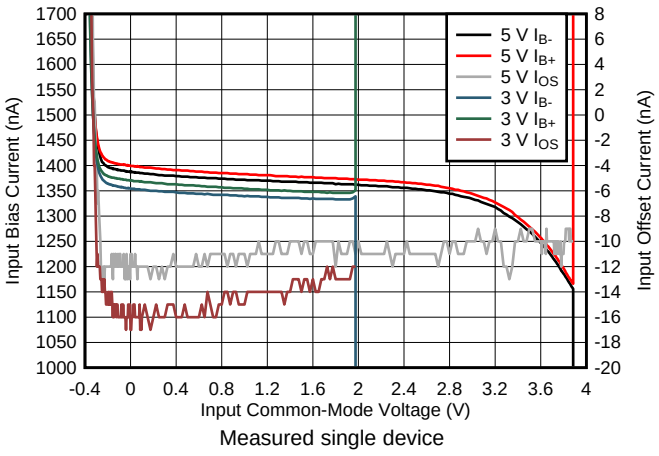

图 60. Input Bias and Offset Current vs V_{ICM}

8 Detailed Description

8.1 Overview

The OPA838 is a power efficient, decompensated, voltage feedback amplifier (VFA). Combining a negative rail input stage and a rail-to-rail output (RRO) stage, the device provides a flexible solution where higher gain or transimpedance designs are required. This 300-MHz gain bandwidth product (GBP) amplifier requires less than 1 mA of supply current over a 2.7 to 5.4-V total supply operating range. A shutdown feature on the 6-pin package versions provides power savings where the system requires less than 1 µA when shut down. A decompensated amplifier operating at low gains (less than 6 V/V) may experience a low phase margin that may risk oscillation. The TINA model for the OPA838 predicts those conditions.

8.2 Functional Block Diagram

The OPA838 is a standard voltage feedback op amp with two high-impedance inputs and a low-impedance output. Standard applications circuits are supported; see 图 61 and 图 62. These application circuits are shown with a DC V_{REF} on the inputs that set the DC operating points for single-supply designs. The V_{REF} is often ground, especially for split-supply applications.

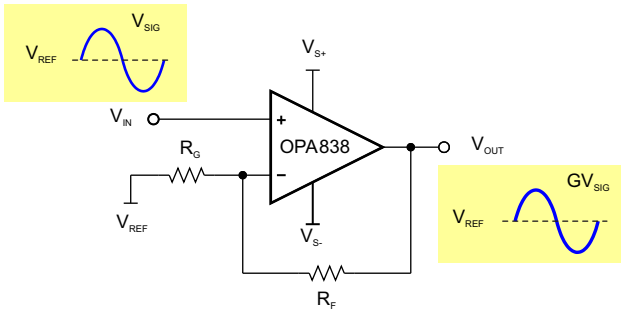

图 61. Noninverting Amplifier

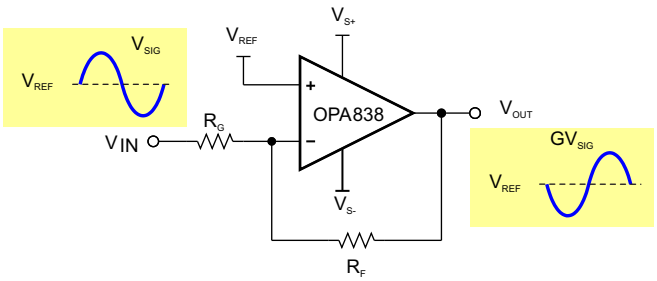

图 62. Inverting Amplifier

8.3 Feature Description

8.3.1 Input Common-Mode Voltage Range

When the primary design goal is a linear amplifier with high CMRR, the input pins must stay within the input operating range (V_{ICR}.) These are referenced off of each supply as an input headroom requirement. Ensured operation at 25°C is maintained to the negative supply voltage and to within 1.3 V of the positive supply voltage. The common-mode input range specifications in the table data use CMRR to set the limit. The limits are selected to ensure CMRR does not degrade more than 3 dB below the minimum CMRR value if the input voltage is within the specified range.

Assuming the op amp is in linear operation, the voltage difference between the input pins is small (0 V) and the input common-mode voltage is analyzed at either input pin, assuming the other input pin is at the same potential. The voltage at V_{IN+} is simple to evaluate. In noninverting configuration (see 图 61), the input signal (V_{IN}) must not violate the V_{ICR}. In inverting configuration (see 图 62), the reference voltage (V_{REF}), must be within the V_{ICR}.

版权 © 2017–2018, Texas Instruments Incorporated

Feature Description (接下页)

The input voltage limits have fixed headroom to the power rails and track the power supply voltages. For a single 5-V supply, the linear 25°C minimum input voltage ranges from 0 V to 3.7 V, and 0 V to 1.4 V for a single 2.7-V supply. The delta headroom from each power supply rail is the same in each case (0 V and 1.3 V).

8.3.2 Output Voltage Range

The OPA838 device is a rail-to-rail output op amp. Rail-to-rail output typically means that the output voltage swings to within 100 mV of the supply rails. There are different ways to specify this: one is with the output still in linear operation and another is with the output saturated. Saturated output voltages are closer to the power supply rails than linear outputs, but the signal is not a linear representation of the input. Saturation and linear operation limits are affected by the output current, where higher currents lead to more voltage loss in the output transistors; see 图 56.

The specification tables show saturated output voltage specifications with a 2-kΩ load. 图 11 and 图 43 illustrate saturated voltage-swing limits versus output load resistance, and 图 12 and 图 44 illustrate the output saturation voltage versus load current. With a light load, the output voltage limits have constant headroom to the power rails and track the power supply voltages. For example, with a 1-kΩ load and a single 5-V supply, the linear output voltage ranges from 0.12 V to 4.88 V and ranges from 0.12 V to 2.58 V for a 2.7-V supply. The delta from each power supply rail is the same in each case: 0.12 V.

With devices like the OPA838 where the input range is lower than the output range, the input limits the available signal swing at low gains. Because the OPA838 is intended for higher gains, the smaller input swing range does not limit operation and full rail-to-rail output is available. Inverting voltage gain and transimpedance configurations are typically limited by the output voltage limits of the op amp if the noninverting input pin is biased in range.

8.3.3 Power-Down Operation

The OPA838 includes a power-down feature. Under logic control, the amplifier can switch from normal operation to a standby current of less than 1 µA. When the $\overline{PD}$ pin is connected high (greater than or equal to 1.5 V above the negative supply), the amplifier is active. Connecting the $\overline{PD}$ pin low (less than or equal to 0.55 V above the negative supply) disables the amplifier. To protect the input stage of the amplifier, the device uses internal, back-to-back diodes (two in series each way) between the inverting and noninverting input pins. If the differential voltage in shutdown exceeds 1.2 V, those diodes turn on.

The $\overline{PD}$ pin must be actively driven high or low and must not be left floating. If the power-down mode is not used, $\overline{PD}$ may be tied to the positive supply rail.

When the op amp is powered from a single-supply and ground, with $\overline{PD}$ driven from logic devices with similar V_{DD} voltages to the op amp, no special considerations are required. When the op amp is powered from a split-supply with V_{S-} below ground, an open-collector type of interface with a pullup resistor is more appropriate. Pullup resistor values must be lower than 100 kΩ. Recovery from power down is illustrated in 图 53 and 图 54 for several gains. In single-supply mode with the gain resistor at ground, the output approaches the positive supply on initial power up until the internal nodes charge then recover to the target output voltage; see 图 51 and 图 52.

8.3.4 Trade-Offs in Selecting The Feedback Resistor Value

The OPA838 is specified using a 1-kΩ feedback resistor with a 200-Ω gain resistor to ground in a noninverting gain of 6 V/V configuration. These values give a good compromise, keeping the noise contribution of the resistors well below that of the amplifier noise terms and minimal power in the feedback network as the output voltage swing creates load current back into the feedback network. Decreasing these values improves the noise at the cost of more power dissipated in the feedback network. Low values increase the harmonic distortion as the feedback load decreases. Increasing the R_F value at a particular gain increases the output noise contribution of those resistors possibly becoming dominant. As the feedback resistor values continue to increase (and the R_G at a fixed target gain), there is a loss of phase margin as the impedance that drives the inverting input capacitance brings in an added loop pole at lower frequencies. 图 63 shows this at a gain of 6 V/V with increasing R_F values. This noninverting test shows more peaking as the R_F values increase due to the 1-pF common-mode input capacitance at the inverting input. The TINA simulation model gives excellent prediction of these effects.

Feature Description (接下页)

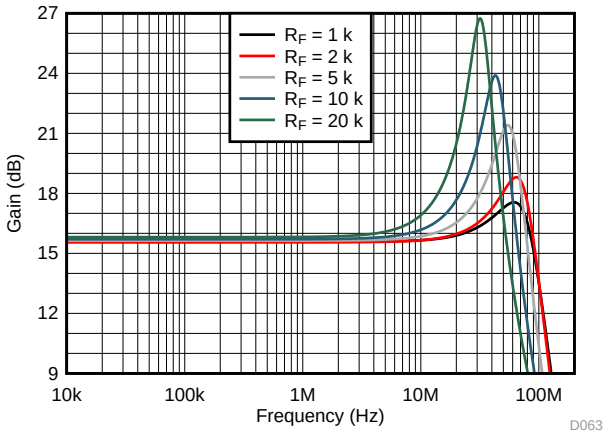

图 63. Frequency Response With Various Feedback Resistor Values

Operating the OPA838 in inverting mode with higher R_F values increases response peaking due to the loss of phase margin effect. In the inverting case, a pair of capacitors can flatten the response at the cost of lower closed-loop bandwidth. 图 64 shows an example with a 20-kΩ R_F value at an inverting gain of –5 V/V (noise gain = 6 V/V) with optional capacitors (C_F and C_G). 图 64 shows optional bias current cancellation elements on the noninverting input. The total resistance value matches the parallel combination of R_G || R_F, which reduces the DC output error term due to bias current to I_{OS} × R_F. The 10-nF capacitor is added across the larger part of this bias current canceling resistance to filter noise and the 20 Ω is split out to isolate the capacitor self resonance from the noninverting input. 图 65 illustrates the small-signal response shape with and without these capacitors. The feedback capacitor (C_F), is selected to set a desired closed-loop bandwidth with R_F. C_G is added to ground to shape the noise gain up over frequency to be greater than or equal to 6 V/V at higher frequencies. In this example, that higher frequency noise gain is 1 + 6 / 1.2 = 6 V/V, adding the 1-pF device common-mode capacitance to the external 5 pF. Using the capacitors to set the feedback ratio removes the pole produced in the feedback driving from purely resistive source to the inverting parasitic capacitance.

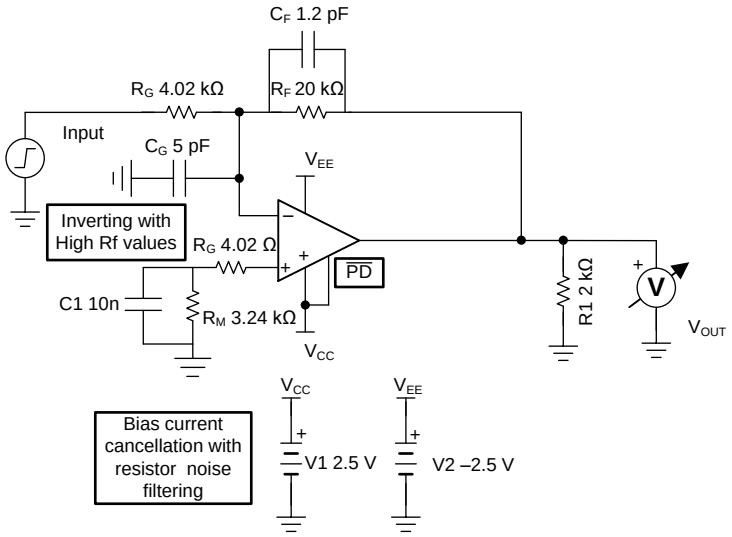

图 64. G = –5 V/V With Optional Compensation

版权 © 2017–2018, Texas Instruments Incorporated

Feature Description (接下页)

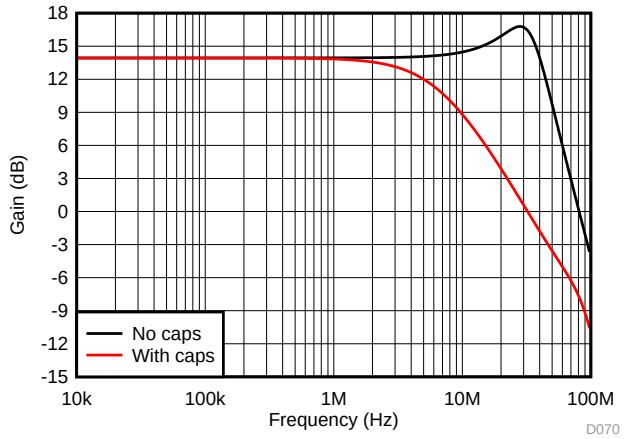

图 65. Inverting Response With and Without Compensation

8.3.5 Driving Capacitive Loads

The OPA838 can drive small capacitive loads directly without oscillation (less than 6 pF). When driving capacitive loads greater than 6 pF, 图 49 illustrates the recommended R_{OUT} vs capacitor load parametric on gains. At higher gains, the amplifier starts with greater phase margin into a resistive load and can operate with lower R_{OUT} for a given capacitive load. Without R_{OUT}, output capacitance interacts with the output impedance of the amplifier, which causes phase shift in the loop gain of the amplifier that reduces the phase margin. This causes peaking in the frequency response with overshoot and ringing in the pulse response. 图 49 targets a 30° phase margin for the OPA838. A 30° phase margin produces a 5.7-dB peaking in the frequency response at the amplifier output pin that is rolled off by the output RC pole; see 图 67. This peaking can cause clipping for large signals driving a capacitive load. Increasing the R_{OUT} value can reduce the peaking at the cost of a more band-limited overall response.

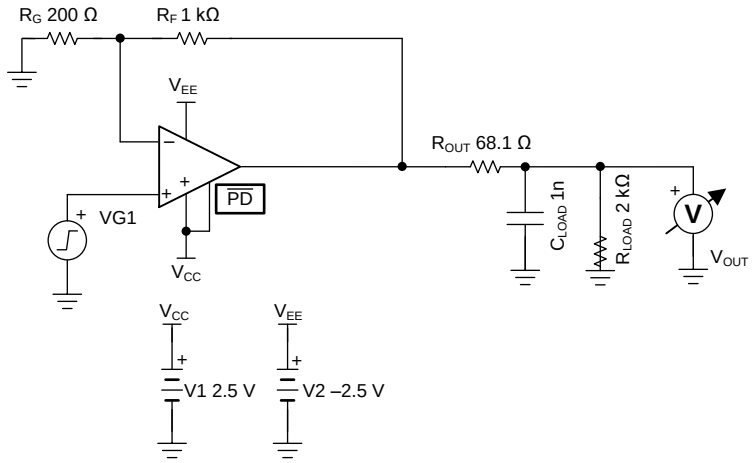

图 66. R_{OUT} versus C_L Test Circuit

Feature Description (接下页)

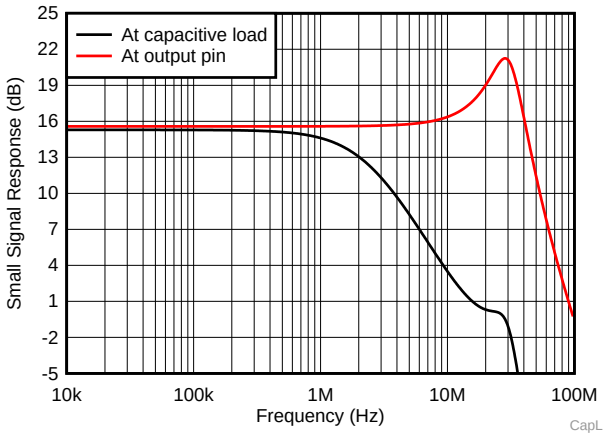

图 67. Frequency Response to Output Pin and Capacitive Load

8.4 Device Functional Modes

8.4.1 Split-Supply Operation (±1.35 V to ±2.7 V)

To facilitate testing with common lab equipment, the OPA838 EVM (see EVM board link) is built to allow split-supply operation. This configuration eases lab testing because the midpoint between the power rails is ground, and most signal generators, network analyzers, oscilloscopes, spectrum analyzers, and other lab equipment have inputs and outputs with a ground reference. This simplifies characterization by removing the requirement for blocking capacitors.

图 68 shows a simple noninverting configuration analogous to 图 61 with a ±2.5-V supply and V_{REF} equal to ground. The input and output swing symmetrically around ground. For ease of use, split-supplies are preferred in systems where signals swing around ground. Using bipolar (or split) supplies shifts the thresholds for the shutdown control. The disable control is referenced from the negative supply. Typically, this is ground in a single-supply application, but using a negative supply requires that the pin is set to within 0.55 V above the negative supply to disable. If disable is not required, connecting that pin to the positive supply ensures correct operation, even for split-supply applications. This disable pin cannot be floated but must be asserted to a voltage.

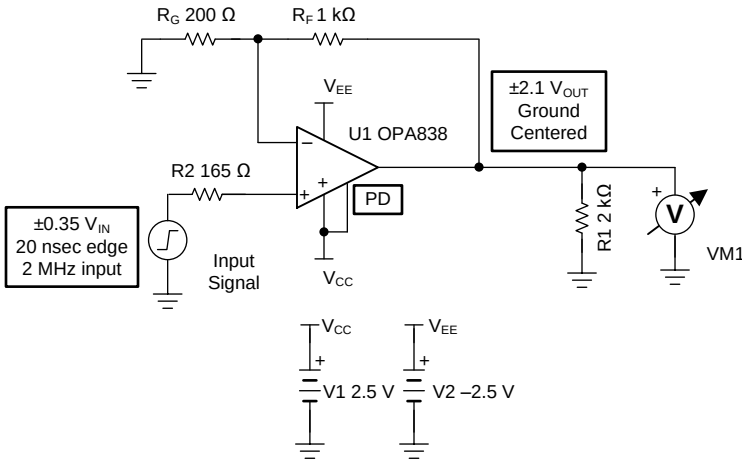

图 68. Split-Supply Operation

版权 © 2017–2018, Texas Instruments Incorporated

Device Functional Modes (接下页)

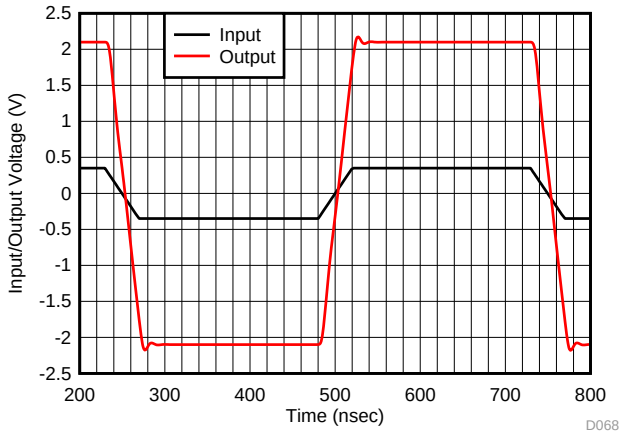

图 69. Bipolar-Supply Step Response

8.4.2 Single-Supply Operation (2.7 V to 5.4 V)

Most newer systems use a single power supply to improve efficiency and to simplify power supply design. The OPA838 can be used with single-supply power (ground for the negative supply) with no change in performance from split supply, as long as the input and output pins are biased within the linear operating region of the device. The outputs nominally swing rail-to-rail with approximately a 100-mV headroom required for linear operation. The inputs can swing below the negative rail (typically ground) and to within 1.3 V of the positive supply. For DC-coupled single-supply operation, the higher gain operating applications typical of a decompensated op amp keep the input swings below the input swing limit to the positive supply. Typically, the 1.3-V input headroom required to the positive supply does not limit operation.

图 70 shows an example design taking a 0 V to 0.5 V input range, level shifting the output up to 0.15 V for a 0-V input using the 4.5-V reference voltage common for 5-V SAR ADCs, and sets the gain to produce a 4.1-V output swing for the 0.5-V input swing. This example is assuming a 0-Ω source that is required to sink the 39 µA required to bias the positive input pin to produce the 0.15-V output for 0-V input. The R_F and R_G values are scaled down slightly to provide bias current cancellation by matching the parallel combination of the two bias set-up resistors on the noninverting input. 图 71 illustrates an example step response for this circuit that produces an output from 0.15 V for a 0-V input to 4.35 V for a 0.5-V input.

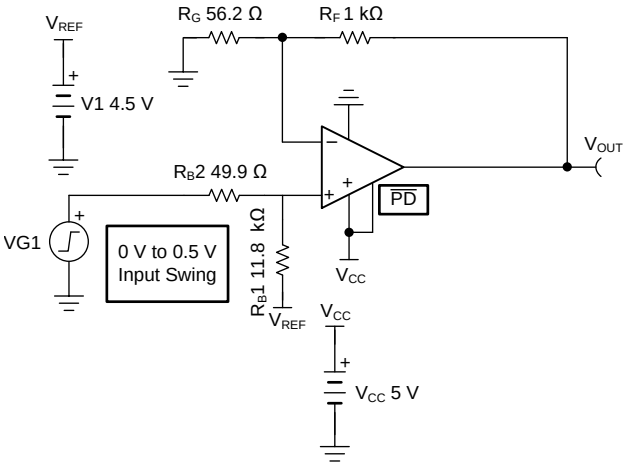

图 70. DC-Coupled, Single-Supply, Noninverting Interface With Output Level Shift

Device Functional Modes (接下页)

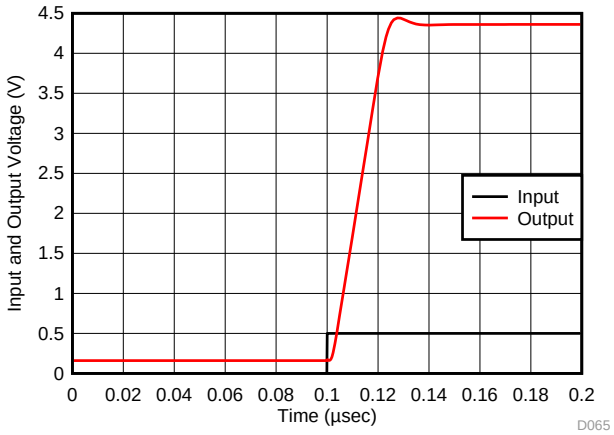

图 71. Unipolar Input to Level Shifted Output Step Response

If AC-coupling is acceptable, a simple way to operate single-supply is to run inverting. 图 72 shows a low-power, high-gain example. In this example, a gain of –20 V/V is implemented (inverting usually does not matter for AC-coupled channels) where the V+ input is biased midscale. This example is showing an optional bias current cancellation setup, which may not be necessary unless the output DC level requires good accuracy. The parallel combination of the divider resistors plus the 80.7-Ω isolating resistor match the feedback resistor value. With the blocking capacitor at the inverting input, the feedback resistor impedance must be matched to achieve bias current cancellation. In this 3-V supply example, the two inputs and the output are biased at 1.5 V. This places the input pins in range and centers the output for maximum V_{PP} available. 图 73 illustrates the small-signal response for this example showing a F_{-3dB} range from a low-end cutoff of 887 Hz set by the input capacitor value to a 17.5-MHz high-frequency cutoff.

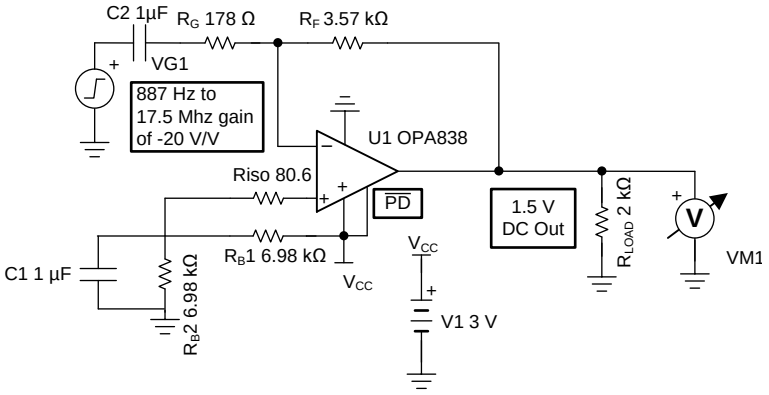

图 72. Single-Supply Inverting Gain Stage With AC-Coupled Input

版权 © 2017–2018, Texas Instruments Incorporated

Device Functional Modes (接下页)

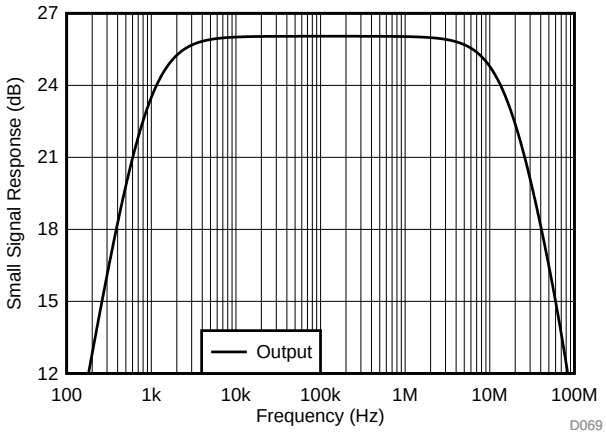

图 73. Inverting Single-Supply Response With AC-Coupled Input

These are only two of the many ways a single-supply design may be implemented. Many others exist where using a DC reference voltage or AC-coupling are common. A good compilation of options can be found in *Single-Supply Op Amp Design Techniques*.

8.5 Power Shutdown Operation

As noted, the 6-pin packages that offer a power shutdown feature must have that pin asserted. To retain the lowest possible shutdown power, no internal pullup resistors are present in the OPA838. The control threshold is referenced off the negative supply with a nominal internal threshold near 1 V above the negative supply. Worst-case tolerances dictate the required low-level voltage to ensure shutdown of 0.55 V or less above the negative supply and 1.5 V or greater above the negative supply to ensure enabled operation. The required control pin current is less than ±50 nA. For SOT-23-6 applications that do not require a shutdown functionality, connect the disable control pin to the positive supply. For SC70 package applications that do not require a shutdown, use the 5-pin package where the control pad is internally connected to the positive supply. When disabled, the output nominally goes to a high impedance. However, the feedback network provides a path for discharge for off state voltage condition. 图 51 illustrates the turnon time with a sinusoidal input that is relatively slow, while 图 52 illustrates the turnoff time is fast. 图 53 and 图 54 illustrate the single-supply operation with a DC input to produce a midsupply output at gains of 6 V/V and 10 V/V. In all cases, the output voltage transitions to a point close to the positive supply voltage and then moves to the desired output voltage 0.5 µs to 1.5 µs after the disable control line goes high. The supply current in shutdown is a low 0.1 µA nominally with a maximum 1 µA.

版权 © 2017–2018, Texas Instruments Incorporated

9 Application and Implementation

注

Information in the following applications sections is not part of the TI component specification, and TI does not warrant its accuracy or completeness. TI's customers are responsible for determining suitability of components for their purposes. Customers should validate and test their design implementation to confirm system functionality.

9.1 Application Information

9.1.1 Noninverting Amplifier

The OPA838 can be used as noninverting amplifier with signal input to the noninverting input (V_{IN+}). 图 61 illustrates a basic block diagram of the circuit. V_{REF} is often ground when split supplies are used.

If $V_{IN} = V_{REF} + V_{SIG}$, and the gain setting resistor (R_G) is DC referenced to V_{REF}, use 公式 1 to calculate the output of the amplifier.

$$V_{OUT} = V_{SIG}\left(1 + \frac{R_F}{R_G}\right) + V_{REF} \quad (1)$$

The noninverting signal gain (also called the noise gain) of the circuit is set by:

$$G = 1 + \frac{R_F}{R_G}$$

V_{REF} provides a reference around which the input and output signals swing. Output signals are in-phase with the input signals within the flat portion of the frequency response. For a high-speed, low-noise device like the OPA838, the values selected for R_F (and the R_G for the desired gain) can strongly influence the operation of the circuit. For the characteristic curves, the noninverting circuit of 图 74 shows the test configuration. 表 1 lists the recommended resistor values over gain.

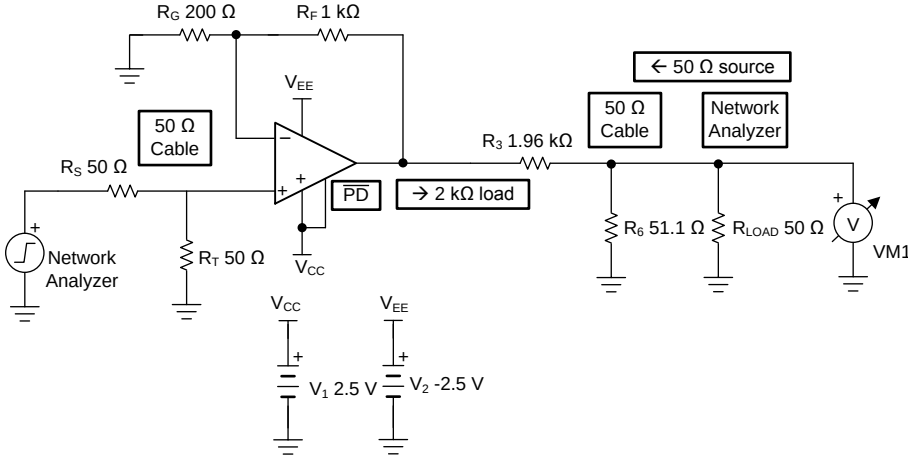

图 74. Noninverting Characterization Circuit

版权 © 2017–2018, Texas Instruments Incorporated

Application Information (接下页)

表 1 lists the recommended resistor values from target gains of 6 V/V to 20 V/V. This table controls the R_F and R_G values to set the resistor noise contribution at approximately 40% of the total output noise power. This increases the spot noise at the output over what the op amp voltage noise produces by 20%. Lower values reduce the output noise of any design at the cost of more power in the feedback circuit. Using the TINA model and simulation tool shows the impact of different resistor value choices on response shape and noise.

表 1. Noninverting Recommended Resistor Values

TARGET AVERAGE	R_F (OHMS)	R_G (OHMS)	ACTUAL GAIN (V/V)	GAIN (dB)
6	1000	200	6	15.56
7	1180	196	7.02	16.93
8	1370	196	7.99	18.05
9	1540	191	9.06	19.15
10	1690	187	10.04	20.03
11	1870	187	11	20.83
12	2050	187	11.96	21.56
13	2210	182	13.14	22.37
14	2370	182	14.02	22.94
15	2550	182	15.01	23.53
16	2740	182	16.05	24.11
17	2870	178	17.12	24.67
18	3090	182	17.98	25.09
19	3240	178	19.20	25.67
20	3400	178	20.1	26.06
21	3570	178	21.06	26.47

9.1.2 Inverting Amplifier

The OPA838 can be used as an inverting amplifier with signal input to the inverting input ($V_{IN–}$) through the gain-setting resistor (R_G.) 图 62 illustrates a basic block diagram of the circuit.

If $V_{IN} = V_{REF} + V_{SIG}$, and the noninverting input is DC biased to V_{REF}, the output of the amplifier may be calculated according to 公式 2.

$$V_{OUT} = V_{SIG}\left(\frac{-R_F}{R_G}\right) + V_{REF} \tag{2}$$

The signal gain of the circuit $G = \frac{-R_F}{R_G}$ and V_{REF} provides a reference point around which the input and output signals swing. For bipolar-supply operation, V_{REF} is often GND. The output signal is 180° out-of-phase with the input signal in the passband of the application. 图 75 illustrates the 50-Ω input matched configuration used for the inverting characterization plots. In this case, an added termination resistor is placed in parallel with the input R_G resistor to provide an impedance match to 50-Ω test equipment. 表 2 lists the suggested values for R_F, R_G, and R_T for inverting gains from –6 V/V to –20 V/V.

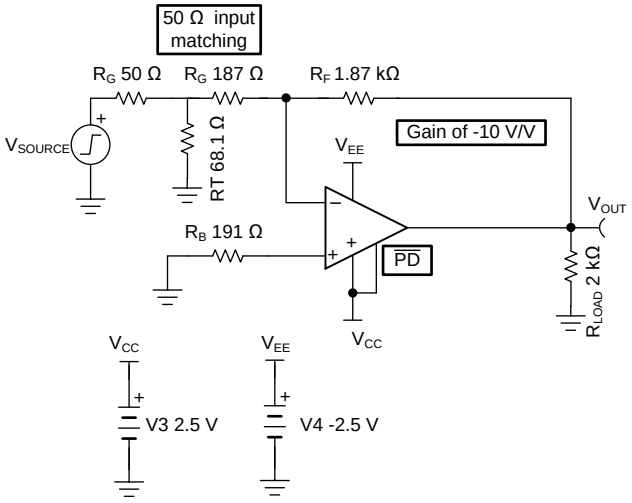

图 75. Inverting With Input Impedance Matching

表 2. Inverting Recommended Resistor Values

AVERAGE	R_F (OHMS)	R_G (OHMS)	EXACT R_T	STANDARD R_T	INPUT Z_I	ACTUAL (V/V)	GAIN (dB)
–6	1180	196	67.1	66.5	49.7	–6.02	15.59
–7	1370	196	67.1	66.5	49.7	–6.99	16.89
–8	1540	191	67.7	68.1	50.2	–8.06	18.13
–9	1690	187	68.2	68.1	49.9	–9.04	19.12
–10	1870	187	68.2	68.1	49.9	–10	20
–11	2050	187	68.2	68.1	49.9	–10.96	20.80
–12	2210	182	68.9	68.1	49.6	–12.14	21.69
–13	2370	182	68.9	68.1	49.6	–13.02	22.29
–14	2550	182	68.9	68.1	49.6	–14.01	22.93
–15	2740	182	68.9	68.1	49.6	–15.05	23.55
–16	2870	178	69.5	69.8	50.1	–16.12	24.15
–17	3090	182	68.9	69.8	50.5	–16.98	24.6
–18	3240	178	69.5	69.8	50.1	–18.20	25.2
–19	3400	178	69.5	69.8	50.1	–19.10	25.62
–20	3570	178	69.5	69.8	50.1	–20.06	26.04

9.1.3 Output DC Error Calculations

The OPA838 can provide excellent DC signal accuracy due to high open-loop gain, high common-mode rejection, high power-supply rejection, and low input offset voltage and bias current offset errors. To take full advantage of this low input offset voltage, pay careful attention to input bias current cancellation. The low-noise input stage for the OPA838 has a relatively high input bias current (1.6 µA typical out the pins) but with a close match between the two input currents. This is a negative rail input device using PNP input devices where the base current flows out of the device pins. A large resistor to ground on the V+ input shifts positively because of the input bias current. The mismatch between the two input bias currents is very low, typically only ±20 nA of input offset current. Match the DC source impedances out of the two inputs to reduce the total output offset voltage. For example, one way to add bias current cancellation to the circuit in 图 68 is to insert a 165-Ω series resistor into the noninverting input to match the parallel combination of R_F and R_G for this basic gain of 6 V/V

版权 © 2017–2018, Texas Instruments Incorporated

noninverting gain circuit. These same calculations apply to the output offset drift. Analyzing the simple circuit of 图 68, the noise gain for the input offset voltage drift is 1 + 1k / 200 = 6 V/V. This results in an output drift term of ±1.6 µV/°C × 6 = ±9.6 µV/°C. Because the two impedances out of the inputs are matched, the residual error due to the maximum ±500 pA/°C offset current drift is exactly that number times the 1-kΩ feedback resistor value, or ±50 µV/°C. The total output DC error drift band is ±59 µV/°C.

9.1.4 Output Noise Calculations

The decompensated voltage feedback of the OPA838 op amp offers among the lowest input voltage and current noise terms for any device with a supply current less than 1 mA. 图 76 shows the op amp noise analysis model that includes all noise terms. In this model, all the noise terms are shown as noise voltage or current density terms in nV/√Hz or pA/√Hz.

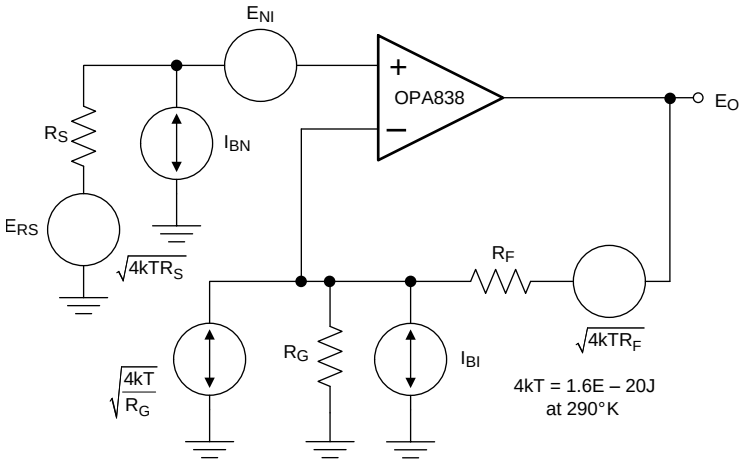

图 76. Op Amp Noise Analysis Model

The total output spot noise voltage is computed as the square root of the squared contributing terms to the output noise voltage. This computation is adding all the contributing noise powers at the output by superposition, then taking the square root to return to a spot noise voltage. 公式 3 shows the general form for this output noise voltage using the terms presented in 图 76.

$$E_O = \sqrt{\left[E_{NI}^2 + \left(I_{BN}R_S\right) + 4kTR_S\right]NG^2 + \left(I_{BI}R_F\right)^2 + 4kTR_FNG} \quad (3)$$

Dividing this expression by the noise gain (NG = 1 + R_F / R_G) gives the equivalent input referred spot noise voltage at the noninverting input, as shown in 公式 4.

$$E_N = \sqrt{E_{NI}^2 + \left(I_{BN}R_S\right)^2 + 4kTR_S + \left(\frac{I_{BI}R_F}{NG}\right)^2 + \frac{4kTR_F}{NG}} \quad (4)$$

Using the resistor values shown in 表 1 with R_S = 0 Ω results in a constant input referred voltage noise of 2.86nV / √Hz. Reducing the resistor values brings this number closer to the intrinsic 1.9 nV / √Hz of the OPA838. Adding R_S for bias current cancellation in noninverting mode adds the noise from R_S to the total output noise, as shown in 公式 3. In inverting mode, the R_S bias current cancellation resistor must be bypassed with a capacitor for the best noise performance.

9.1.5 High-Gain Differential I/O Designs

A high-gain differential-to-differential I/O circuit can be used to drive a second-stage FDA or a differential-to-single-ended stage. This circuit is frequently used in applications where high input impedance is required (for example, if the source cannot be loaded). 图 76 illustrates an example design where the differential gain is 41 V/V. An added element between the two R_G resistors increases the noise gain for the common-mode feedback. It is important to provision for the added element because a decompensated VFA (like the OPA838) often oscillates without it in this circuit. With only the R_G elements in the differential I/O design, the common-mode feedback is unity-gain and often causes high-frequency, common-mode oscillations. To resolve this issue, split the R_G elements in half and add a low-impedance path such as a capacitor or a DC reference between the two R_G values.

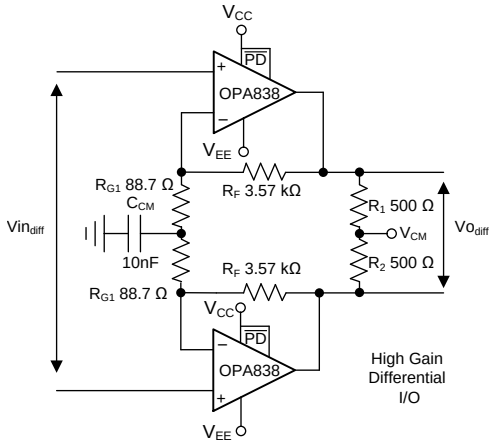

图 77. High-Gain Differential I/O Stage

Integrated results are available, but the OPA838 device provides a low-power, high-frequency result. For best CMRR performance, resistors must be matched. A good rule is CMRR ≈ the resistor tolerance; so 0.1% tolerance provides approximately 60-dB CMRR.

9.1.5.1 Differential I/O Design Requirements

As an example design, start with the circuit in 图 77.

- Set the target gain and split the R_G element in half. For this example, target a gain of 41 V/V.
- Assess the DC common-mode biasing on the noninverting inputs. The DC biasing must be in range and have a gain of 1 to the output. This is not illustrated in 图 76.
- If a DC reference is used as the mid-R_G bias, setting the reference equal to the noninverting input bias voltage sets the output common-mode to that voltage. Using a capacitor as illustrated in 图 76 accomplishes the same results.

9.1.5.2 Detailed Design Procedure

- Set the total R_G value near the high gain values using 表 1. This 178-Ω total must be split for a center tap to increase the common-mode noise gain, as shown by the 88.7-Ω value in 图 77.
- Set R_F using a standard value near the calculated from solving 公式 1 using half of the total R_G value.

版权 © 2017–2018, Texas Instruments Incorporated

- Simulate the common-mode noise with different elements on the R_G center tap, as shown in 图 78. Decide which is most appropriate to the application.

The common-mode loop instability without the R_G center tap is not often apparent in the closed-loop differential simulations. It can often be detected in a common-mode output noise simulation as 图 78 shows. Grounding the inputs 图 77 and running a output noise simulation for the common-mode tap point in 图 76 shows a peaking in the noise at high frequency. This peaking indicates low-phase margin for the common-mode loop. 图 78 shows this peaking in the lowest noise curve, with two options for improving phase margin. The first option used in 图 77 is a capacitor to ground set to increase the common-mode noise gain only at higher frequencies. This can be seen by the peaking in the common-mode noise of 图 78. Another alternative is to provide a DC voltage reference on the R_G center tap. This raises the common-mode noise gain from DC on up in frequency. Neither of these latter two show any evidence of low phase margin peaking. They do increase the output common-mode noise significantly at lower frequencies. Typically, an increase in output common-mode noise is more acceptable than low-phase margin as the next stage (FDA, ADC, differential to single stage) rejects common-mode noise.

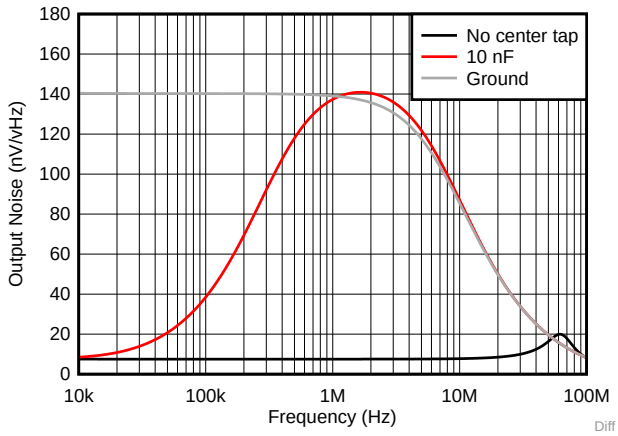

图 78. Common-Mode Output Noise for Differential I/O Design

Using the 10-nF center tap capacitor, 图 79 shows the differential I/O small-signal response showing the expected 300 MHz / 41 ≈ 7.3 MHz closed-loop bandwidth. The capacitor to ground between the R_G elements does not impact the differential frequency response.

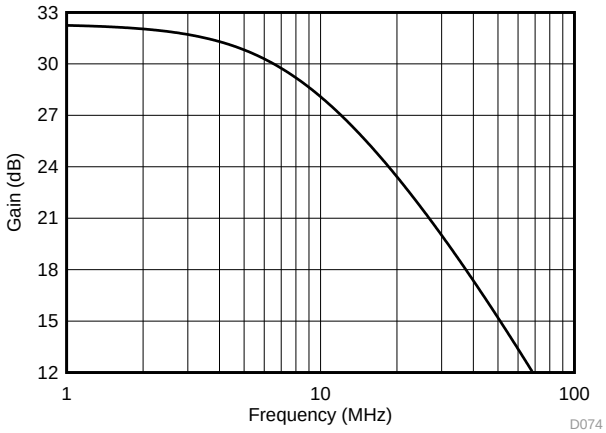

图 79. Differential Small-Signal Frequency Response

9.1.6 Transimpedance Amplifiers

A common application for a high gain bandwidth voltage feedback op amp is to amplify a small photo-diode current from a capacitive detector. Figure 80 shows the front page transimpedance circuit with more detail. Here, a fixed –0.23 negative voltage generator (LM7705) is used on the negative supply to ensure the output has adequate headroom when it is at 0 V. The transimpedance stage is designed here for a 2.4Mhz flat (Butterworth) response while a simple RC post-filter band-limits the broadband noise and sets the overall bandwidth to 1MHz.

The requirements for a high dynamic range transimpedance (or charge) amplifier include the very low input voltage noise intrinsic to a decompensated device like the OPA838. The noise gain over frequency for this type of circuit starts out at unity gain then begins to peak with a single zero response due to the pole formed in the feedback by the feedback resistor and the total capacitance on the inverting input. That noise gain response is flattened out at higher frequencies by the feedback capacitor value to be the 1 + C_S/C_F capacitor ratio. This is normally a very high noise gain allowing the decompensated OPA838 to be applied to this application. Since the noise gain is intentionally peaked to a high value in this application, the very low input voltage noise (1.8 nV/$\sqrt{Hz}$) of the OPA838 improves dynamic range.

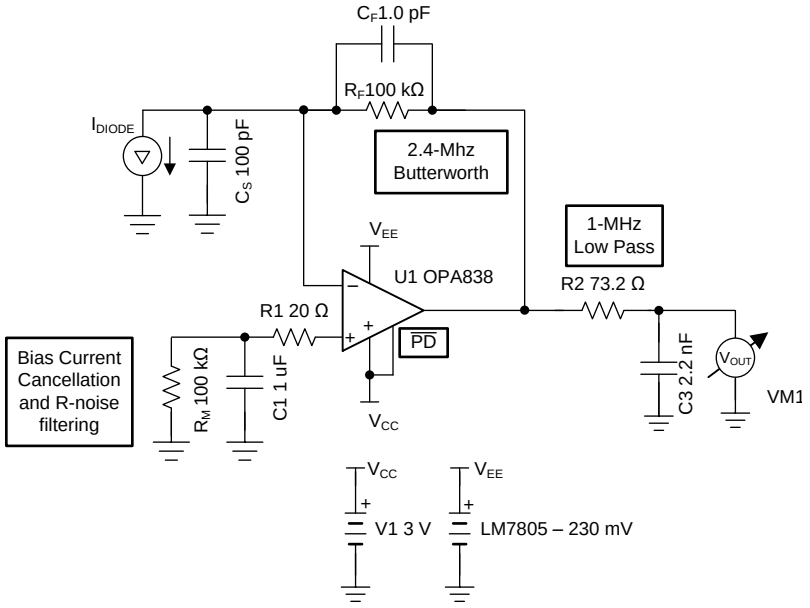

图 80. 100-kΩ Wide Bandwidth Transimpedance Design

版权 © 2017–2018, Texas Instruments Incorporated

9.1.7 Design Requirements

To implement a controlled frequency response transimpedance design, set the transimpedance stage amplifier bandwidth higher than a controlled post RC filter. This allows variation in the source capacitance and amplifier gain bandwidth product with less overall bandwidth variation to the final output. In this example design:

- Assume a nominal source capacitance value of 100 pF. This normally comes from the capacitance versus reverse bias plot for the photodiode. No reverse bias is illustrated in 图 81, but the current source is typically a back biased diode with a negative supply on the anode and the cathode connected to the op amp inverting input. In this polarity, the signal current sinks into the diode and raises the op amp output voltage above ground.
- For the best DC precision, add a matching resistor on the noninverting input to reduce the input bias current error to $I_{OS} \times R_F$. This resistor adds to the input voltage noise; TI recommends bypassing that resistor with as large as a capacitor as required to roll off resistor noise. This capacitor has a relatively low frequency self resonance that interacts with the input stage and might impair stability. Add a small series 20-Ω resistor from the capacitor into the noninverting input to de-Q the resonant source impedance without adding too much noise.
- Set the feedback capacitor to achieve the desired frequency response shape.
- Add a post RC filter to control the overall bandwidth to 1 MHz. In this example, a 2.2-nF capacitor allows a low 73.2-Ω series resistor. When driving a sampling ADC (like a SAR), this combination helps reduce the sampling glitch and speed settling time.

9.1.7.1 Detailed Design Procedure

The primary design requirement is to set the achievable transimpedance gain and compensate the operational amplifier with C_F for the desired response shape. A detailed transimpedance design methodology is available in *Transimpedance Considerations for High-Speed Amplifiers.* With a source capacitance set and the amplifier selected to provide a particular gain bandwidth product, the achievable transimpedance gain and resulting Butterworth bandwidth are tightly coupled as 公式 5 illustrates. Use 公式 6 to solve for a maximum R_F value. When the R_F is selected, the feedback pole is set by 公式 7 to be at .707 of the characteristic frequency. At that compensation point, the closed-loop bandwidth is that characteristic frequency with a Butterworth response.

- With the 100-pF source capacitance, 300-MHz gain bandwidth product, and the 2.2-MHz closed-loop bandwidth target in the transimpedance stage, solve 公式 6 for a maximum gain of 100 kΩ.
- Set the feedback pole at 0.707 times that 2.2-MHz Butterworth bandwidth. This sets the target $1 / (2\pi \times R_F \times C_F) = 1.55$ MHz. Solving for C_F sets the target to 1 pF
- If DC precision is desired, add a 100-kΩ resistor to ground on the noninverting input. If DC precision is not required, ground the noninverting input
- Add a resistor noise filtering capacitor in parallel with the 100-kΩ resistor.
- Add a small series resistor isolating this capacitor from the noninverting input.
- Select a final filter capacitor for the load. (In this example, a value of 2.2 nF is used as a typical SAR input capacitor.)
- Add a series resistor to the final filter capacitor to form a 1-MHz pole. In this example, that is 73.2 Ω.
- Confirm this resistor is greater than the minimum recommended value illustrated in 图 49.

$$F_{-3dB} \approx \sqrt{\frac{GBP}{2\pi R_f C_S}} \tag{5}$$

$$R_{f\,max} \approx \frac{GBP}{F_{-3dB}^2 2\pi C_S} \tag{6}$$

$$\frac{1}{2\pi R_f C_f} = 0.707 \times \sqrt{\frac{GBP}{2\pi R_f C_S}} \tag{7}$$

Implementing this design and simulating the performance using the TINA model for the response to the output pin and to the final capacitive load shows the expected results of 图 81. Here the exact 2.2-MHz flat Butterworth response to the output pin is shown with the final single pole rolloff at 1 MHz at the final 2.2-nF capacitor.

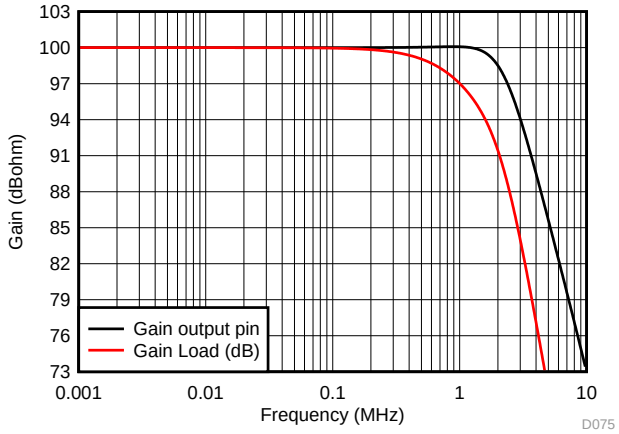

图 81. Small-Signal Response for 100-kΩ Transimpedance Gain

10 Power Supply Recommendations

The OPA838 device is intended to work in a supply range of 2.7 V to 5.4 V. Good power-supply bypassing is required. Minimize the distance (less than 0.1 inch) from the power-supply pins to high-frequency, 0.1-µF decoupling capacitors. A larger capacitor (2.2 µF is typical) is used with a high-frequency, 0.1-µF supply-decoupling capacitor at the device supply pins. For single-supply operation, only the positive supply has these capacitors. When a split-supply is used, use these capacitors for each supply to ground. If necessary, place the larger capacitors further from the device and share these capacitors among several devices in the same area of the PCB. Avoid narrow power and ground traces to minimize inductance between the pins and the decoupling capacitors. An optional 0.1-µF supply decoupling capacitor across the two power supplies (for bipolar operation) reduces second harmonic distortion.

The OPA838 has a positive supply current temperature coefficient; see 图 57. This helps improve the input offset voltage drift. Supply current requirements in system design must account for this effect using the maximum intended ambient and 图 57 to size the supply required. The very low power dissipation for the OPA838 typically does not require any special thermal design considerations. For the extreme case of 125°C operating ambient, use the approximate maximum 200°C/W for the three packages, and a maximum internal power of 5.4-V supply × 1.25-mA 125°C supply current from 图 57 gives a maximum internal power of 6.75 mW. This only gives a 1.35°C rise from ambient to junction temperature which is well below the maximum 150°C junction temperature. Load power adds to this, but also increases the junction temperature only slightly over ambient temperature.

版权 © 2017–2018, Texas Instruments Incorporated

11 Layout

11.1 Layout Guidelines

The *OPA838 EVM* can be used as a reference when designing the circuit board. TI recommends following the EVM layout of the external components near to the amplifier, ground plane construction, and power routing as closely as possible. General guidelines are listed below:

1. Signal routing must be direct and as short as possible into and out of the op amp.
2. The feedback path must be short and direct avoiding vias if possible.
3. Ground or power planes must be removed from directly under the negative input and output pins of the amplifier.
4. TI recommends placing a series output resistor as close to the output pin as possible when driving capacitive or matched loads.
5. A 2.2-µF power-supply decoupling capacitor must be placed within two inches of the device and can be shared with other op amps. For split-supply operation, a capacitor is required for both supplies.
6. A 0.1-µF power-supply decoupling capacitor must be placed as close to the supply pins as possible, preferably within 0.1 inch. For split-supply operation, a capacitor is required for both supplies.
7. The $\overline{PD}$ pin uses logic levels referenced off the negative supply. If the pin is not used, the pin must tie to the positive supply to enable the amplifier. If the pin is used, the pin must be actively driven. A bypass capacitor is not necessary, but is used for EMI rejection in noisy environments.

11.2 Layout Example

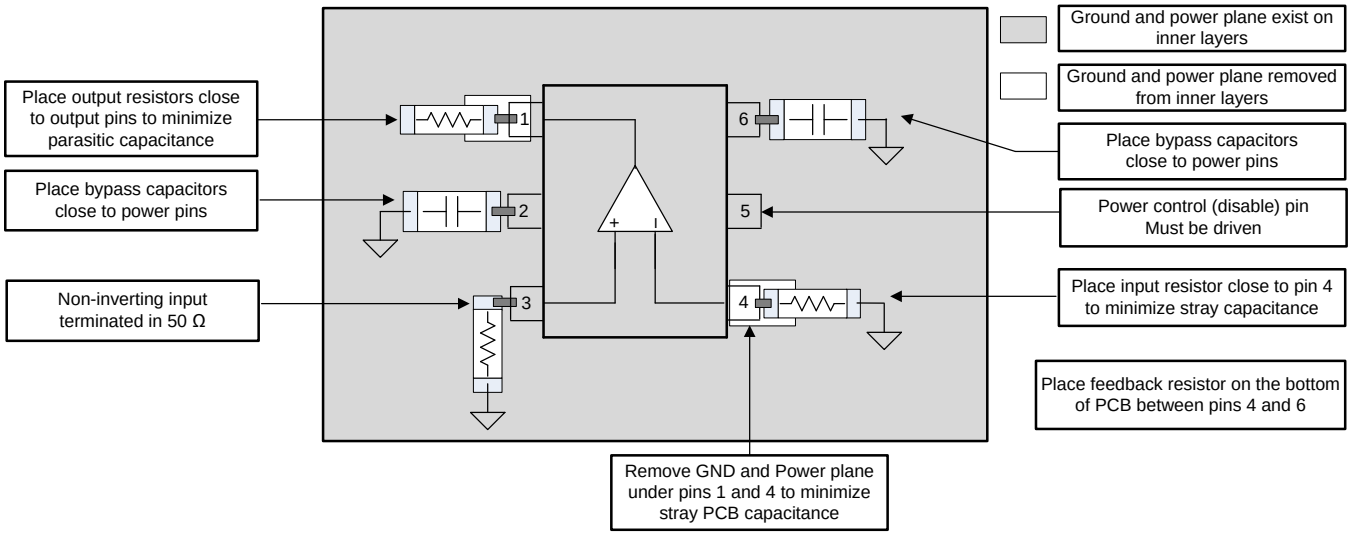

图 82. EVM Layout Example

12 器件和文档支持

12.1 器件支持

12.1.1 器件支持

12.1.1.1 TINA-TI™仿真模型 特性

您可以从 www.ti.com 产品文件夹内的典型应用电路文件中获取器件模型。此模型包含多种 功能， 旨在帮助设计人员加快设计过程，从而满足各类应用需求。下面列出了模型中所包含的性能参数：

- 采用任意外部电路时的小信号响应波形：
  - 差分开环增益和相位
  - 寄生输入电容
  - 开环差分输出阻抗
- 对于噪声仿真：
  - 输入差分点电压噪声和 100Hz 1/f 转角频率
  - 每个输入端上的输入电流噪声与 6kHz 1/f 转角频率
- 对于时域阶跃响应仿真：
  - 差分转换率
  - 用于预测削波的 I/O 余量模型
  - 用于预测过驱限制的输入级二极管
- 精密的直流精度术语
  - 电源抑制比 (PSRR)
  - 共模抑制比 (CMRR)
  - 标称输入失调电压
  - 标称输入偏移电流
  - 标称输入偏置电流

典型特性 表提供了比宏模型所能提供的更多细节。其中一些未建模的 特性 包括：

- 谐波失真
- 直流误差中的温度漂移（V_{IO} 和 I_{OS}）
- 过驱恢复时间
- 使用断电特性时的导通和关断时间

12.2 文档支持

12.2.1 相关文档

请参阅如下相关文档：

德州仪器 (TI)，*OPA835DBV、OPA836DBV EVM用户指南*

12.2.2 接收文档更新通知

要接收文档更新通知，请导航至 TI.com.cn 上的器件产品文件夹。单击右上角的*通知我*进行注册，即可每周接收产品信息更改摘要。有关更改的详细信息，请查看任何已修订文档中包含的修订历史记录。

版权 © 2017–2018, Texas Instruments Incorporated

文档支持 (接下页)

12.2.3 社区资源

下列链接提供到 TI 社区资源的连接。链接的内容由各个分销商“按照原样”提供。这些内容并不构成 TI 技术规范，并且不一定反映 TI 的观点；请参阅 TI 的 《使用条款》。

TI E2E™ 在线社区 ***TI 的工程师对工程师 (E2E) 社区。*** 此社区的创建目的在于促进工程师之间的协作。在 e2e.ti.com 中，您可以咨询问题、分享知识、拓展思路并与同行工程师一道帮助解决问题。

设计支持 ***TI 参考设计支持*** 可帮助您快速查找有帮助的 E2E 论坛、设计支持工具以及技术支持的联系信息。

12.3 商标

TINA-TI, E2E are trademarks of Texas Instruments.
All other trademarks are the property of their respective owners.

12.4 静电放电警告



这些装置包含有限的内置 ESD 保护。 存储或装卸时，应将导线一起截短或将装置放置于导电泡棉中，以防止 MOS 门极遭受静电损伤。

12.5 术语表

SLYZ022 — *TI 术语表*。

这份术语表列出并解释术语、缩写和定义。

13 机械、封装和可订购信息

以下页面包含机械、封装和可订购信息。这些信息是指定器件的最新可用数据。数据如有变更，恕不另行通知，且不会对此文档进行修订。如需获取此数据表的浏览器版本，请查阅左侧的导航栏。

版权 © 2017–2018, Texas Instruments Incorporated

重要声明和免责声明

TI 均以“原样”提供技术性及可靠性数据（包括数据表）、设计资源（包括参考设计）、应用或其他设计建议、网络工具、安全信息和其他资源，不保证其中不含任何瑕疵，且不做任何明示或暗示的担保，包括但不限于对适销性、适合某特定用途或不侵犯任何第三方知识产权的暗示担保。

所述资源可供专业开发人员应用TI 产品进行设计使用。您将对以下行为独自承担全部责任：(1) 针对您的应用选择合适的TI 产品；(2) 设计、验证并测试您的应用；(3) 确保您的应用满足相应标准以及任何其他安全、安保或其他要求。所述资源如有变更，恕不另行通知。TI 对您使用所述资源的授权仅限于开发资源所涉及TI 产品的相关应用。除此之外不得复制或展示所述资源，也不提供其它TI或任何第三方的知识产权授权许可。如因使用所述资源而产生任何索赔、赔偿、成本、损失及债务等，TI对此概不负责，并且您须赔偿由此对TI 及其代表造成的损害。

TI 所提供产品均受TI 的销售条款 (http://www.ti.com.cn/zh-cn/legal/termsofsale.html) 以及ti.com.cn上或随附TI产品提供的其他可适用条款的约束。TI提供所述资源并不扩展或以其他方式更改TI 针对TI 产品所发布的可适用的担保范围或担保免责声明。

邮寄地址：上海市浦东新区世纪大道 1568 号中建大厦 32 楼，邮政编码：200122
Copyright © 2018 德州仪器半导体技术（上海）有限公司

PACKAGING INFORMATION

Orderable Device	Status (1)	Package Type	Package Drawing	Pins	Package Qty	Eco Plan (2)	Lead/Ball Finish (6)	MSL Peak Temp (3)	Op Temp (°C)	Device Marking (4/5)	Samples
OPA838IDBVR	ACTIVE	SOT-23	DBV	6	3000	Green (RoHS & no Sb/Br)	CU NIPDAU	Level-2-260C-1 YEAR	-40 to 125	1C3F	Samples
OPA838IDBVT	ACTIVE	SOT-23	DBV	6	250	Green (RoHS & no Sb/Br)	CU NIPDAU	Level-2-260C-1 YEAR	-40 to 125	1C3F	Samples
OPA838IDCKR	ACTIVE	SC70	DCK	5	3000	Green (RoHS & no Sb/Br)	CU NIPDAU	Level-2-260C-1 YEAR	-40 to 125	17Q	Samples
OPA838IDCKT	ACTIVE	SC70	DCK	5	250	Green (RoHS & no Sb/Br)	CU NIPDAU	Level-2-260C-1 YEAR	-40 to 125	17Q	Samples
OPA838SIDCKR	ACTIVE	SC70	DCK	6	3000	Green (RoHS & no Sb/Br)	CU NIPDAU	Level-2-260C-1 YEAR	-40 to 125	19C	Samples
OPA838SIDCKT	ACTIVE	SC70	DCK	6	250	Green (RoHS & no Sb/Br)	CU NIPDAU	Level-2-260C-1 YEAR	-40 to 125	19C	Samples

(1) The marketing status values are defined as follows:
ACTIVE: Product device recommended for new designs.
LIFEBUY: TI has announced that the device will be discontinued, and a lifetime-buy period is in effect.
NRND: Not recommended for new designs. Device is in production to support existing customers, but TI does not recommend using this part in a new design.
PREVIEW: Device has been announced but is not in production. Samples may or may not be available.
OBSOLETE: TI has discontinued the production of the device.

(2) **RoHS:** TI defines "RoHS" to mean semiconductor products that are compliant with the current EU RoHS requirements for all 10 RoHS substances, including the requirement that RoHS substance do not exceed 0.1% by weight in homogeneous materials. Where designed to be soldered at high temperatures, "RoHS" products are suitable for use in specified lead-free processes. TI may reference these types of products as "Pb-Free".
RoHS Exempt: TI defines "RoHS Exempt" to mean products that contain lead but are compliant with EU RoHS pursuant to a specific EU RoHS exemption.
Green: TI defines "Green" to mean the content of Chlorine (Cl) and Bromine (Br) based flame retardants meet JS709B low halogen requirements of <=1000ppm threshold. Antimony trioxide based flame retardants must also meet the <=1000ppm threshold requirement.

(3) MSL, Peak Temp. - The Moisture Sensitivity Level rating according to the JEDEC industry standard classifications, and peak solder temperature.

(4) There may be additional marking, which relates to the logo, the lot trace code information, or the environmental category on the device.

(5) Multiple Device Markings will be inside parentheses. Only one Device Marking contained in parentheses and separated by a "~" will appear on a device. If a line is indented then it is a continuation of the previous line and the two combined represent the entire Device Marking for that device.

(6) Lead/Ball Finish - Orderable Devices may have multiple material finish options. Finish options are separated by a vertical ruled line. Lead/Ball Finish values may wrap to two lines if the finish value exceeds the maximum column width.

Important Information and Disclaimer: The information provided on this page represents TI's knowledge and belief as of the date that it is provided. TI bases its knowledge and belief on information provided by third parties, and makes no representation or warranty as to the accuracy of such information. Efforts are underway to better integrate information from third parties. TI has taken and continues to take reasonable steps to provide representative and accurate information but may not have conducted destructive testing or chemical analysis on incoming materials and chemicals. TI and TI suppliers consider certain information to be proprietary, and thus CAS numbers and other limited information may not be available for release.

In no event shall TI's liability arising out of such information exceed the total purchase price of the TI part(s) at issue in this document sold by TI to Customer on an annual basis.

TAPE AND REEL INFORMATION

REEL DIMENSIONS

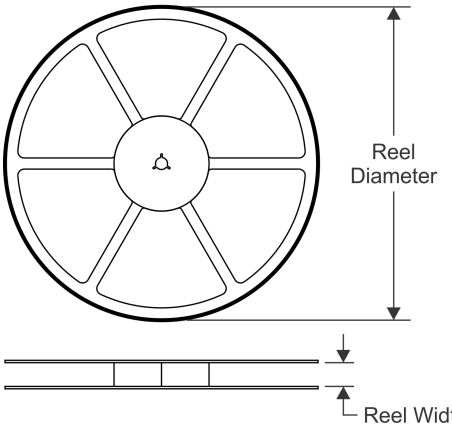

TAPE DIMENSIONS

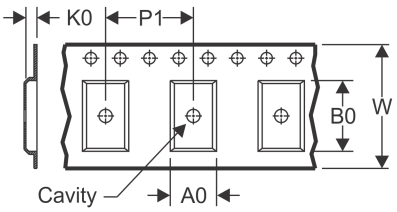

A0	Dimension designed to accommodate the component width
B0	Dimension designed to accommodate the component length
K0	Dimension designed to accommodate the component thickness
W	Overall width of the carrier tape
P1	Pitch between successive cavity centers

QUADRANT ASSIGNMENTS FOR PIN 1 ORIENTATION IN TAPE

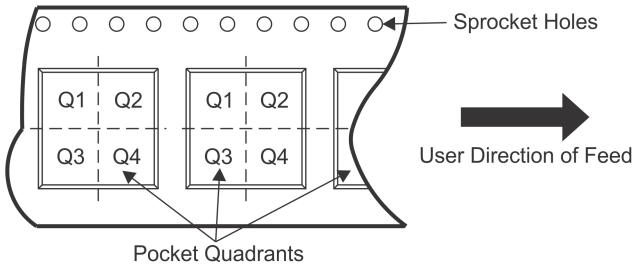

*All dimensions are nominal

Device	Package Type	Package Drawing	Pins	SPQ	Reel Diameter (mm)	Reel Width W1 (mm)	A0 (mm)	B0 (mm)	K0 (mm)	P1 (mm)	W (mm)	Pin1 Quadrant
OPA838IDBVR	SOT-23	DBV	6	3000	178.0	9.0	3.23	3.17	1.37	4.0	8.0	Q3
OPA838IDBVT	SOT-23	DBV	6	250	178.0	9.0	3.23	3.17	1.37	4.0	8.0	Q3
OPA838IDCKR	SC70	DCK	5	3000	178.0	9.0	2.4	2.5	1.2	4.0	8.0	Q3
OPA838IDCKT	SC70	DCK	5	250	178.0	9.0	2.4	2.5	1.2	4.0	8.0	Q3
OPA838SIDCKR	SC70	DCK	6	3000	178.0	9.0	2.4	2.5	1.2	4.0	8.0	Q3
OPA838SIDCKT	SC70	DCK	6	250	178.0	9.0	2.4	2.5	1.2	4.0	8.0	Q3

TAPE AND REEL BOX DIMENSIONS

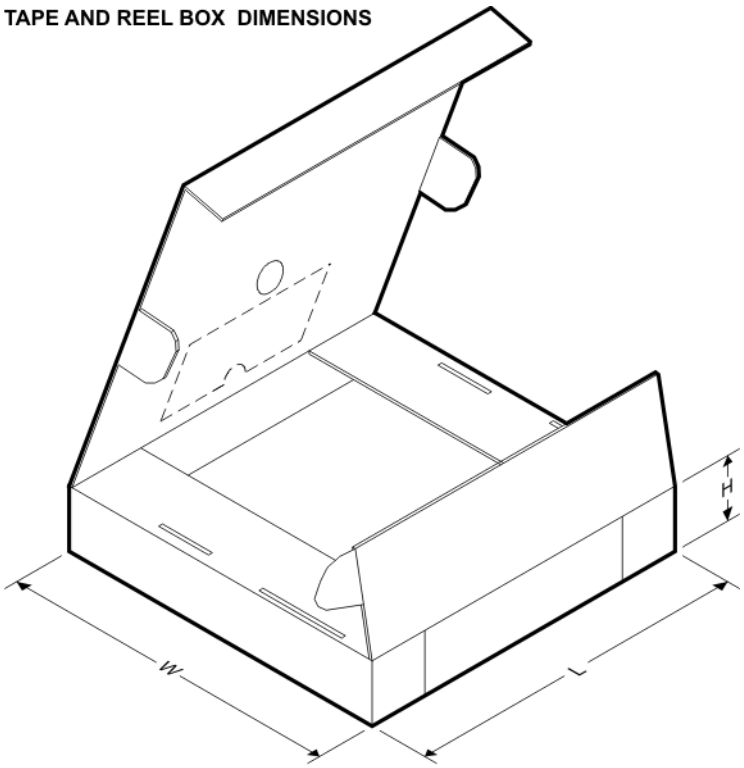

*All dimensions are nominal

Device	Package Type	Package Drawing	Pins	SPQ	Length (mm)	Width (mm)	Height (mm)
OPA838IDBVR	SOT-23	DBV	6	3000	180.0	180.0	18.0
OPA838IDBVT	SOT-23	DBV	6	250	180.0	180.0	18.0
OPA838IDCKR	SC70	DCK	5	3000	180.0	180.0	18.0
OPA838IDCKT	SC70	DCK	5	250	180.0	180.0	18.0
OPA838SIDCKR	SC70	DCK	6	3000	180.0	180.0	18.0
OPA838SIDCKT	SC70	DCK	6	250	180.0	180.0	18.0

DCK (R–PDSO–G5) PLASTIC SMALL–OUTLINE PACKAGE

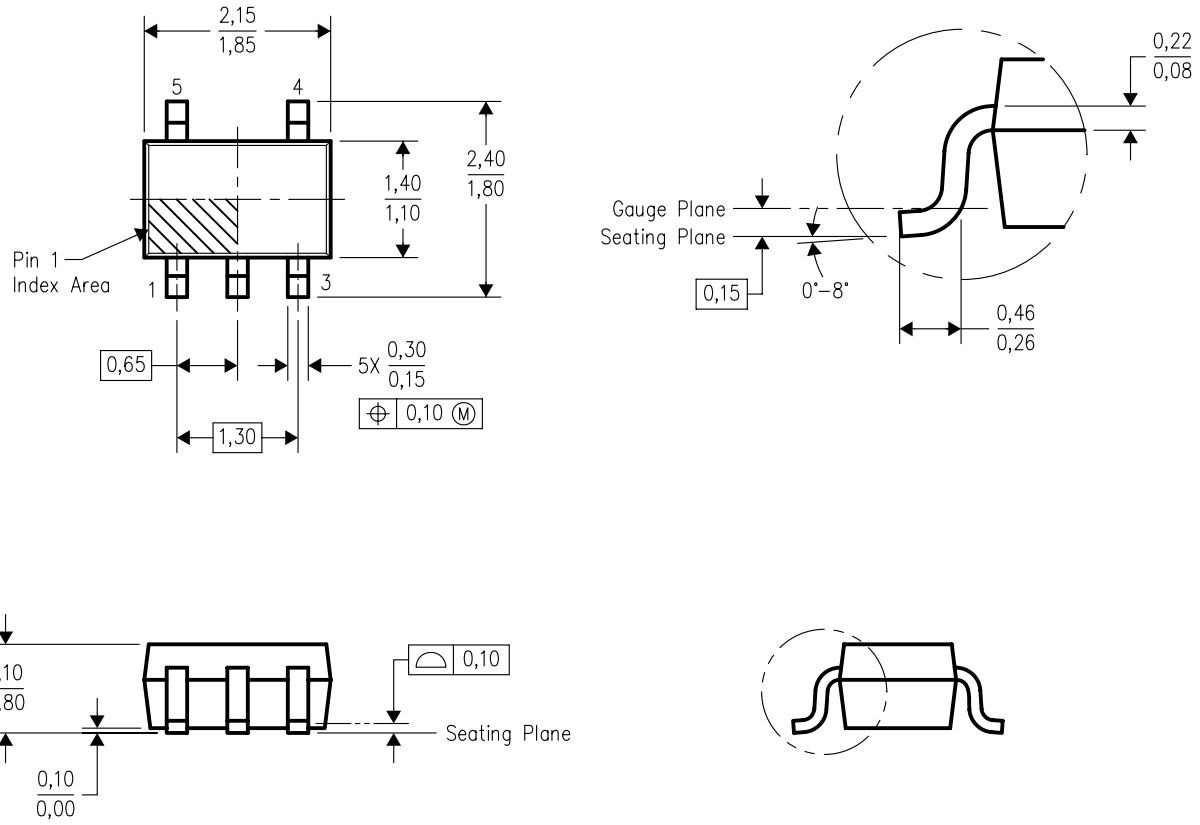

4093553–3/G 01/2007

NOTES:
A. All linear dimensions are in millimeters.
B. This drawing is subject to change without notice.
C. Body dimensions do not include mold flash or protrusion. Mold flash and protrusion shall not exceed 0.15 per side.
D. Falls within JEDEC MO–203 variation AA.

DCK (R–PDSO–G5) PLASTIC SMALL OUTLINE

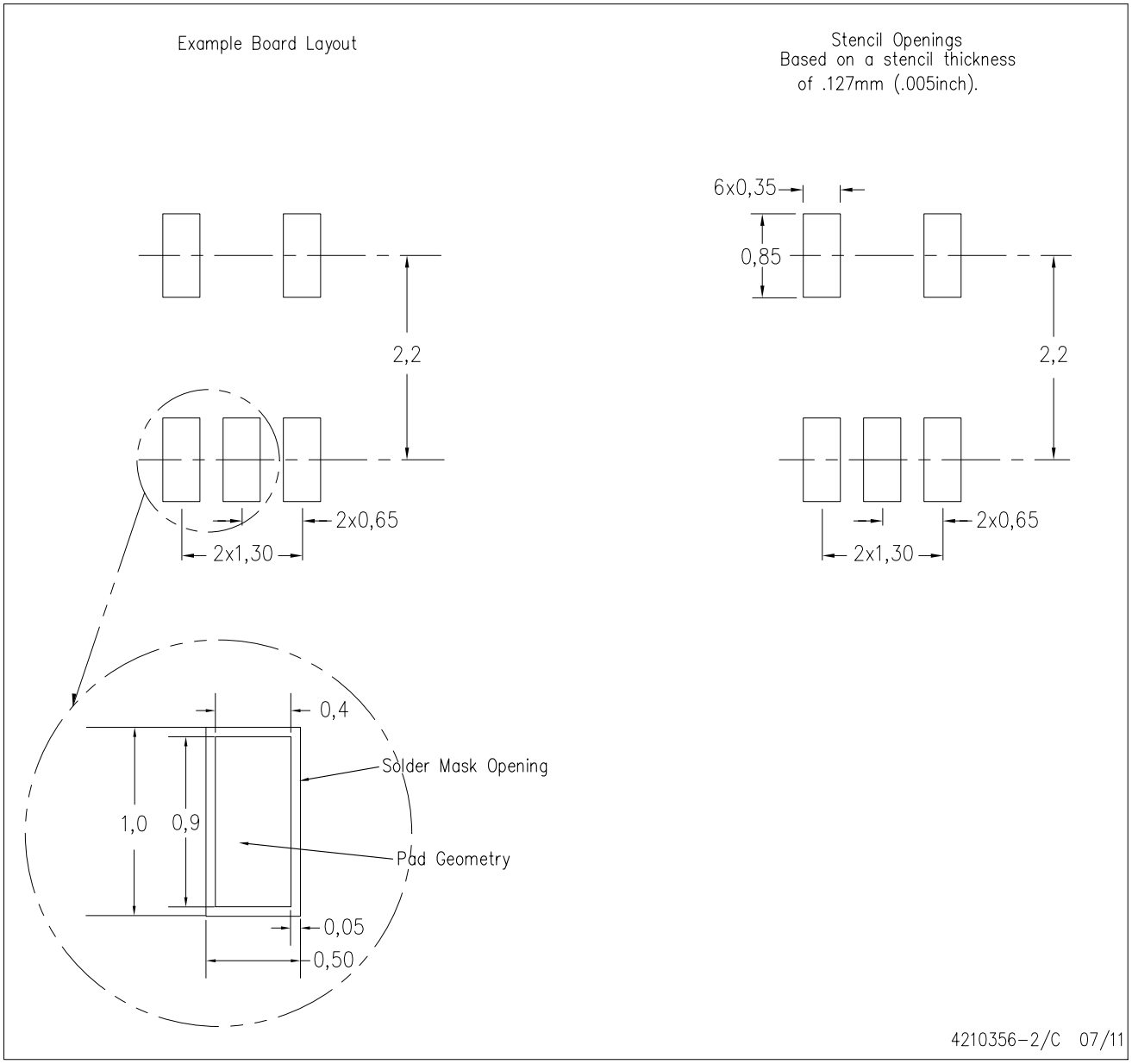

NOTES:
A. All linear dimensions are in millimeters.
B. This drawing is subject to change without notice.
C. Customers should place a note on the circuit board fabrication drawing not to alter the center solder mask defined pad.
D. Publication IPC–7351 is recommended for alternate designs.
E. Laser cutting apertures with trapezoidal walls and also rounding corners will offer better paste release. Customers should contact their board assembly site for stencil design recommendations. Example stencil design based on a 50% volumetric metal load solder paste. Refer to IPC–7525 for other stencil recommendations.

PACKAGE OUTLINE

DBV0006A

SOT-23 - 1.45 mm max height

SMALL OUTLINE TRANSISTOR

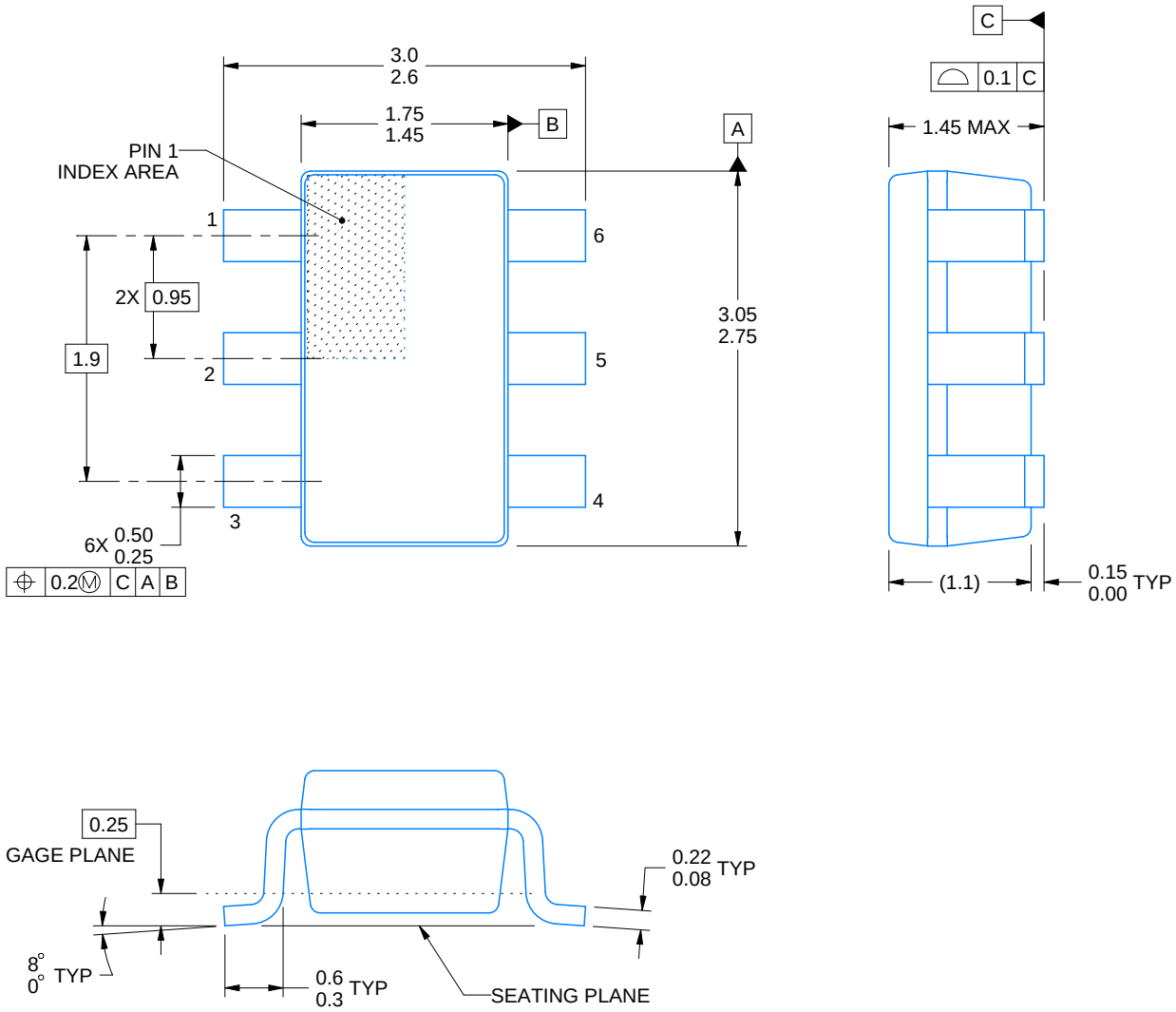

4214840/B 03/2018

NOTES:

1. All linear dimensions are in millimeters. Any dimensions in parenthesis are for reference only. Dimensioning and tolerancing per ASME Y14.5M.
2. This drawing is subject to change without notice.
3. Body dimensions do not include mold flash or protrusion. Mold flash and protrusion shall not exceed 0.15 per side.
4. Leads 1,2,3 may be wider than leads 4,5,6 for package orientation.
5. Refernce JEDEC MO-178.

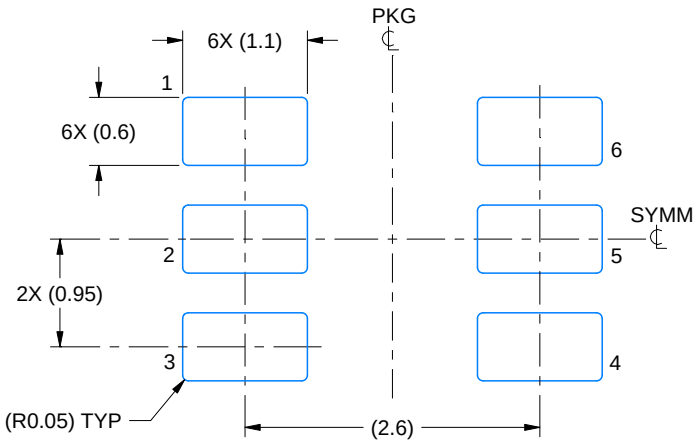

LAND PATTERN EXAMPLE
EXPOSED METAL SHOWN
SCALE:15X

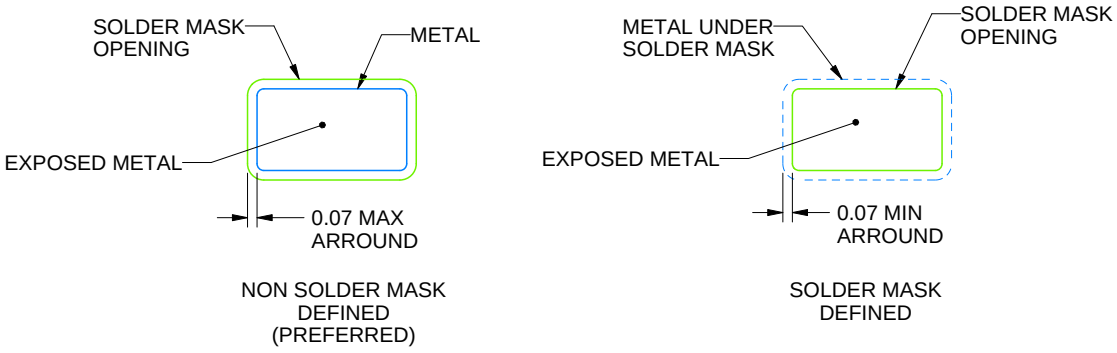

SOLDER MASK DETAILS

4214840/B 03/2018

NOTES: (continued)

6. Publication IPC-7351 may have alternate designs.
7. Solder mask tolerances between and around signal pads can vary based on board fabrication site.

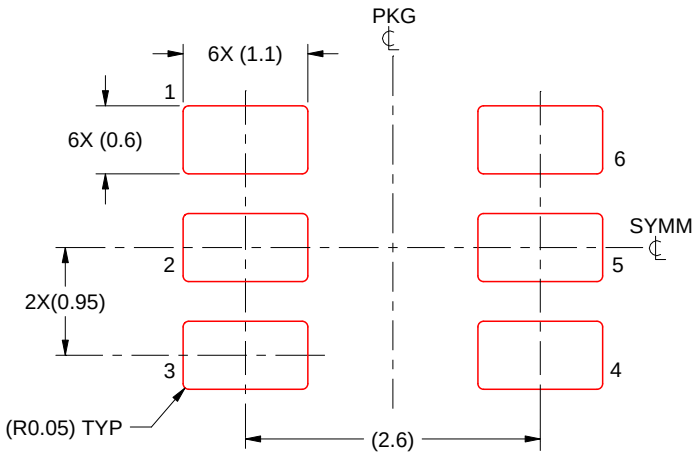

SOLDER PASTE EXAMPLE
BASED ON 0.125 mm THICK STENCIL
SCALE:15X

4214840/B 03/2018

NOTES: (continued)

8. Laser cutting apertures with trapezoidal walls and rounded corners may offer better paste release. IPC-7525 may have alternate design recommendations.
9. Board assembly site may have different recommendations for stencil design.

DCK (R–PDSO–G6) PLASTIC SMALL–OUTLINE PACKAGE

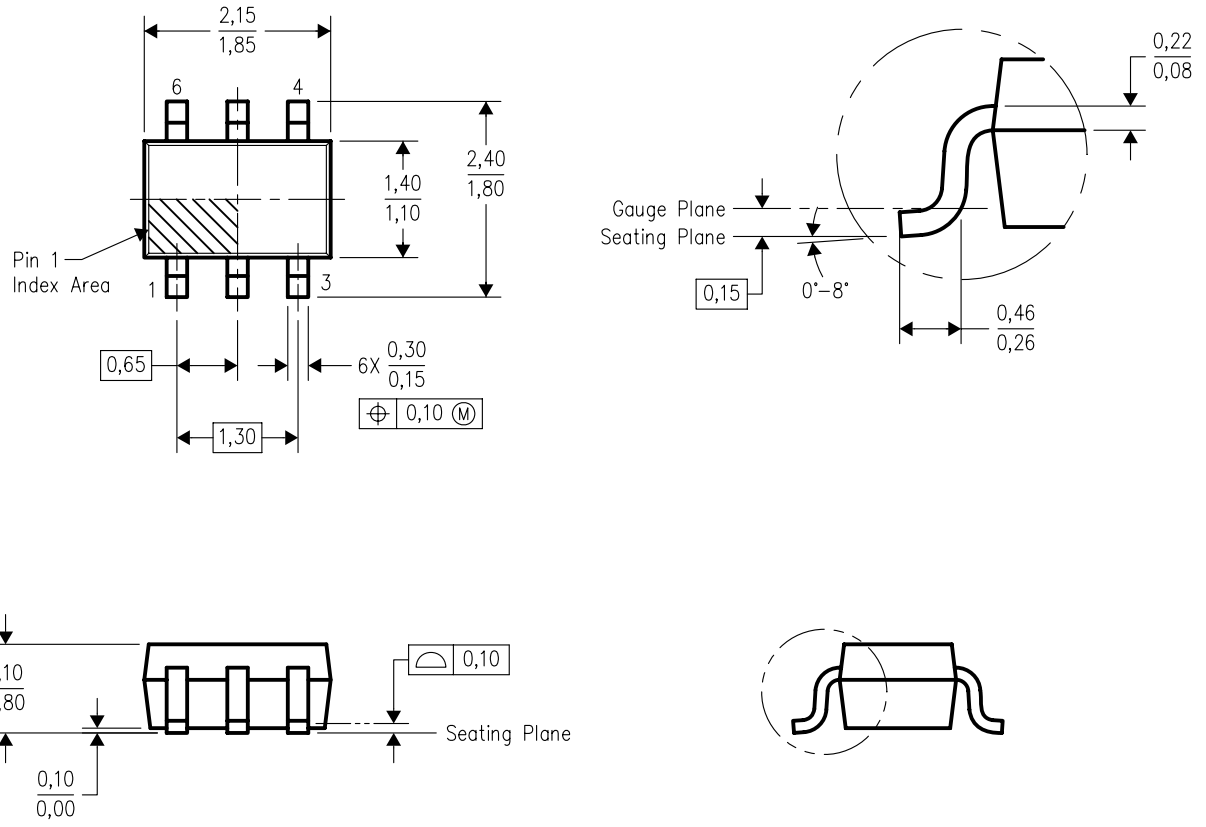

4093553–4/G 01/2007

NOTES:
A. All linear dimensions are in millimeters.
B. This drawing is subject to change without notice.
C. Body dimensions do not include mold flash or protrusion. Mold flash and protrusion shall not exceed 0.15 per side.
D. Falls within JEDEC MO–203 variation AB.

DCK (R–PDSO–G6) PLASTIC SMALL OUTLINE

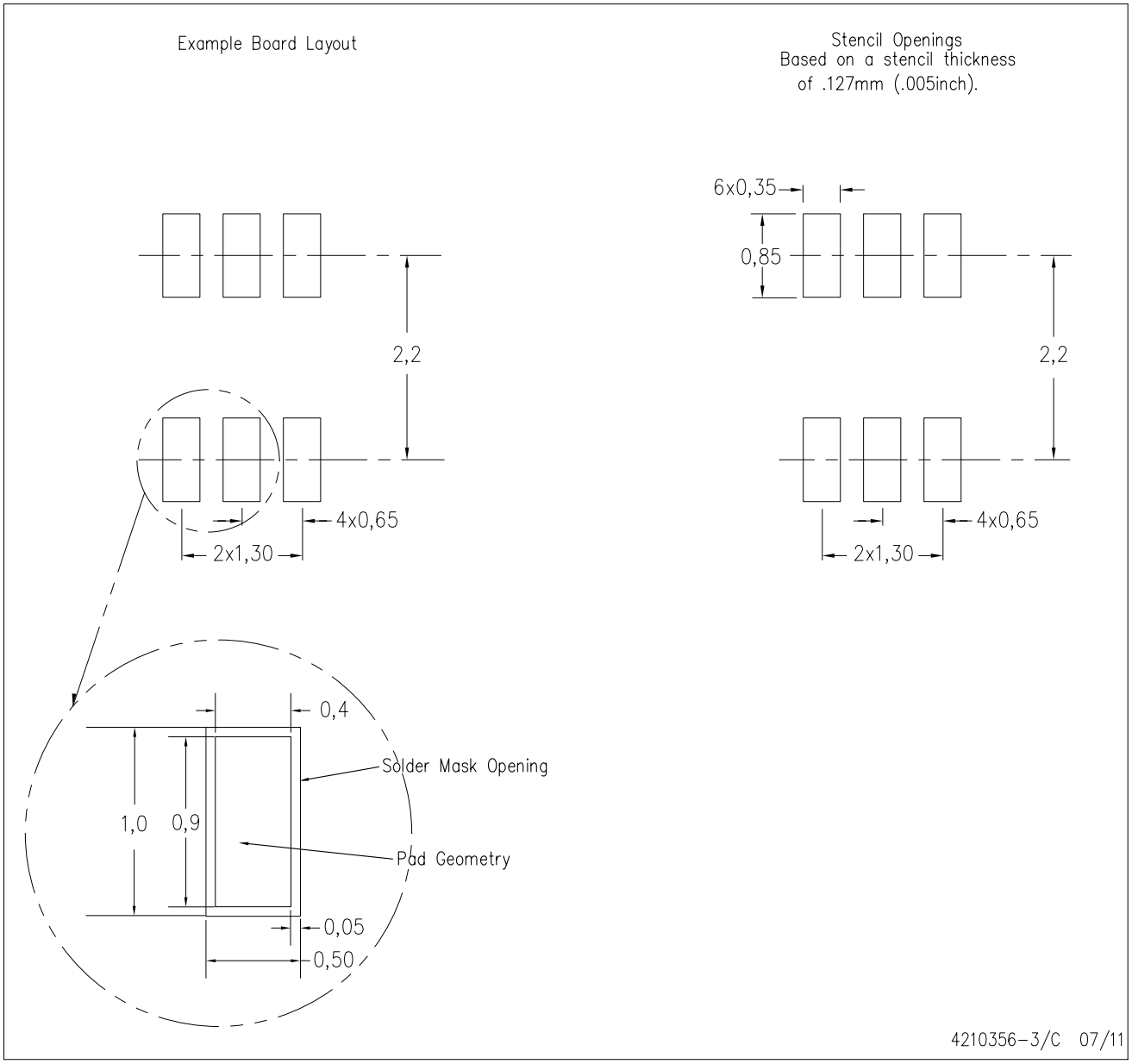

NOTES:
A. All linear dimensions are in millimeters.
B. This drawing is subject to change without notice.
C. Customers should place a note on the circuit board fabrication drawing not to alter the center solder mask defined pad.
D. Publication IPC–7351 is recommended for alternate designs.
E. Laser cutting apertures with trapezoidal walls and also rounding corners will offer better paste release. Customers should contact their board assembly site for stencil design recommendations. Example stencil design based on a 50% volumetric metal load solder paste. Refer to IPC–7525 for other stencil recommendations.

重要声明和免责声明

TI 均以“原样”提供技术性及可靠性数据（包括数据表）、设计资源（包括参考设计）、应用或其他设计建议、网络工具、安全信息和其他资源，不保证其中不含任何瑕疵，且不做任何明示或暗示的担保，包括但不限于对适销性、适合某特定用途或不侵犯任何第三方知识产权的暗示担保。

所述资源可供专业开发人员应用TI 产品进行设计使用。您将对以下行为独自承担全部责任：(1) 针对您的应用选择合适的TI 产品；(2) 设计、验证并测试您的应用；(3) 确保您的应用满足相应标准以及任何其他安全、安保或其他要求。所述资源如有变更，恕不另行通知。TI 对您使用所述资源的授权仅限于开发资源所涉及TI 产品的相关应用。除此之外不得复制或展示所述资源，也不提供其它TI或任何第三方的知识产权授权许可。如因使用所述资源而产生任何索赔、赔偿、成本、损失及债务等，TI对此概不负责，并且您须赔偿由此对TI 及其代表造成的损害。

TI 所提供产品均受TI 的销售条款 (http://www.ti.com.cn/zh-cn/legal/termsofsale.html) 以及ti.com.cn上或随附TI产品提供的其他可适用条款的约束。TI提供所述资源并不扩展或以其他方式更改TI 针对TI 产品所发布的可适用的担保范围或担保免责声明。

邮寄地址：上海市浦东新区世纪大道 1568 号中建大厦 32 楼，邮政编码：200122
Copyright © 2019 德州仪器半导体技术（上海）有限公司