OPA855 8GHz 增益带宽积、7V/V 增益稳定型、双极输入放大器

1 特性

- 高增益带宽积：8GHz
- 解补偿，增益 ≥ 7V/V（稳定）
- 低输入电压噪声：0.98nV/√Hz
- 压摆率：2750V/µs
- 低输入电容：
  - 共模：0.6pF
  - 差动：0.2pF
- 宽输入共模范围：
  - 与正电源相差 0.4V
  - 与负电源相差 1.1V
- $3V_{PP}$ 总输出摆幅
- 电源电压范围：3.3V 至 5.25V
- 静态电流：17.8mA
- 封装：8 引脚 WSON
- 温度范围：–40 至 +125°C

2 应用

- 高速跨阻放大器
- 激光测距
- CCD 输出缓冲器
- 高速缓冲器
- 光学时域反射法 (OTDR)
- 高速有源滤波器
- 3D 扫描仪
- 硅光电倍增器 (SiPM) 缓冲放大器
- 光电倍增管后置放大器

3 说明

OPA855 是一款具有双极输入的宽带低噪声运算放大器，适用于宽带跨阻和电压放大器 应用。将该器件配置为跨阻放大器 (TIA) 时，8GHz 增益带宽积 (GBWP) 能够在低电容光电二极管应用中以高达几十千欧的跨阻增益。

下图展示了在将 OPA855 配置为 TIA 时该放大器的带宽和噪声性能与光电二极管电容的函数关系。计算总噪声时的带宽范围为从直流到左轴上计算得出的频率 f。OPA855 封装具有一个反馈引脚 (FB)，可简化输入和输出之间的反馈网络连接。

OPA855 经过优化，可在光学飞行时间 (ToF) 系统中运行，在该系统中 OPA855 与时数转换器（如 TDC7201）配合使用。可在具有差分输出放大器（如 THS4541 或 LMH5401）的高分辨率激光雷达系统中使用 OPA855 来驱动高速模数转换器 (ADC)。

器件信息(1)

器件编号	封装	封装尺寸（标称值）
OPA855	WSON (8)	2.00mm × 2.00mm

(1) 如需了解所有可用封装，请参阅数据表末尾的封装选项附录。

高速飞行时间接收器

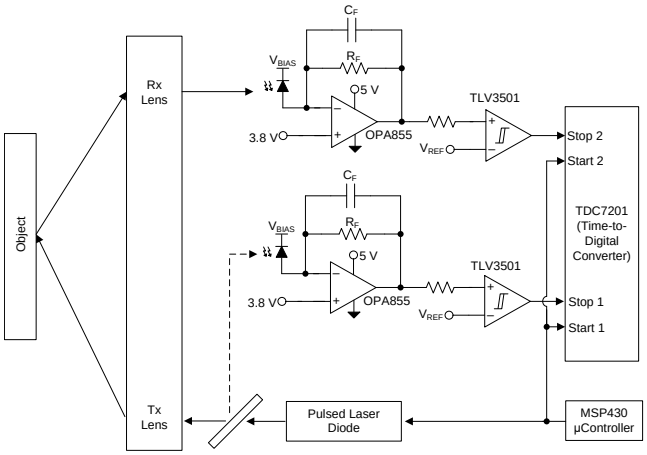

光电二极管电容与带宽和噪声间的关系

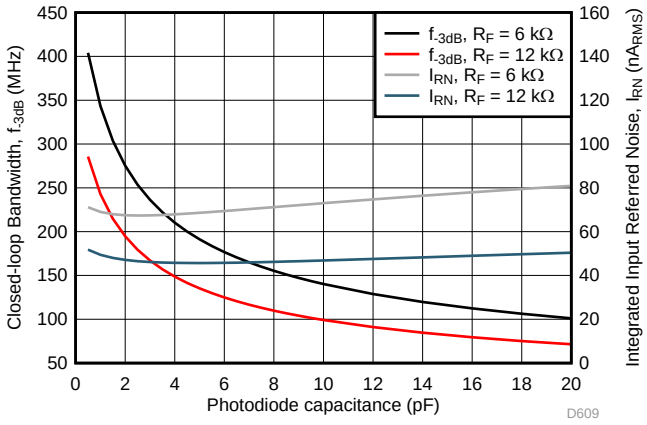

本文档旨在为方便起见，提供有关 TI 产品中文版本的信息，以确认产品的概要。 有关适用的官方英文版本的最新信息，请访问 www.ti.com，其内容始终优先。 TI 不保证翻译的准确性和有效性。 在实际设计之前，请务必参考最新版本的英文版本。

目录

1 特性 ... 1
2 应用 ... 1
3 说明 ... 1
4 修订历史记录 ... 2
5 **Device Comparison Table** ... 3
6 **Pin Configuration and Functions** ... 3
7 **Specifications** ... 4
7.1 Absolute Maximum Ratings ... 4
7.2 ESD Ratings ... 4
7.3 Recommended Operating Conditions ... 4
7.4 Thermal Information ... 4
7.5 Electrical Characteristics ... 5
7.6 Typical Characteristics ... 7
8 **Parameter Measurement Information** ... 14
8.1 Parameter Measurement Information ... 14
9 **Detailed Description** ... 15
9.1 Overview ... 15
9.2 Functional Block Diagram ... 15
9.3 Feature Description ... 16
9.4 Device Functional Modes ... 19
10 **Application and Implementation** ... 20
10.1 Application Information ... 20
10.2 Typical Application ... 21
11 **Power Supply Recommendations** ... 23
12 **Layout** ... 24
12.1 Layout Guidelines ... 24
12.2 Layout Example ... 24
13 器件和文档支持 ... 26
13.1 器件支持 ... 26
13.2 文档支持 ... 26
13.3 接收文档更新通知 ... 26
13.4 社区资源 ... 26
13.5 商标 ... 26
13.6 静电放电警告 ... 26
13.7 术语表 ... 26
14 机械、封装和可订购信息 ... 26

4 修订历史记录

Changes from Original (July 2018) to Revision A **Page**

- 已更改 将“预告信息”更改成了“生产数据（有效）” ... 1

Copyright © 2018, Texas Instruments Incorporated

5 Device Comparison Table

DEVICE	INPUT TYPE	MINIMUM STABLE GAIN	VOLTAGE NOISE (nV/√Hz)	INPUT CAPACITANCE (pF)	GAIN BANDWIDTH (GHz)
OPA855	Bipolar	7 V/V	0.98	0.8	8
OPA858	CMOS	7 V/V	2.5	0.8	5.5
OPA859	CMOS	1 V/V	3.3	0.8	0.9
LMH6629	Bipolar	10 V/V	0.69	5.7	4

6 Pin Configuration and Functions

DSG Package
8-Pin WSON With Exposed Thermal Pad
Top View

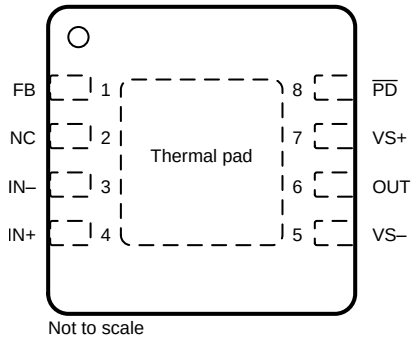

Not to scale

Pin Functions

PIN		I/O	DESCRIPTION
NAME	NO.		
FB	1	I	Feedback connection to output of amplifier
IN–	3	I	Inverting input
IN+	4	I	Noninverting input
NC	2	—	Do not connect
OUT	6	O	Amplifier output
$\overline{PD}$	8	I	Power down connection. $\overline{PD}$ = logic low = power off mode; $\overline{PD}$ = logic high = normal operation.
VS–	5	—	Negative voltage supply
VS+	7	—	Positive voltage supply
Thermal pad		—	Connect the thermal pad to VS–

Copyright © 2018, Texas Instruments Incorporated

7 Specifications

7.1 Absolute Maximum Ratings

over operating free-air temperature range (unless otherwise noted)(1)

		MIN	MAX	UNIT
V_S	Total supply voltage (V_{S+} – $V_{S–}$)		5.5	V
V_{IN+}, $V_{IN–}$	Input voltage	($V_{S–}$) – 0.5	(V_{S+}) + 0.5	V
V_{ID}	Differential input voltage		1	V
V_{OUT}	Output voltage	($V_{S–}$) – 0.5	(V_{S+}) + 0.5	V
I_{IN}	Continuous input current		±10	mA
I_{OUT}	Continuous output current(2)		±100	mA
T_J	Junction temperature		150	°C
T_A	Operating free-air temperature	–40	125	°C
T_{stg}	Storage temperature	–65	150	°C

(1) Stresses beyond those listed under *Absolute Maximum Ratings* may cause permanent damage to the device. These are stress ratings only, which do not imply functional operation of the device at these or any other conditions beyond those indicated under *Recommended Operating Conditions*. Exposure to absolute-maximum-rated conditions for extended periods may affect device reliability.
(2) Long-term continuous output current for electromigration limits.

7.2 ESD Ratings

			VALUE	UNIT
$V_{(ESD)}$	Electrostatic discharge	Human-body model (HBM), per ANSI/ESDA/JEDEC JS-001(1)	±1500	V
		Charged-device model (CDM), per JEDEC specification JESD22-C101(2)	±1500	

(1) JEDEC document JEP155 states that 500-V HBM allows safe manufacturing with a standard ESD control process.
(2) JEDEC document JEP157 states that 250-V CDM allows safe manufacturing with a standard ESD control process.

7.3 Recommended Operating Conditions

over operating free-air temperature range (unless otherwise noted)

		MIN	NOM	MAX	UNIT
V_S	Total supply voltage (V_{S+} – $V_{S–}$)	3.3	5	5.25	V
T_A	Operating free-air temperature	–40		125	°C

7.4 Thermal Information

THERMAL METRIC(1)		OPA855 DSG (WSON) 8 PINS	UNIT
$R_{\theta JA}$	Junction-to-ambient thermal resistance	80.1	°C/W
$R_{\theta JC(top)}$	Junction-to-case (top) thermal resistance	100	°C/W
$R_{\theta JB}$	Junction-to-board thermal resistance	45	°C/W
ψ_{JT}	Junction-to-top characterization parameter	6.8	°C/W
ψ_{JB}	Junction-to-board characterization parameter	45.2	°C/W
$R_{\theta JC(bot)}$	Junction-to-case (bottom) thermal resistance	22.7	°C/W

(1) For more information about traditional and new thermal metrics, see the *Semiconductor and IC Package Thermal Metrics* application report.

Copyright © 2018, Texas Instruments Incorporated

7.5 Electrical Characteristics

at V_{S+} = 5 V, $V_{S–}$ = 0 V, G = 7 V/V, R_F = 453 Ω, input common-mode biased at midsupply, R_L = 200 Ω, output load is referenced to midsupply, and T_A = 25℃ (unless otherwise noted)

PARAMETER		TEST CONDITIONS	MIN	TYP	MAX	UNIT
AC PERFORMANCE						
SSBW	Small-signal bandwidth	V_{OUT} = 100 mV_{PP}		2.5		GHz
LSBW	Large-signal bandwidth	V_{OUT} = 2 V_{PP}		850		MHz
GBWP	Gain-bandwidth product			8		GHz
	Bandwdith for 0.1-dB flatness			200		MHz
SR	Slew rate (10%-90%)	V_{OUT} = 2-V step		2750		V/µs
t_r	Rise time	V_{OUT} = 100-mV step		0.17		ns
t_f	Fall time	V_{OUT} = 100-mV step		0.17		ns
	Settling time to 0.1%	V_{OUT} = 2-V step		2.3		ns
	Settling time to 0.001%	V_{OUT} = 2-V step		2600		ns
	Overshoot or undershoot	V_{OUT} = 2-V step		5%		
	Overdrive recovery	2x output overdrive		3		ns
HD2	Second-order harmonic distortion	f = 10 MHz, V_{OUT} = 2 V_{PP}		90		dBc
		f = 100 MHz, V_{OUT} = 2 V_{PP}		65		
HD3	Third-order harmonic distortion	f = 10 MHz, V_{OUT} = 2 V_{PP}		86		dBc
		f = 100 MHz, V_{OUT} = 2 V_{PP}		74		
e_n	Input-referred voltage noise	f = 1 MHz		0.98		nV/√Hz
e_i	Input-referred current noise	f = 1 MHz		2.5		pA/√Hz
z_O	Closed-loop output impedance	f = 1 MHz		0.15		Ω
DC PERFORMANCE						
A_{OL}	Open-loop voltage gain		70	76		dB
V_{OS}	Input offset voltage	T_A = 25°C	–1.5	±0.2	1.5	mV
$\Delta V_{OS}/\Delta T$	Input offset voltage drift	T_A = –40°C to 125°C		0.5		µV/°C
I_B	Input bias current (1)	T_A = 25°C	–18.5	–12	–5	µA
$\Delta I_B/\Delta T$	Input bias current drift	T_A = –40°C to +125°C		–0.08		µA/°C
I_{BOS}	Input offset current	T_A = 25°C	–1	±0.1	1	µA
$\Delta I_{BOS}/\Delta T$	Input offset current drift	T_A = –40°C to +125°C		1		nA/°C
CMRR	Common-mode rejection ratio	V_{CM} = ±0.5 V referred to midsupply	90	100		dB
INPUT						
	Common-mode input resistance			2.3		MΩ
C_{CM}	Common-mode input capacitance			0.6		pF
	Differential input resistance			5		kΩ
C_{DIFF}	Differential input capacitance			0.2		pF
V_{IH}	Common-mode input range (high)	CMRR > 80 dB, V_{S+} = 3.3 V	2.7	2.9		V
V_{IL}	Common-mode input range (low)	CMRR > 80 dB, V_{S+} = 3.3 V		1.1	1.3	V
V_{IH}	Common-mode input range (high)	CMRR > 80 dB	4.4	4.6		V
V_{IH}	Common-mode input range (high)	T_A = –40°C to +125 °C, CMRR > 80 dB		4.3		V
V_{IL}	Common-mode input range (low)	CMRR > 80 dB		1.1	1.3	V
V_{IL}	Common-mode input range (low)	T_A = –40°C to +125°C, CMRR > 80 dB		1.3		V

(1) Current flowing into the input pin is considered negative

Copyright © 2018, Texas Instruments Incorporated

Electrical Characteristics (continued)

at V_{S+} = 5 V, $V_{S–}$ = 0 V, G = 7 V/V, R_F = 453 Ω, input common-mode biased at midsupply, R_L = 200 Ω, output load is referenced to midsupply, and T_A = 25℃ (unless otherwise noted)

PARAMETER		TEST CONDITIONS	MIN	TYP	MAX	UNIT
OUTPUT						
V_{OH}	Output voltage (high)(2)	T_A = 25°C, V_{S+} = 3.3 V	2.35	2.4		V
V_{OH}	Output voltage (high)(2)	T_A = 25°C	3.95	4.1		V
		T_A = –40°C to +125°C		4		
V_{OL}	Output voltage (low)(2)	T_A = 25°C, V_{S+} = 3.3 V		1.05	1.15	V
V_{OL}	Output voltage (low)(2)	T_A = 25°C		1.05	1.15	V
		T_A = –40°C to +125°C		1.1		
I_{O_LIN}	Linear output drive (sink and source)	R_L = 10 Ω, A_{OL} > 60 dB	65	80		mA
		T_A = –40°C to +125°C, R_L = 10 Ω, A_{OL} > 60 dB		70		
I_{SC}	Output short-circuit current		85	105		mA
POWER SUPPLY						
I_Q	Quiescent current		16	17.8	19.5	mA
		T_A = –40°C		16.7		
		T_A = 125°C		19.5		
PSRR+	Positive power-supply rejection ratio		80	86		dB
PSRR–	Negative power-supply rejection ratio		70	80		
POWER DOWN						
	Disable voltage threshold	Amplifier OFF below this voltage	0.65	1		V
	Enable voltage threshold	Amplifier ON below this voltage		1.5	1.8	V
	Power-down quiescent current			70	140	μA
	$\overline{PD}$ bias current			70	140	μA
	Turnon time delay	Time to V_{OUT} = 90% of final value		15		ns
	Turnoff time delay			120		ns

(2) Amplifier output saturated

版权 © 2018, Texas Instruments Incorporated

7.6 Typical Characteristics

at T_A = 25°C, V_{S+} = 2.5 V, $V_{S–}$ = –2.5 V, V_{IN+} = 0 V, R_F = 453 Ω, Gain = 7 V/V, R_L = 200 Ω, and output load referenced to midsupply (unless otherwise noted)

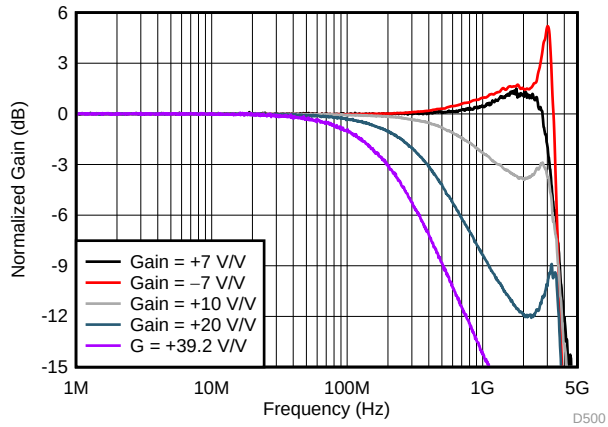

V_{OUT} = 100 mV_{PP}; See Parameter Measurement Information for circuit configuration

图 1. Small-Signal Frequency Response vs Gain

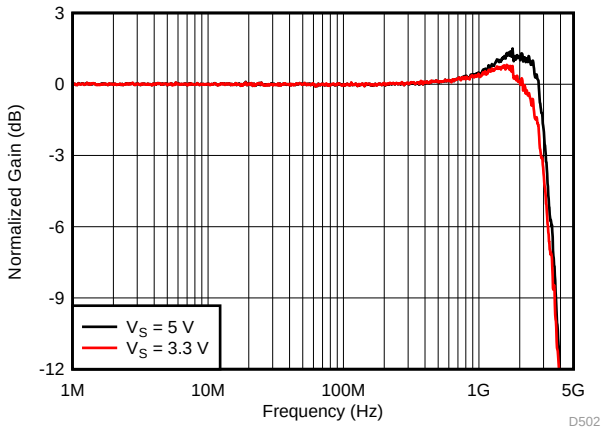

V_{OUT} = 100 mV_{PP}

图 2. Small-Signal Frequency Response vs Supply Voltage

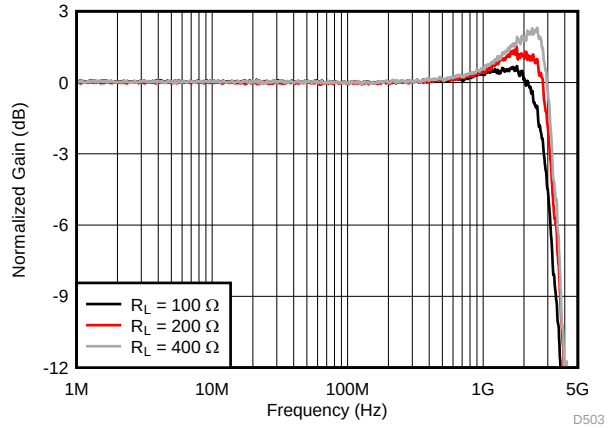

V_{OUT} = 100 mV_{PP}

图 3. Small-Signal Frequency Response vs Output Load

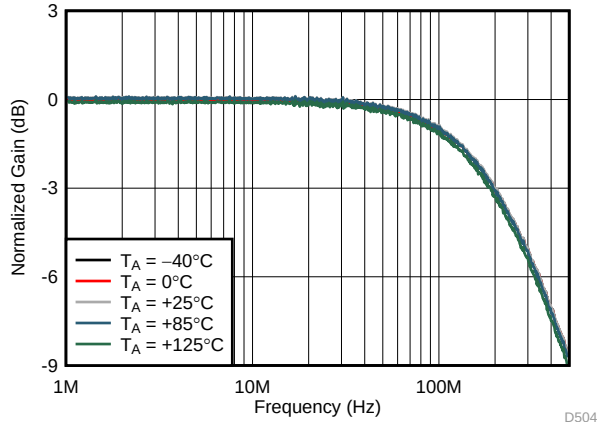

Gain = 39.2 V/V, R_F = 953 Ω V_{OUT} = 100 mV_{PP}

图 4. Small-Signal Frequency Response vs Ambient Temperature

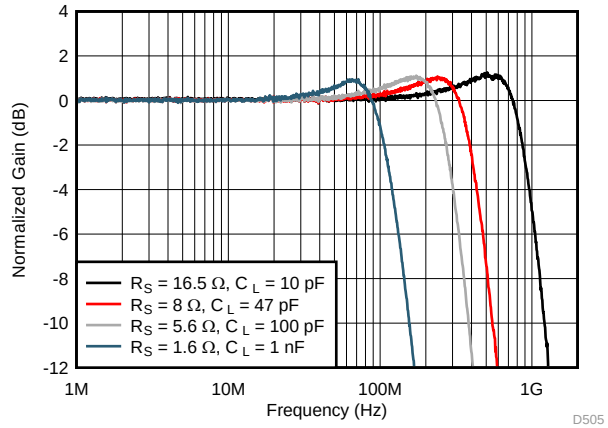

V_{OUT} = 100 mV_{PP} ; See 图 45 for circuit configuration

图 5. Small-Signal Frequency Response vs Capacitive Load

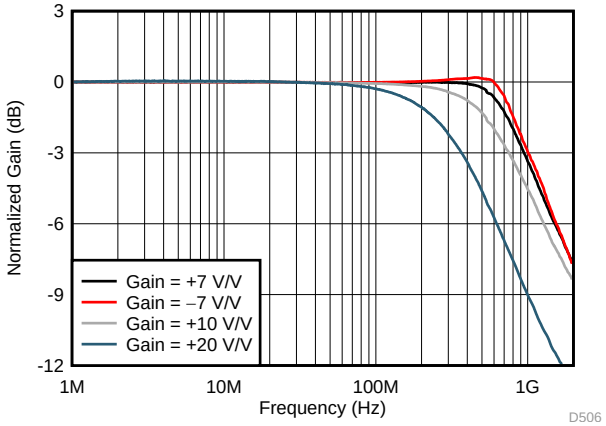

V_{OUT} = 2 V_{PP}

图 6. Large-Signal Frequency Response vs Gain

Typical Characteristics (接下页)

at T_A = 25°C, V_{S+} = 2.5 V, $V_{S–}$ = –2.5 V, V_{IN+} = 0 V, R_F = 453 Ω, Gain = 7 V/V, R_L = 200 Ω, and output load referenced to midsupply (unless otherwise noted)

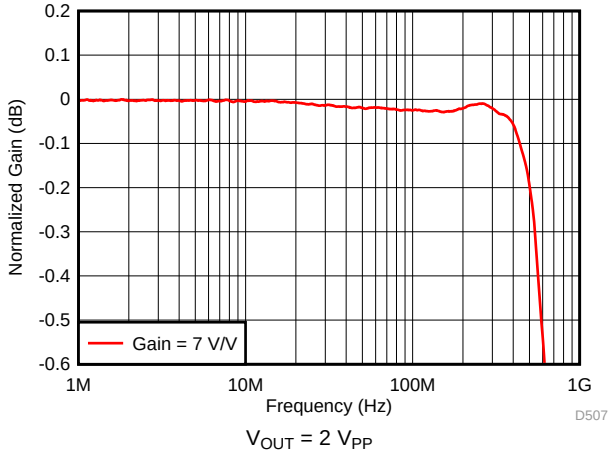

图 7. Large-Signal Response for 0.1-dB Gain Flatness

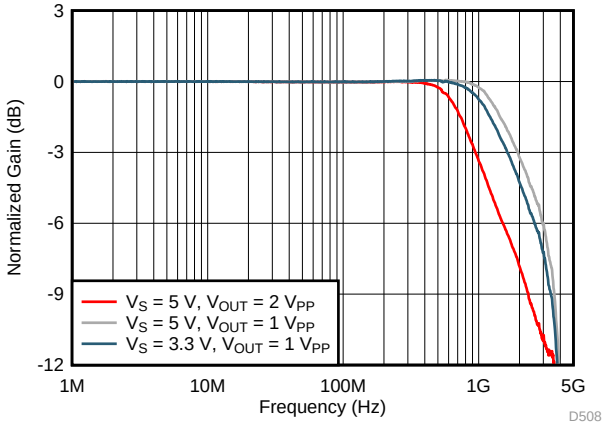

图 8. Large-Signal Frequency Response vs Voltage Supply

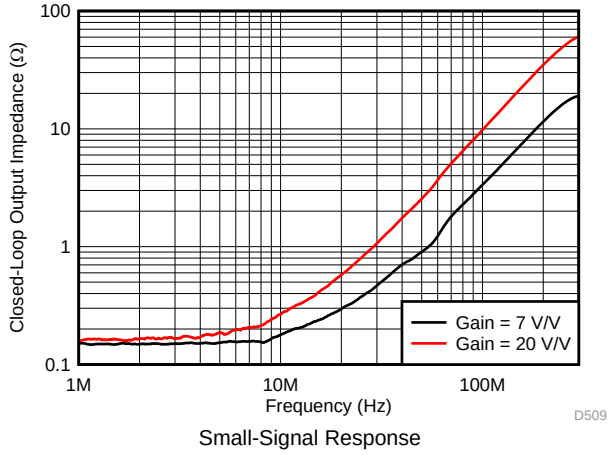

图 9. Closed-Loop Output Impedance vs Frequency

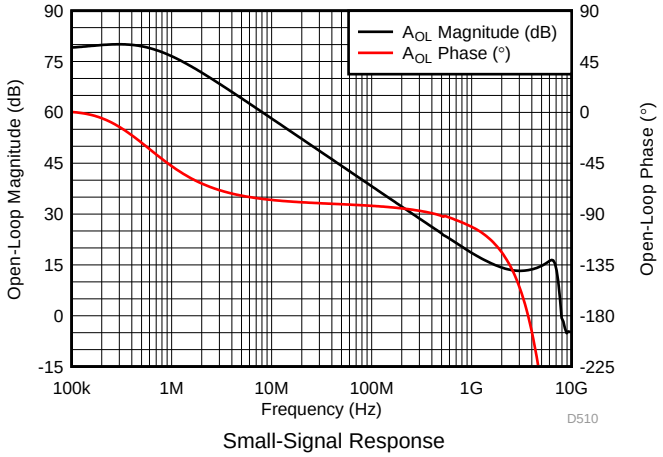

图 10. Open-Loop Magnitude and Phase vs Frequency

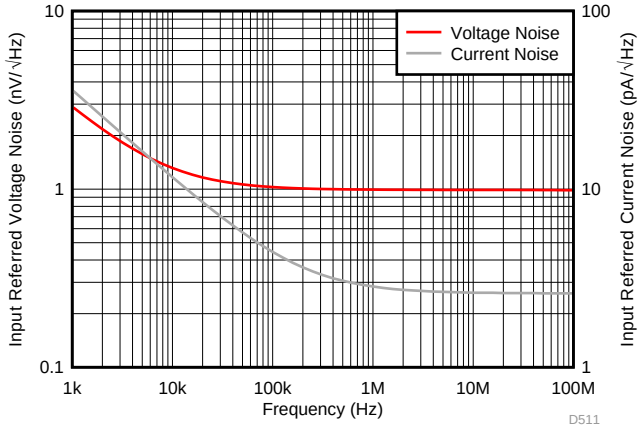

图 11. Voltage and Current Noise Density vs Frequency

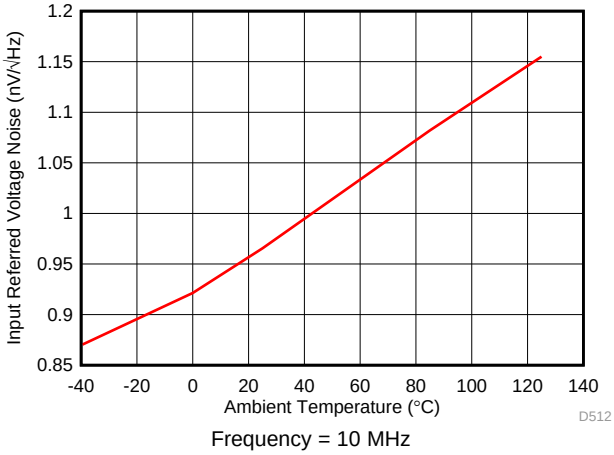

图 12. Voltage Noise Density vs Ambient Temperature

版权 © 2018, Texas Instruments Incorporated

Typical Characteristics (接下页)

at T_A = 25°C, V_{S+} = 2.5 V, $V_{S–}$ = –2.5 V, V_{IN+} = 0 V, R_F = 453 Ω, Gain = 7 V/V, R_L = 200 Ω, and output load referenced to midsupply (unless otherwise noted)

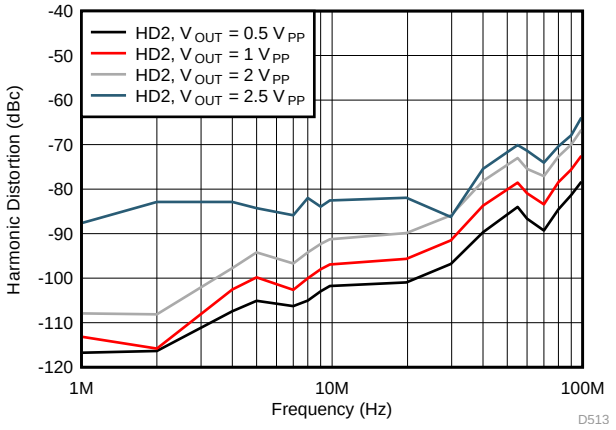

图 13. Harmonic Distortion (HD2) vs Output Swing

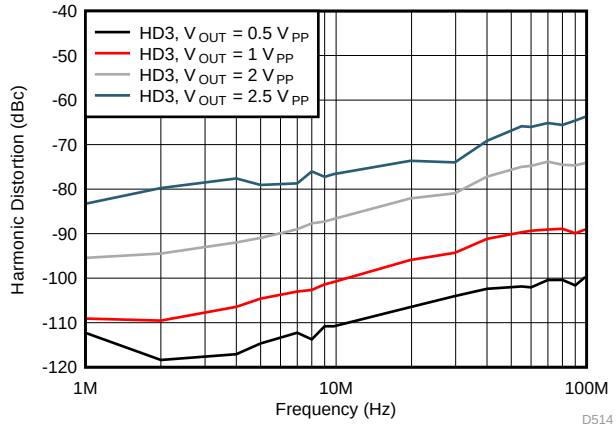

图 14. Harmonic Distortion (HD3) vs Output Swing

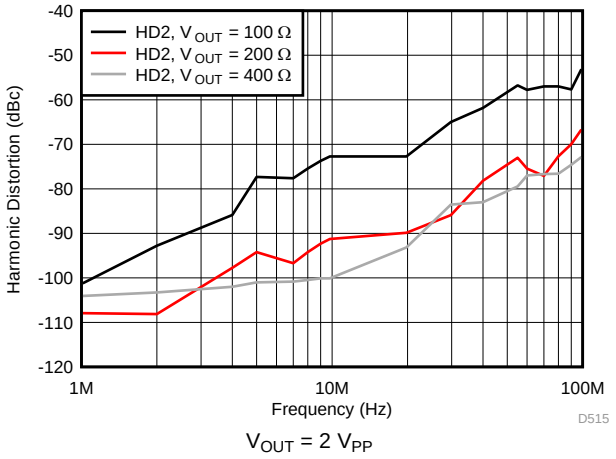

图 15. Harmonic Distortion (HD2) vs Output Load

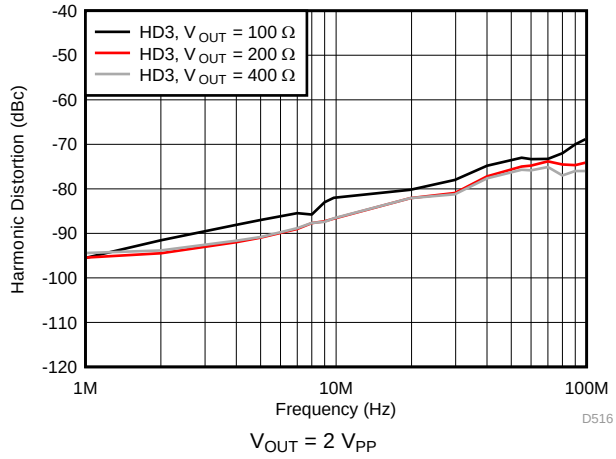

图 16. Harmonic Distortion (HD3) vs Output Load

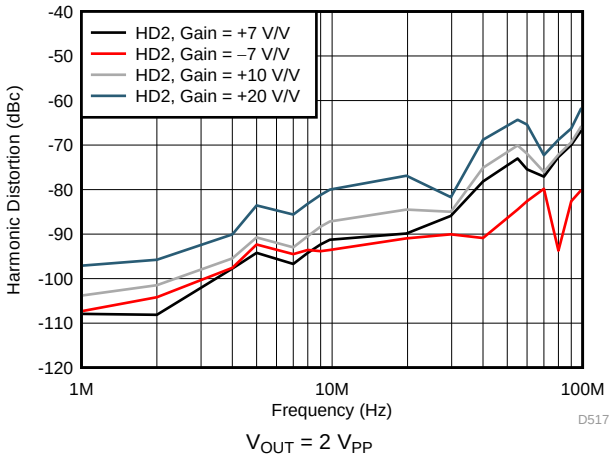

图 17. Harmonic Distortion (HD2) vs Gain

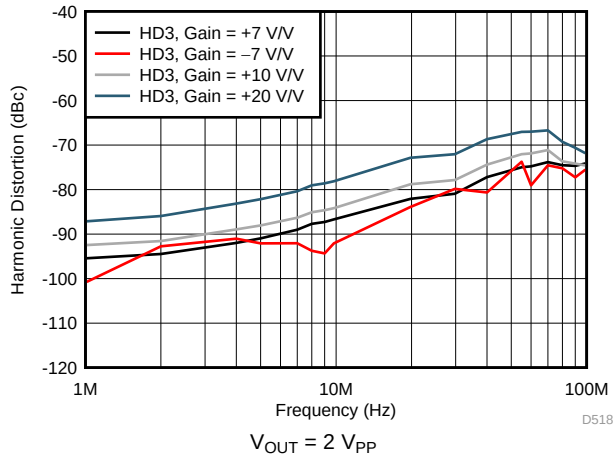

图 18. Harmonic Distortion (HD3) vs Gain

Typical Characteristics (接下页)

at T_A = 25°C, V_{S+} = 2.5 V, $V_{S–}$ = –2.5 V, V_{IN+} = 0 V, R_F = 453 Ω, Gain = 7 V/V, R_L = 200 Ω, and output load referenced to midsupply (unless otherwise noted)

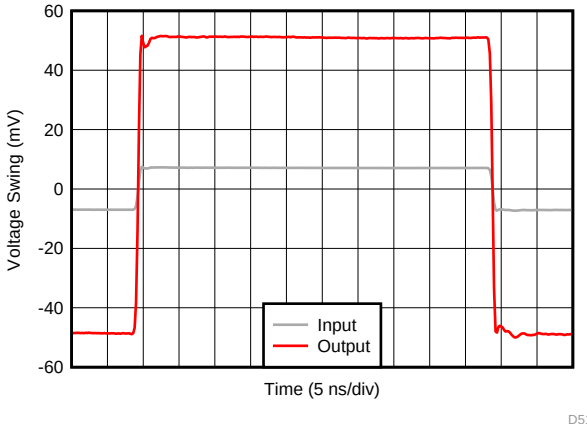

Average Rise and Fall Time (10% - 90%) = 300 ps
Rise and fall time limited by test equipment

图 19. Small-Signal Transient Response

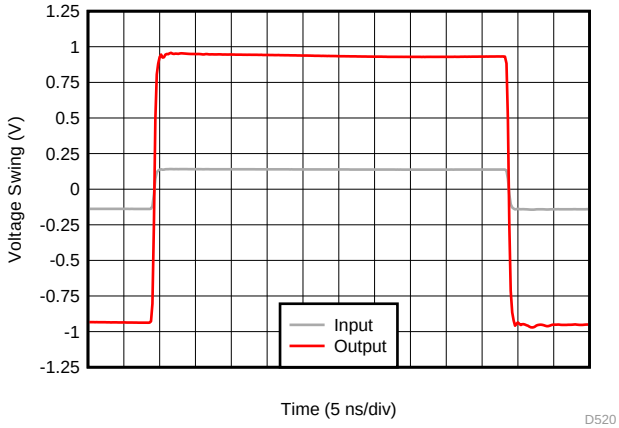

Average Rise and Fall Time (10% - 90%) = 569 ps

图 20. Large-Signal Transient Response

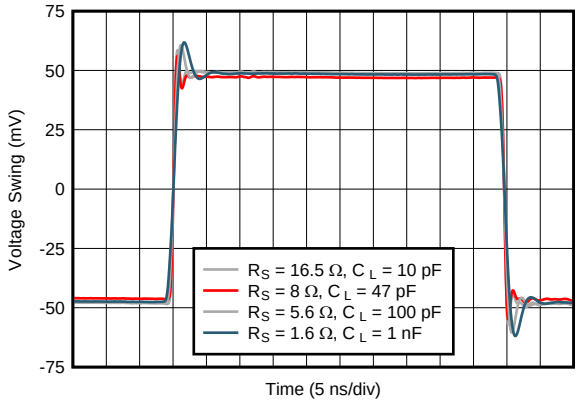

图 21. Small-Signal Transient Response vs Capacitive Load

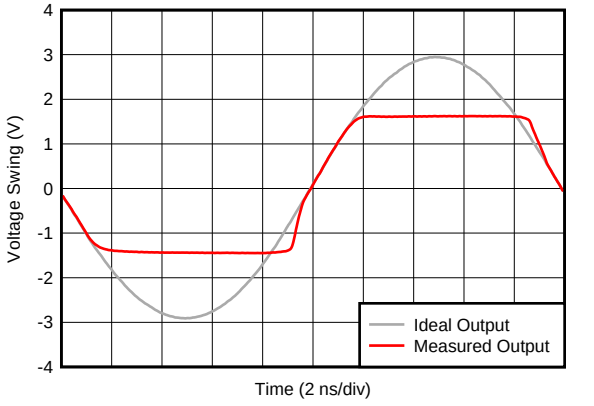

2x Output Overdrive

图 22. Output Overload Response

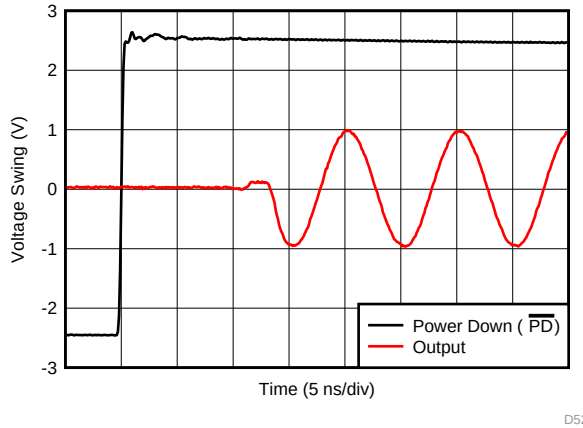

图 23. Turnon Transient Response

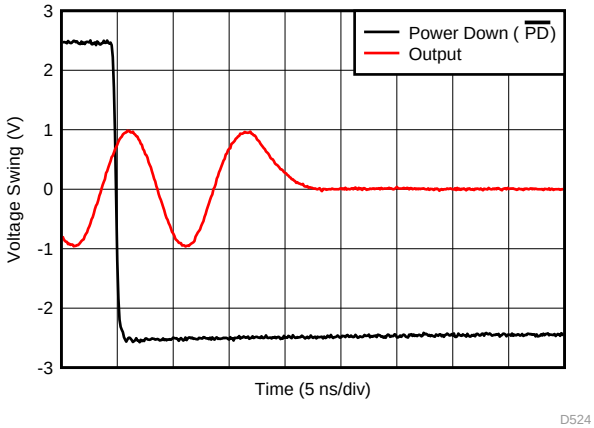

图 24. Turnoff Transient Response

版权 © 2018, Texas Instruments Incorporated

Typical Characteristics (接下页)

at T_A = 25°C, V_{S+} = 2.5 V, $V_{S–}$ = –2.5 V, V_{IN+} = 0 V, R_F = 453 Ω, Gain = 7 V/V, R_L = 200 Ω, and output load referenced to midsupply (unless otherwise noted)

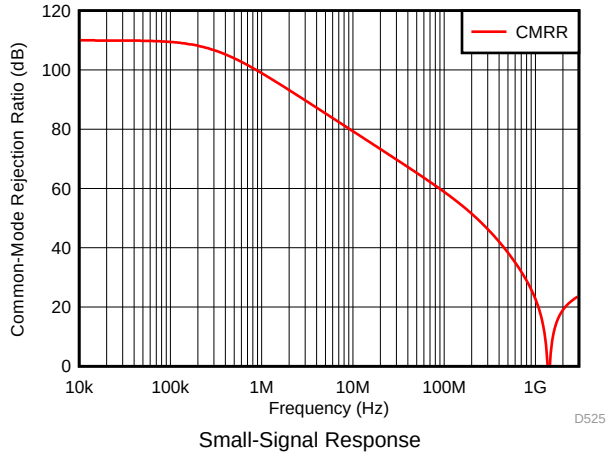

图 25. Common-Mode Rejection Ratio vs Frequency

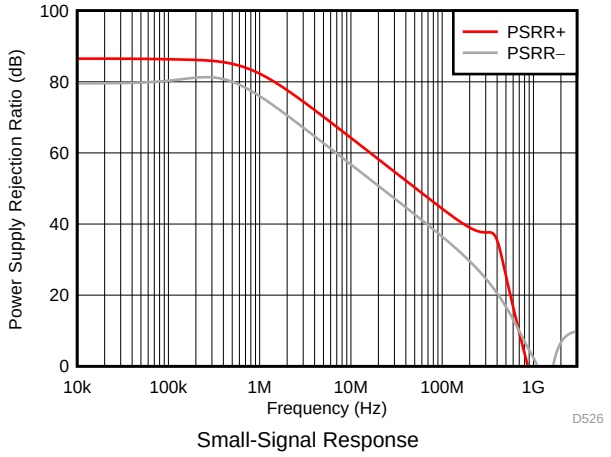

图 26. Power Supply Rejection Ratio vs Frequency

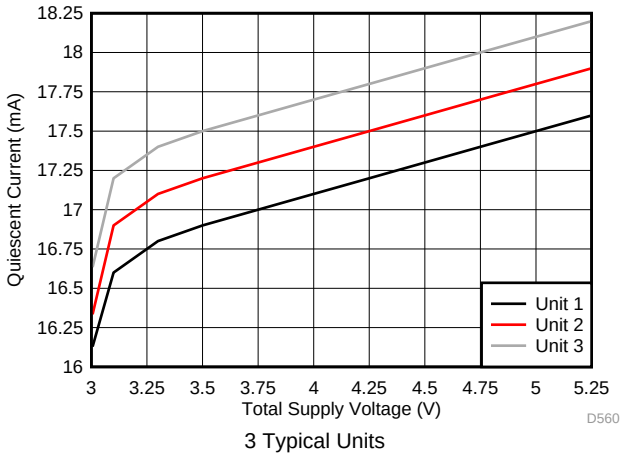

图 27. Quiescent Current vs Supply Voltage

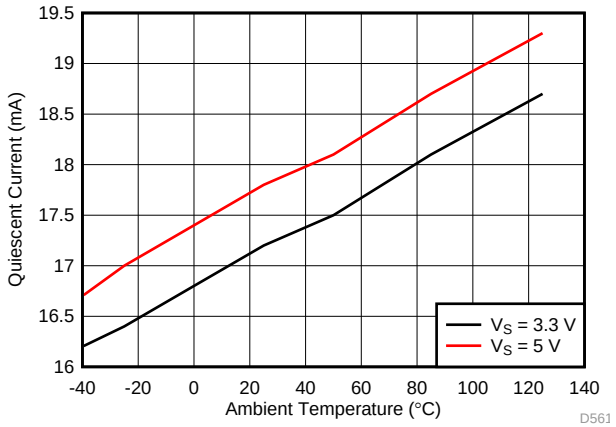

图 28. Quiescent Current vs Ambient Temperature

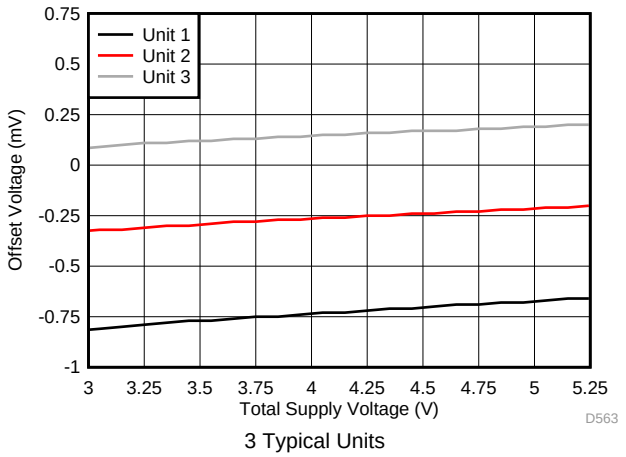

图 29. Offset Voltage vs Supply Voltage

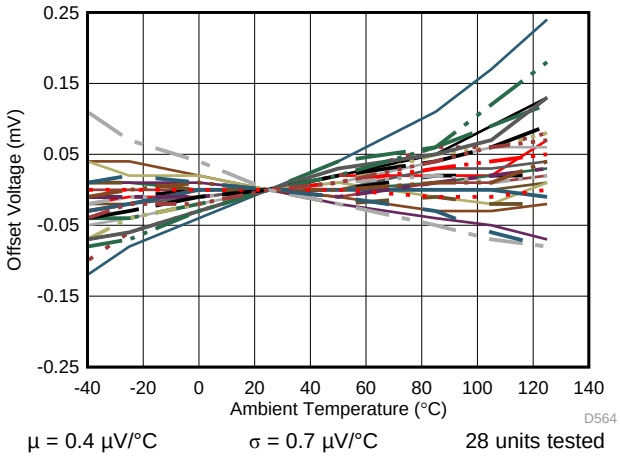

图 30. Offset Voltage vs Ambient Temperature

Typical Characteristics (接下页)

at T_A = 25°C, V_{S+} = 2.5 V, $V_{S–}$ = –2.5 V, V_{IN+} = 0 V, R_F = 453 Ω, Gain = 7 V/V, R_L = 200 Ω, and output load referenced to midsupply (unless otherwise noted)

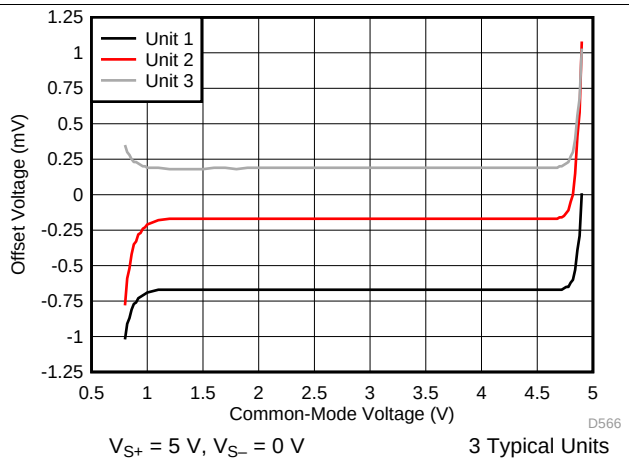

图 31. Offset Voltage vs Input Common-Mode Voltage

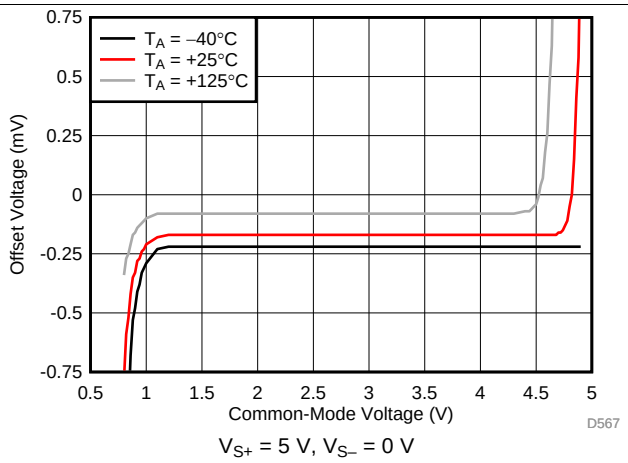

图 32. Offset Voltage vs Input Common-Mode Voltage vs Ambient Temperature

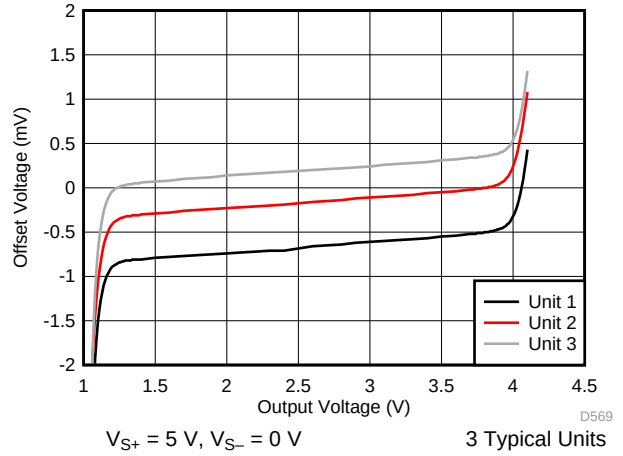

图 33. Offset Voltage vs Output Swing

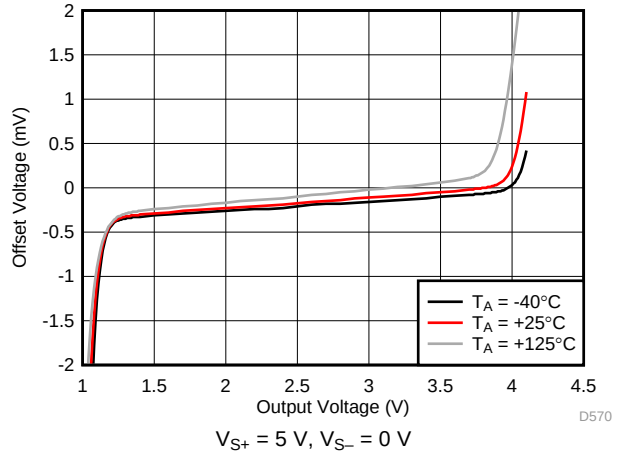

图 34. Offset Voltage vs Output Swing vs Ambient Temperature

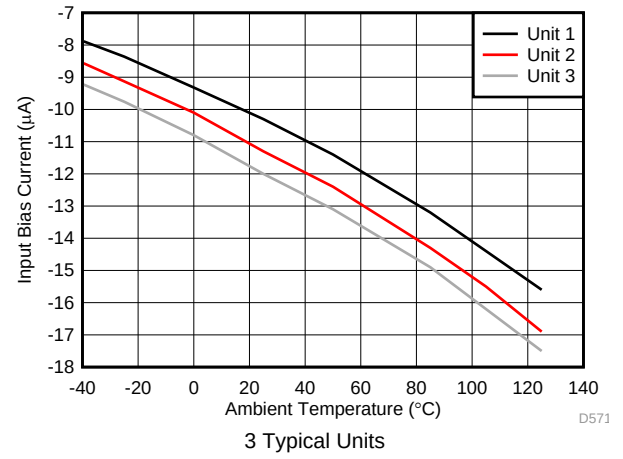

图 35. Input Bias Current vs Ambient Temperature

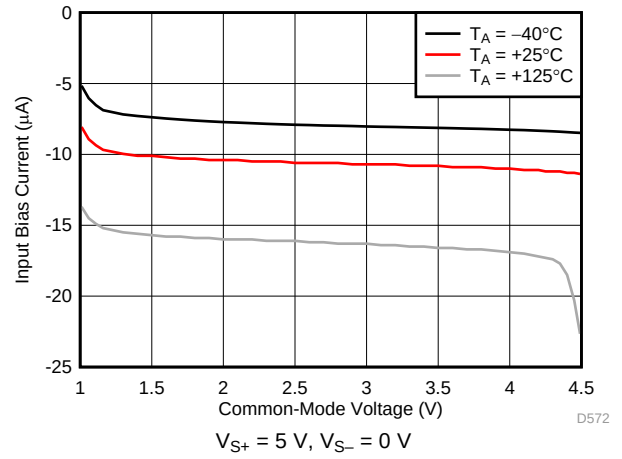

图 36. Input Bias Current vs Input Common-Mode Voltage vs Ambient Temperature

版权 © 2018, Texas Instruments Incorporated

Typical Characteristics (接下页)

at T_A = 25°C, V_{S+} = 2.5 V, $V_{S–}$ = –2.5 V, V_{IN+} = 0 V, R_F = 453 Ω, Gain = 7 V/V, R_L = 200 Ω, and output load referenced to midsupply (unless otherwise noted)

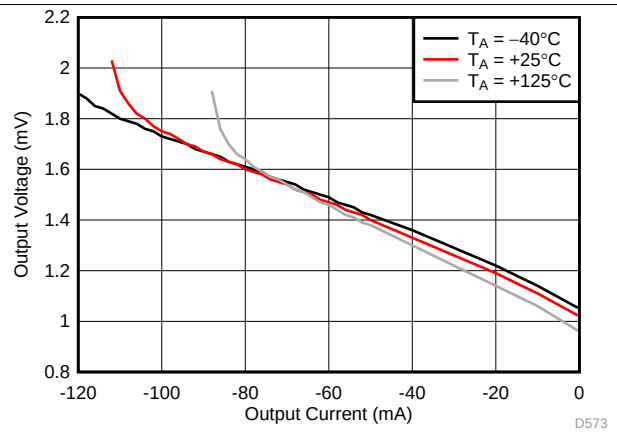

V_{S+} = 5 V, $V_{S–}$ = 0 V

图 37. Output Swing vs Sinking Current

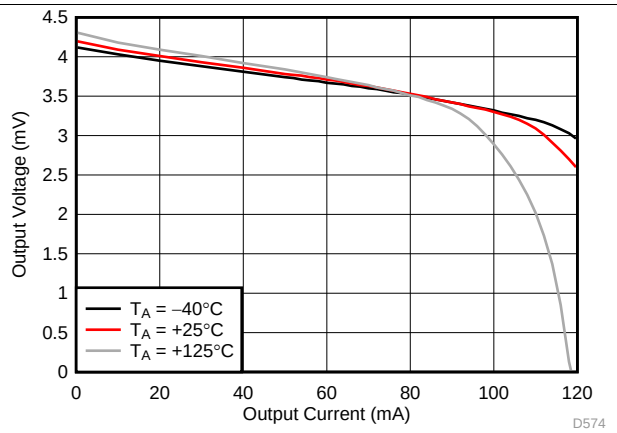

V_{S+} = 5 V, $V_{S–}$ = 0 V

图 38. Output Swing vs Sourcing Current

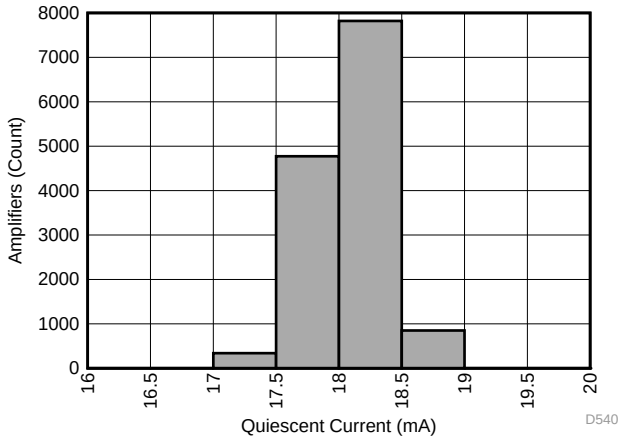

μ = 17.6 mA σ = 0.3 mA 13780 units tested

图 39. Quiescent Current Distribution

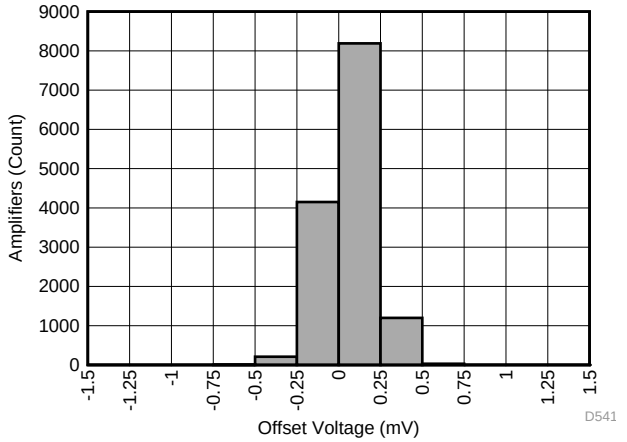

μ = –0.2 mV σ = 0.15 mV 13780 units tested

图 40. Offset Voltage Distribution

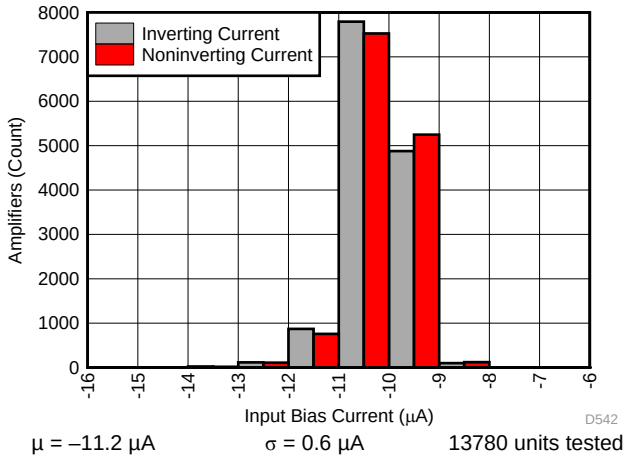

μ = –11.2 μA σ = 0.6 μA 13780 units tested

图 41. Input Bias Current Distribution

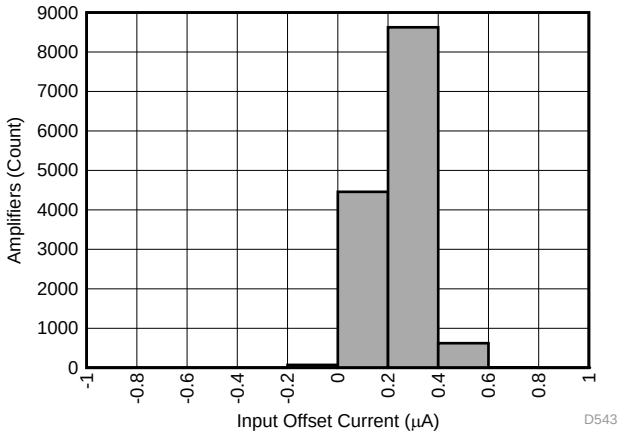

μ = 0.04 μA σ = 0.1 μA 13780 units tested

图 42. Input Offset Current Distribution

8 Parameter Measurement Information

8.1 Parameter Measurement Information

The various test setup configurations for the OPA855 are shown in 图 43, 图 44, and 图 45. When configuring the OPA855 in a gain of +39.2 V/V, feedback resistor R_F was set to 953 Ω.

图 1 shows 5-dB of peaking with the amplifier in an inverting configuration of –7 V/V with the amplifier configured as shown in 图 44. The 50-Ω matched termination of this circuit configuration results in the amplifier being configured in a noise gain of 5.3 V/V, which is lower than the recommended +7 V/V.

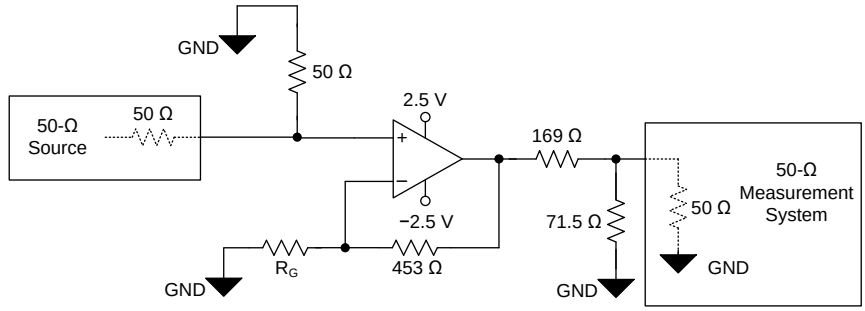

R_G values depend on gain configuration

图 43. Noninverting Configuration

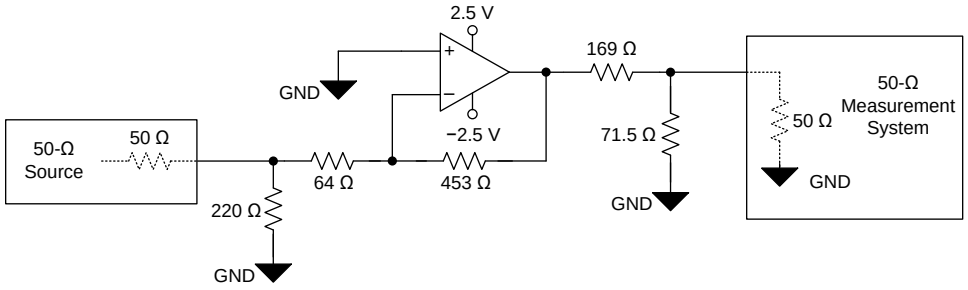

图 44. Inverting Configuration (Gain = –7 V/V)

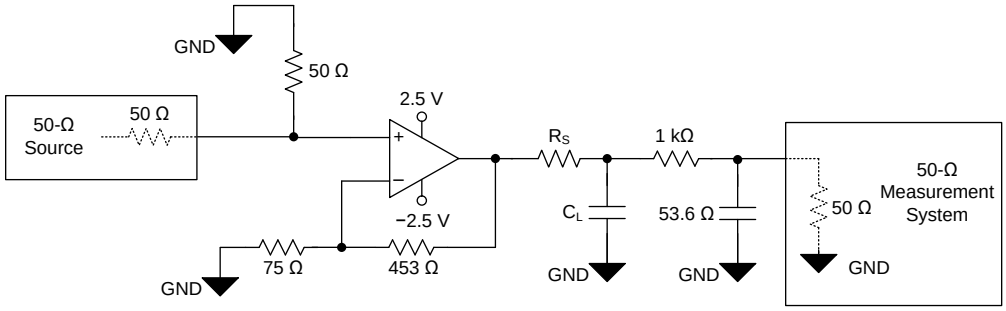

图 45. Capacitive Load Driver Configuration

版权 © 2018, Texas Instruments Incorporated

9 Detailed Description

9.1 Overview

The ultra-wide, 8-GHz gain bandwidth product (GBWP) of the OPA855, combined with the broadband voltage noise of 0.98 nV/√Hz, produces a viable amplifier for wideband transimpedance applications, high-speed data acquisition systems, and applications with weak signal inputs that require low-noise and high-gain front ends. The OPA855 combines multiple features to optimize dynamic performance. In addition to the wide, small-signal bandwidth, the OPA855 has 850 MHz of large-signal bandwidth (2 V_{PP}), and a slew rate of 2750 V/µs, making the device a viable option for high-speed pulsed applications.

The OPA855 is offered in a 2-mm × 2-mm, 8-pin WSON package that features a feedback (FB) pin for a simple feedback network connection between the amplifiers output and inverting input. Excess capacitance on an amplifiers input pin can reduce phase margin causing instability. This problem is exacerbated in the case of very wideband amplifiers like the OPA855. To reduce the effects of stray capacitance on the input node, the OPA855 pinout features an isolation pin (NC) between the feedback and inverting input pins that increases the physical spacing between them thereby reducing parasitic coupling at high frequencies. The OPA855 also features a very low capacitance input stage with only 0.8-pF of total input capacitance.

9.2 Functional Block Diagram

The OPA855 is a classic, voltage feedback operational amplifier (op amp) with two high-impedance inputs and a low-impedance output. Standard application circuits are supported, like the two basic options shown in 图 46 and 图 47.The resistor on the noninverting pin is used for bias current cancellation to minimize the output offset voltage. In a noninverting configuration the additional resistors on the noninverting pin add noise to the system so if SNR is critical, the resistor can be eliminated. In an inverting configuration the noninverting node is typically connected to a DC voltage, so the high-frequency noise contribution from the bias cancellation resistor can be bypassed by adding a large 1-µF capacitor in parallel to the resistor to shunt the noise. The DC operating point for each configuration is level-shifted by the reference voltage (V_{REF}), which is typically set to midsupply in single-supply operation. V_{REF} is typically connected to ground in split-supply applications.

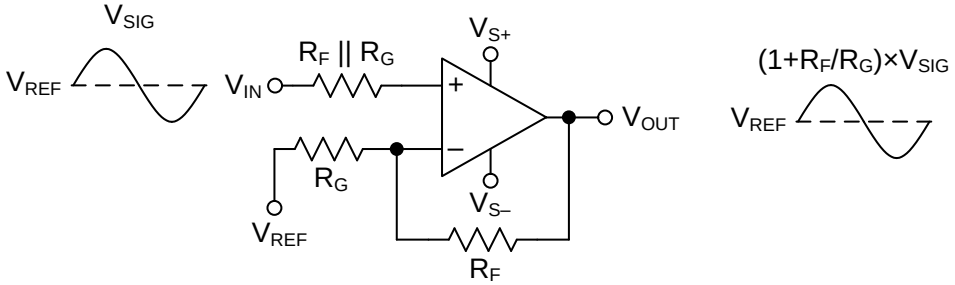

图 46. Noninverting Amplifier

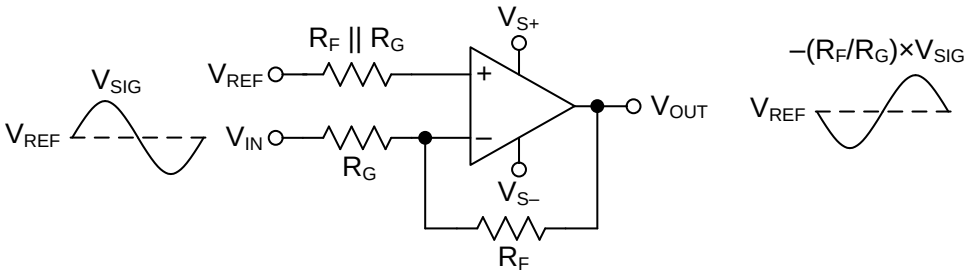

图 47. Inverting Amplifier

9.3 Feature Description

9.3.1 Input and ESD Protection

The OPA855 is fabricated on a low-voltage, high-speed, BiCMOS process. The internal, junction breakdown voltages are low for these small geometry devices, and as a result, all device pins are protected with internal ESD protection diodes to the power supplies as 图 48 shows. There are two antiparallel diodes between the inputs of the amplifier that clamp the inputs during an overrange or fault condition.

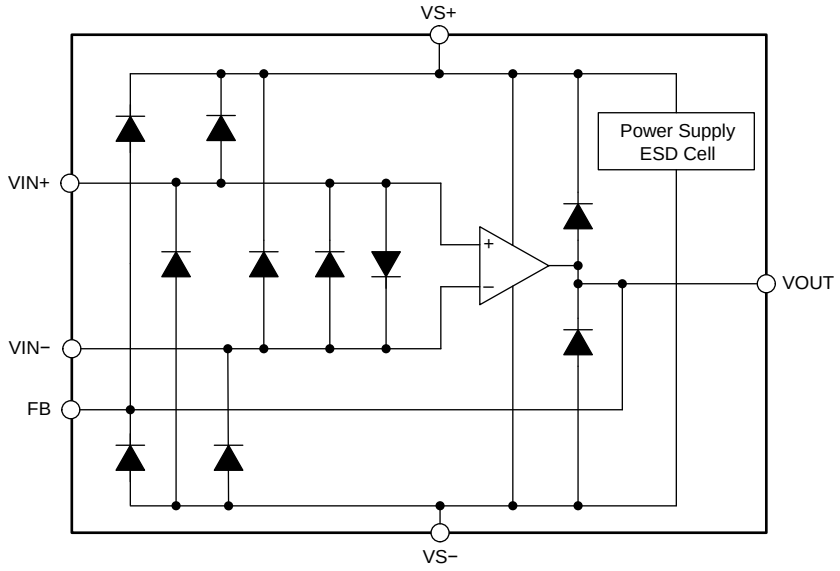

图 48. Internal ESD Structure

9.3.2 Feedback Pin

The OPA855 pin layout is optimized to minimize parasitic inductance and capacitance, which is critical in high-speed analog design. The FB pin (pin 1) is internally connected to the output of the amplifier. The FB pin is separated from the inverting input of the amplifier (pin 3) by a no connect (NC) pin (pin 2). The NC pin must be left floating. There are two advantages to this pin layout:

1. A feedback resistor (R_F) can connect between the FB and IN– pin on the same side of the package (see 图 49) rather than going around the package.
2. The isolation created by the NC pin minimizes the capacitive coupling between the FB and IN– pins by increasing the physical separation between the pins.

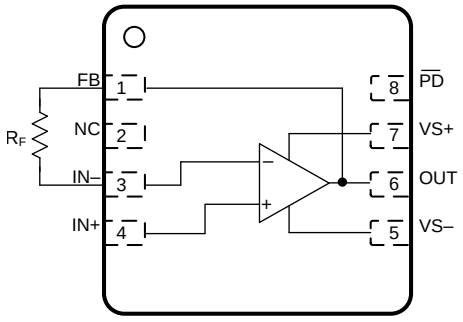

图 49. R_F Connection Between FB and IN– Pins

版权 © 2018, Texas Instruments Incorporated

Feature Description (接下页)

9.3.3 Wide Gain-Bandwidth Product

图 10 shows the open-loop magnitude and phase response of the OPA855. Calculate the gain bandwidth product of any op amp by determining the frequency at which the A_{OL} is 40 dB and multiplying that frequency by a factor of 100. The open-loop response shows the OPA855 to have approximately 62° of phase-margin in a noise gain of 7 V/V. The second pole in the A_{OL} response occurs before the magnitude crosses 0 dB, and the resultant phase margin is less than 0°. This indicates instability at a gain of 0 dB (1 V/V). Amplifiers that are not unity-gain stable are known as decompensated amplifiers. Decompensated amplifiers typically have higher gain-bandwidth product, higher slew rate, and lower voltage noise, compared to a unity-gain stable amplifier with the same amount of quiescent power consumption.

图 50 shows the open-loop magnitude (A_{OL}) of the OPA855 as a function of temperature. The results show approximately 5° of phase-margin variation over the entire temperature range in a noise gain of 7 V/V. Semiconductor process variation is the naturally occurring variation in the attributes of a transistor (Early-voltage, β, channel-length and width) and other passive elements (resistors and capacitors) when fabricated into an integrated circuit. The process variation can occur across devices on a single wafer, or, across devices over multiple wafer lots over time. Typically, the variation across a single wafer is tightly controlled. 图 51 shows the A_{OL} magnitude of the OPA855 as a function of process variation over time. The results show the A_{OL} curve for the nominal process corner and the variation one standard deviation from the nominal. The simulated results show less than 2° of phase-margin difference within a standard deviation of process variation in a noise gain of 7 V/V.

One of the primary applications for the OPA855 is as a high-speed transimpedance amplifier (TIA). The low-frequency noise gain of a TIA is 0 dB (1 V/V). At high frequencies the ratio of the total input capacitance and the feedback capacitance set the noise gain. To maximize the TIA closed-loop bandwidth, the feedback capacitance is typically smaller than the input capacitance, which implies that the high-frequency noise gain is greater than 0 dB. As a result, op amps configured as TIAs are not required to be unity-gain stable, which makes a decompensated amplifier a viable option for a TIA. *What You Need To Know About Transimpedance Amplifiers – Part 1* and *What You Need To Know About Transimpedance Amplifiers – Part 2* describe transimpedance amplifier compensation in greater detail.

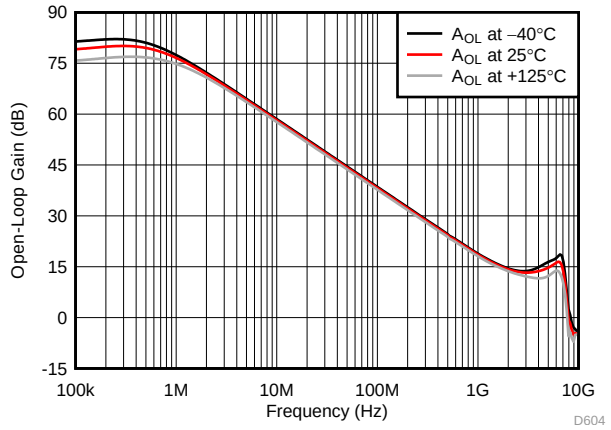

图 50. Open-Loop Gain vs Temperature

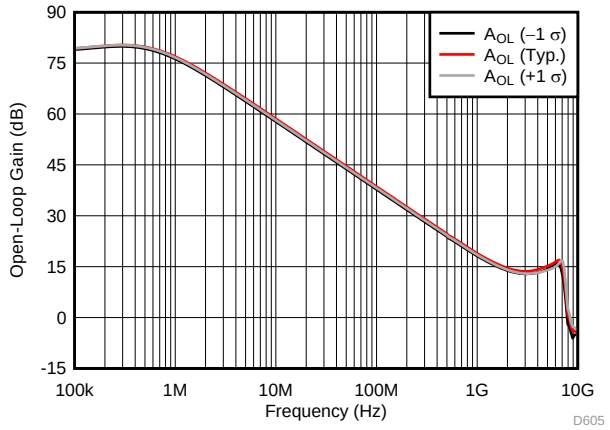

图 51. Open-Loop Gain vs Process Variation

Feature Description (接下页)

9.3.4 Slew Rate and Output Stage

In addition to wide bandwidth, the OPA855 features a high slew rate of 2750 V/µs. The slew rate is a critical parameter in high-speed pulse applications with narrow sub-10-ns pulses, such as optical time-domain reflectometry (OTDR) and LIDAR. The high slew rate of the OPA855 implies that the device accurately reproduces a 2-V, sub-ns pulse edge, as seen in 图 20. The wide bandwidth and slew rate of the OPA855 make it an excellent amplifier for high-speed signal-chain front ends.

图 52 shows the open-loop output impedance of the OPA855 as a function of frequency. To achieve high slew rates and low output impedance across frequency, the output swing of the OPA855 is limited to approximately 3 V. The OPA855 is typically used in conjunction with high-speed pipeline ADCs and flash ADCs that have limited input ranges. Therefore, the OPA855 output swing range coupled with the class-leading voltage noise specification maximizes the overall dynamic range of the signal chain.

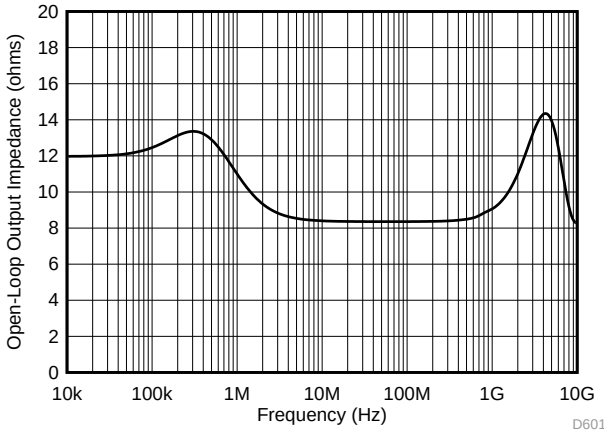

图 52. Open-Loop Output Impedance (Z_{OL}) vs Frequency

版权 © 2018, Texas Instruments Incorporated

9.4 Device Functional Modes

9.4.1 Split-Supply and Single-Supply Operation

The OPA855 can be configured with single-sided supplies or split-supplies as shown in 图 58. Split-supply operation using balanced supplies with the input common-mode set to ground eases lab testing because most signal generators, network analyzers, spectrum analyzers, and other lab equipment typically reference inputs and outputs to ground. Split-supply operation is preferred in systems where the signals swing around ground. However, the system requires two supply rails. In split-supply operation, the thermal pad must be connected to the negative supply.

Newer systems use a single power supply to improve efficiency and reduce the cost of the extra power supply. The OPA855 can be used with a single positive supply (negative supply at ground) with no change in performance if the input common-mode and output swing are biased within the linear operation of the device. In single-supply operation, level shift the dc input and output reference voltages by half the difference between the power supply rails. This configuration maintains the input common-mode and output load reference at midsupply. To eliminate gain errors, the source driving the reference input common-mode voltage must have low output impedance across the frequency range of interest . In this case, the thermal pad must be connected to ground.

9.4.2 Power-Down Mode

The OPA855 features a power-down mode to reduce the quiescent current to conserve power. 图 23 and 图 24 show the transient response of the OPA855 as the $\overline{PD}$ pin toggles between the disabled and enabled states.

The $\overline{PD}$ disable and enable threshold voltages are with reference to the negative supply. If the amplifier is configured with the positive supply at 3.3 V and the negative supply at ground, then the disable and enable threshold voltages are 0.65 V and 1.8 V, respectively. If the amplifier is configured with ±1.65-V supplies, then the disable and enable threshold voltages are at –1 V and 0.15 V, respectively. If the amplifier is configured with ±2.5-V supplies, then the threshold voltages are at –1.85 V and –0.7 V.

图 53 shows the switching behavior of a typical amplifier as the $\overline{PD}$ pin is swept down from the enabled state to the disabled state. Similarly, 图 54 shows the switching behavior of a typical amplifier as the $\overline{PD}$ pin is swept up from the disabled state to the enabled state. The small difference in the switching thresholds between the down sweep and the up sweep is caused by the hysteresis designed into the amplifier to increase immunity to noise on the $\overline{PD}$ pin.

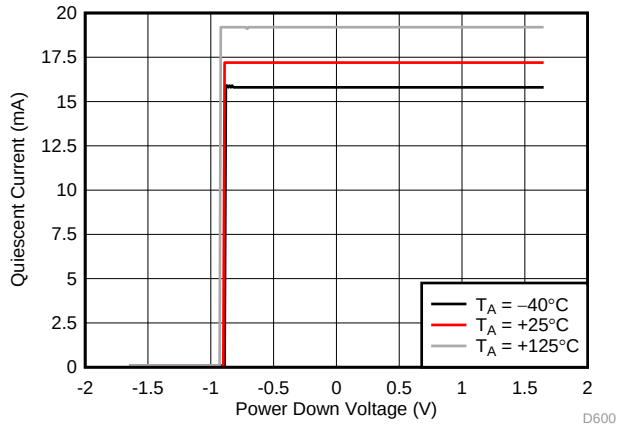

图 53. Switching Threshold ($\overline{PD}$ Pin Swept from High to Low)

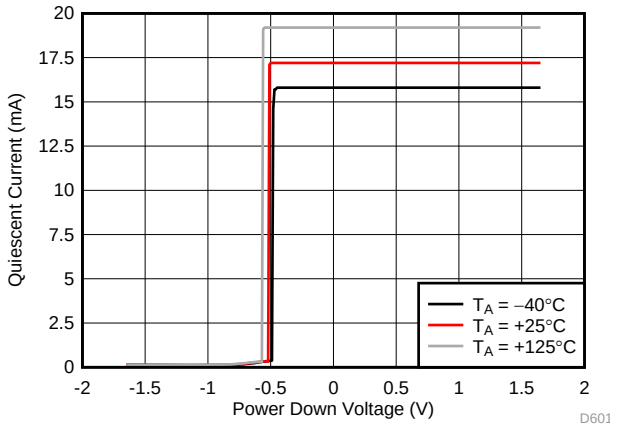

图 54. Switching Threshold ($\overline{PD}$ Pin Swept from Low to High)

Connecting the $\overline{PD}$ pin low disables the amplifier and places the output in a high-impedance state. When the amplifier is configured as a noninverting amplifier, the feedback (R_F) and gain (R_G) resistor network form a parallel load to the output of the amplifier. To protect the input stage of the amplifier, the OPA855 uses internal, back-to-back protection diodes between the inverting and noninverting input pins as 图 48 shows. In the power-down state, if the differential voltage between the input pins of the amplifier exceeds a diode voltage drop, an additional low-impedance path is created between the noninverting input pin and the output pin.

版权 © 2018, Texas Instruments Incorporated

10 Application and Implementation

注

Information in the following applications sections is not part of the TI component specification, and TI does not warrant its accuracy or completeness. TI's customers are responsible for determining suitability of components for their purposes. Customers should validate and test their design implementation to confirm system functionality.

10.1 Application Information

The OPA855 offers very high-bandwidth, high slew-rate, low noise, and better than –60 dBc of distortion performance at frequencies of up to 100 MHz. These features make this device an excellent low-noise amplifier in high-speed data acquisition systems.

版权 © 2018, Texas Instruments Incorporated

10.2 Typical Application

图 55 shows the OPA855 configured as a transimpedance amplifier (U1) in a wide-bandwidth, optical front-end system. A second amplifier, the OPA859, configured as a unity-gain buffer (U2) sets a dc offset voltage to the THS4520. The THS4520 is used to convert the single-ended transimpedance output of the OPA855 into a differential output signal. The THS4520 drives the input of the ADS54J64, 14-bit, 1-GSPS analog-to-digital converter (ADC) that digitizes the analog signal.

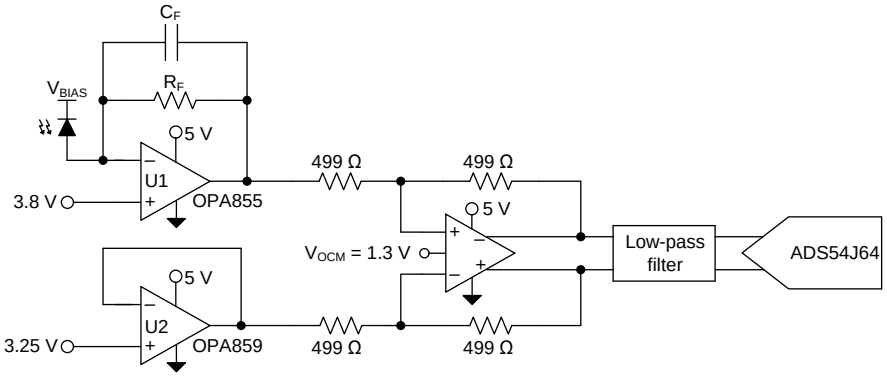

图 55. OPA855 as a TIA in an Optical Front-End System

10.2.1 Design Requirements

The objective is to design a low noise, wideband optical front-end system using the OPA855 as a transimpedance amplifier. The design requirements are:

- Amplifier supply voltage: 5 V
- TIA common-mode voltage: 3.8 V
- THS4520 gain: 1 V/V
- ADC input common-mode voltage: 1.3 V
- ADC analog differential input range: 1.1 V_{PP}

10.2.2 Detailed Design Procedure

The closed-loop bandwidth of a transimpedance amplifier is a function of the following:

1. The total input capacitance (C_{IN}). This total includes the photodiode capacitance, the input capacitance of the amplifier (common-mode and differential capacitance) and any stray capacitance from the PCB.
2. The op amp gain bandwidth product (GBWP).
3. The transimpedance gain (R_F).

图 55 shows the OPA855 configured as a TIA, with the avalanche photodiode (APD) reverse biased so that the APD cathode is tied to a large positive bias voltage. In this configuration, the APD sources current into the op amp feedback loop so that the output swings in a negative direction relative to the input common-mode voltage. To maximize the output swing in the negative direction, the OPA855 common-mode voltage is set close to the positive limit; only 1.2 V from the positive supply rail. The feedback resistance (R_F) and the input capacitance (C_{IN}) form a zero in the noise gain that results in instability if left unchecked. To counteract the effect of the zero, a pole is inserted into the noise gain transfer function by adding the feedback capacitor (C_F).

The *Transimpedance Considerations for High-Speed Amplifiers Application Report* discusses theories and equations that show how to compensate a transimpedance amplifier for a particular transimpedance gain and input capacitance. The bandwidth and compensation equations from the application report are available in an Excel™ calculator. *What You Need To Know About Transimpedance Amplifiers – Part 1* provides a link to the calculator.

版权 © 2018, Texas Instruments Incorporated

Typical Application (接下页)

The equations and calculators in the referenced application report and blog posts are used to model the bandwidth (f_{-3dB}) and noise (I_{RN}) performance of the OPA855 configured as a TIA. The resultant performance is shown in 图 56 and 图 57. The left-side Y-axis shows the closed-loop bandwidth performance, whereas the right side of the graph shows the integrated input-referred noise. The noise bandwidth to calculate I_{RN} for a fixed R_F and C_{PD} is set equal to the f_{-3dB} frequency. 图 56 shows the amplifier performance as a function of photodiode capacitance (C_{PD}) for R_F = 6 kΩ and 12 kΩ. Increasing C_{PD} decreases the closed-loop bandwidth. To maximize bandwidth, make sure to reduce any stray parasitic capacitance from the PCB. The OPA855 is designed with 0.8 pF of total input capacitance to minimize the effect of stray capacitance on system performance. 图 57 shows the amplifier performance as a function of R_F for C_{PD} = 1.5 pF and 2.5 pF. Increasing R_F results in lower bandwidth. To maximize the signal-to-noise ratio (SNR) in an optical front-end system, maximize the gain in the TIA stage. Increasing R_F by a factor of X increases the signal level by X, but only increases the resistor noise contribution by $\sqrt{X}$, thereby improving SNR. Since the OPA855 is a bipolar input amplifier, increasing the feedback resistance increases the voltage offset due to the bias current and also increases the total output noise due to increased noise contributions from the amplifiers current noise.

The OPA859 configured as a unity-gain buffer drives a dc offset voltage of 3.25 V into the lower half of the THS4520. To maximize the dynamic range of the ADC, the OPA855 and OPA859 drive a differential common-mode of 3.8 V and 3.25 V respectively into the THS4520. The dc offset voltage of the buffer amplifier can be derived using 公式 1.

$$V_{BUF_DC} = V_{TIA_CM} - \left(\frac{1}{2} \times \frac{V_{ADC_DIFF_IN}}{\left(\frac{R_F}{R_G} \right)} \right) \quad (1)$$

where

- V_{TIA_CM} is the common-mode voltage of the TIA (3.8 V)
- $V_{ADC_DIFF_IN}$ is the differential input voltage range of the ADC (1.1 V_{PP})
- R_F and R_G are the feedback resistance (499 Ω) and gain resistance (499 Ω) of the THS4520 differential amplifier

The low-pass filter between the THS4520 and the ADC54J64 minimizes high-frequency noise and maximizes SNR. The ADC54J64 has an internal buffer that isolates the output of the THS4520 from the ADC sampling-capacitor input, so a traditional charge bucket filter is not required.

10.2.3 Application Curves

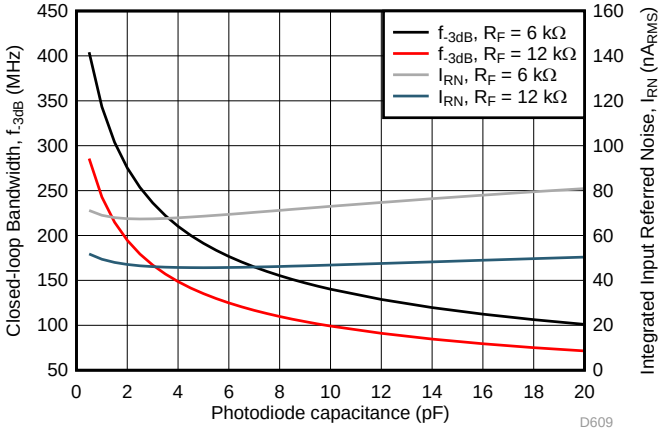

图 56. Bandwidth and Noise vs Photodiode Capacitance

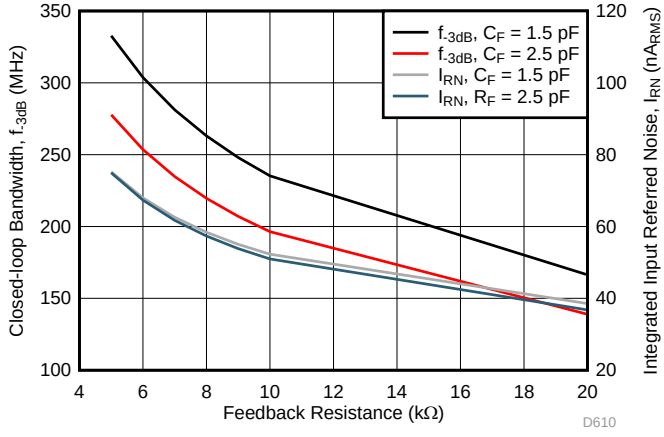

图 57. Bandwidth and Noise vs Feedback Resistance

版权 © 2018, Texas Instruments Incorporated

11 Power Supply Recommendations

The OPA855 operates on supplies from 3.3 V to 5.25 V. The OPA855 operates on single-sided supplies, split and balanced bipolar supplies, and unbalanced bipolar supplies. Because the OPA855 does not feature rail-to-rail inputs or outputs, the input common-mode and output swing ranges are limited at 3.3-V supplies.

a) Single supply configuration

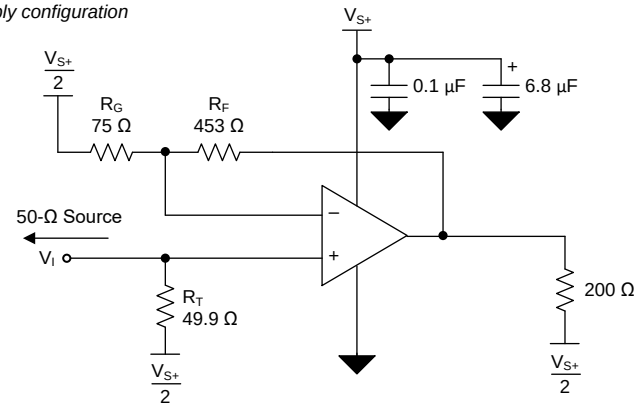

b) Split supply configuration

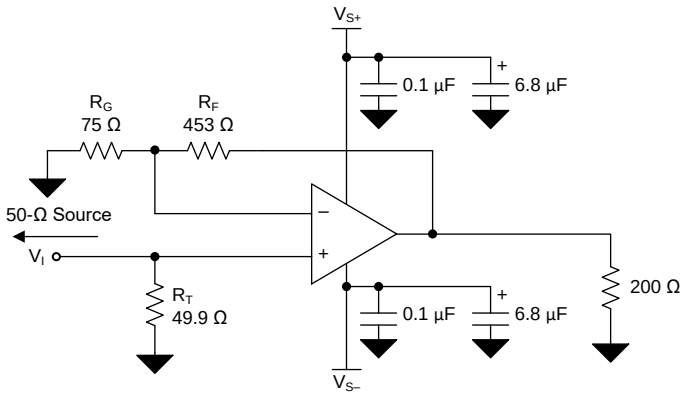

图 58. Split and Single Supply Circuit Configuration

12 Layout

12.1 Layout Guidelines

Achieving optimum performance with a high-frequency amplifier like the OPA855 requires careful attention to board layout parasitics and external component types. Recommendations that optimize performance include:

- **Minimize parasitic capacitance from the signal I/O pins to ac ground.** Parasitic capacitance on the output and inverting input pins can cause instability. To reduce unwanted capacitance, cut out the power and ground traces under the signal input and output pins. Otherwise, ground and power planes must be unbroken elsewhere on the board. When configuring the amplifier as a TIA, if the required feedback capacitor is less than 0.15 pF, consider using two series resistors, each of half the value of a single resistor in the feedback loop to minimize the parasitic capacitance from the resistor.
- **Minimize the distance (less than 0.25") from the power-supply pins to high-frequency bypass capacitors.** Use high-quality, 100-pF to 0.1-µF, C0G and NPO-type decoupling capacitors with voltage ratings at least three times greater than the amplifiers maximum power supplies. This configuration makes sure that there is a low-impedance path to the amplifiers power-supply pins across the amplifiers gain bandwidth specification. At the device pins, do not allow the ground and power plane layout to be in close proximity to the signal I/O pins. Avoid narrow power and ground traces to minimize inductance between the pins and the decoupling capacitors. The power-supply connections must always be decoupled with these capacitors. Larger (2.2-µF to 6.8-µF) decoupling capacitors that are effective at lower frequency must be used on the supply pins. Place these decoupling capacitors further from the device. Share the decoupling capacitors among several devices in the same area of the printed circuit board (PCB).
- **Careful selection and placement of external components preserves the high-frequency performance of the OPA855.** Use low-reactance resistors. Surface-mount resistors work best and allow a tighter overall layout. Never use wirewound resistors in a high-frequency application. Because the output pin and inverting input pin are the most sensitive to parasitic capacitance, always position the feedback and series output resistor, if any, as close to the output pin as possible. Place other network components (such as noninverting input termination resistors) close to the package. Even with a low parasitic capacitance shunting the external resistors, high resistor values create significant time constants that can degrade performance. When configuring the OPA855 as a voltage amplifier, keep resistor values as low as possible and consistent with load driving considerations. Decreasing the resistor values keeps the resistor noise terms low and minimizes the effect of the parasitic capacitance. However, lower resistor values increase the dynamic power consumption because R_F and R_G become part of the output load network of the amplifier.

12.2 Layout Example

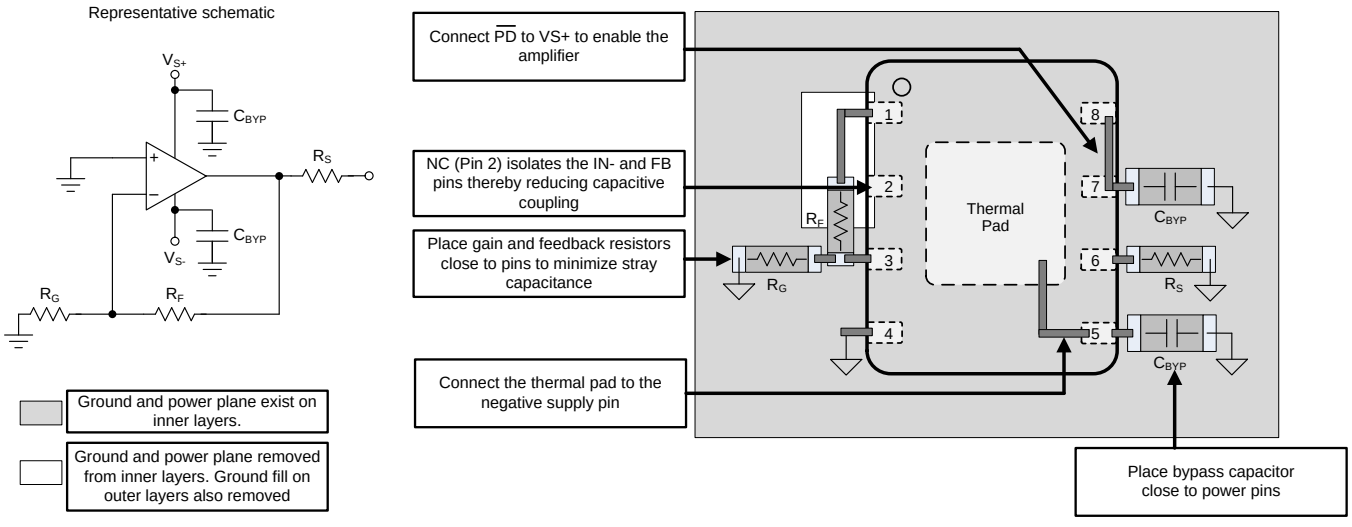

图 59. Layout Recommendation

版权 © 2018, Texas Instruments Incorporated

Layout Example (接下页)

When configuring the OPA855 as a transimpedance amplifier additional care must be taken to minimize the inductance between the avalanche photodiode (APD) and the amplifier. Always place the photodiode on the same side of the PCB as the amplifier. Placing the amplifier and the APD on opposite sides of the PCB increases the parasitic effects due to via inductance. APD packaging can be quite large which often requires the APD to be placed further away from the amplifier than ideal. The added distance between the two device results in increased inductance between the APD and op amp feedback network as shown in 图 60. The added inductance is detrimental to a decompensated amplifiers stability since it isolates the APD capacitance from the noise gain transfer function. The noise gain is given by 公式 2. The added PCB trace inductance between the feedback network increases the denominator in 公式 2 thereby reducing the noise gain and the phase margin. In cases where a leaded APD in a TO can is used inductance should be further minimized by cutting the leads of the TO can as short as possible.

The layout shown in 图 60 can be improved by following some of the guidelines shown in 图 61. The two key rules to follow are:

- Add an isolation resistor R_{ISO} as close as possible to the inverting input of the amplifier. Select the value of R_{ISO} to be between 10 Ω and 20 Ω. The resistor dampens the potential resonance caused by the trace inductance and the amplifiers internal capacitance.
- Close the loop between the feedback elements (R_F and C_F) and R_{ISO} as close to the APD pins as possible. This ensures a more balanced layout and reduces the inductive isolation between the APD and the feedback network.

$$\text{Noise Gain} = \left(1 + \frac{Z_F}{Z_{IN}}\right) \quad (2)$$

where

- Z_F is the total impedance of the feedback network.
- Z_{IN} is the total impedance of the input network.

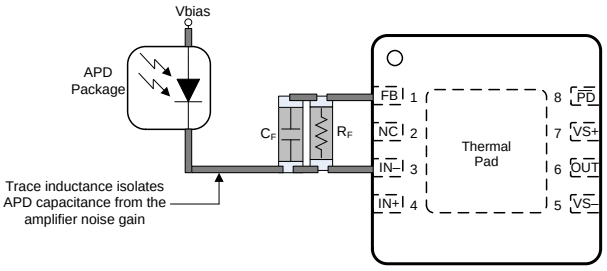

图 60. Non-Ideal TIA Layout

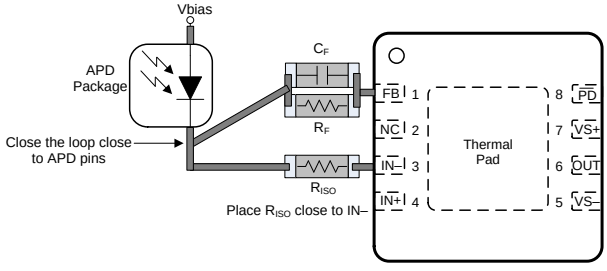

图 61. Improved TIA Layout

13 器件和文档支持

13.1 器件支持

13.1.1 开发支持

- *宽带宽光学前端参考设计*
- *使用高速数据转换器的激光雷达脉冲飞行时间参考设计*
- *激光雷达脉冲飞行时间参考设计*

13.2 文档支持

13.2.1 相关文档

请参阅如下相关文档：

- *《OPA855EVM 用户指南》*
- *《高速运算放大器跨阻注意事项应用报告》*
- *《跨阻放大器须知 – 第 1 部分》*
- *《跨阻放大器须知 – 第 2 部分》*
- *培训视频：如何设计跨阻放大器电路*
- *培训视频：高速跨阻放大器设计流程*
- *培训视频：如何将 TINA-TI 模型转换为通用 SPICE 模型*

13.3 接收文档更新通知

要接收文档更新通知，请导航至 TI.com.cn 上的器件产品文件夹。单击右上角的*通知我* 进行注册，即可每周接收产品信息更改摘要。有关更改的详细信息，请查看任何已修订文档中包含的修订历史记录。

13.4 社区资源

下列链接提供到 TI 社区资源的连接。链接的内容由各个分销商“按照原样”提供。这些内容并不构成 TI 技术规范，并且不一定反映 TI 的观点；请参阅 TI 的 《使用条款》。

TI E2E™ 在线社区 ***TI 的工程师对工程师 (E2E) 社区。*** **此社区的创建目的在于促进工程师之间的协作。在 e2e.ti.com 中，您可以咨询问题、分享知识、拓展思路并与同行工程师一道帮助解决问题。**

设计支持 ***TI 参考设计支持*** **可帮助您快速查找有帮助的 E2E 论坛、设计支持工具以及技术支持的联系信息。**

13.5 商标

E2E is a trademark of Texas Instruments.
Excel is a trademark of Microsoft Corporation.
All other trademarks are the property of their respective owners.

13.6 静电放电警告

ESD 可能会损坏该集成电路。德州仪器 (TI) 建议通过适当的预防措施处理所有集成电路。如果不遵守正确的处理措施和安装程序，可能会损坏集成电路。

ESD 的损坏小至导致微小的性能降级，大至整个器件故障。 精密的集成电路可能更容易受到损坏，这是因为非常细微的参数更改都可能会导致器件与其发布的规格不相符。

13.7 术语表

SLYZ022 — *TI 术语表*。

这份术语表列出并解释术语、缩写和定义。

14 机械、封装和可订购信息

以下页面包含机械、封装和可订购信息。这些信息是指定器件的最新可用数据。数据如有变更，恕不另行通知，且不会对此文档进行修订。如需获取此数据表的浏览器版本，请查阅左侧的导航栏。

版权 © 2018, Texas Instruments Incorporated

重要声明和免责声明

TI 均以“原样”提供技术性及可靠性数据（包括数据表）、设计资源（包括参考设计）、应用或其他设计建议、网络工具、安全信息和其他资源，不保证其中不含任何瑕疵，且不做任何明示或暗示的担保，包括但不限于对适销性、适合某特定用途或不侵犯任何第三方知识产权的暗示担保。

所述资源可供专业开发人员应用TI 产品进行设计使用。您将对以下行为独自承担全部责任：(1) 针对您的应用选择合适的TI 产品；(2) 设计、验证并测试您的应用；(3) 确保您的应用满足相应标准以及任何其他安全、安保或其他要求。所述资源如有变更，恕不另行通知。TI 对您使用所述资源的授权仅限于开发资源所涉及TI 产品的相关应用。除此之外不得复制或展示所述资源，也不提供其它TI或任何第三方的知识产权授权许可。如因使用所述资源而产生任何索赔、赔偿、成本、损失及债务等，TI对此概不负责，并且您须赔偿由此对TI 及其代表造成的损害。

TI 所提供产品均受TI 的销售条款 (http://www.ti.com.cn/zh-cn/legal/termsofsale.html) 以及ti.com.cn上或随附TI产品提供的其他可适用条款的约束。TI提供所述资源并不扩展或以其他方式更改TI 针对TI 产品所发布的可适用的担保范围或担保免责声明。

邮寄地址：上海市浦东新区世纪大道 1568 号中建大厦 32 楼，邮政编码：200122
Copyright © 2018 德州仪器半导体技术（上海）有限公司

PACKAGING INFORMATION

Orderable Device	Status (1)	Package Type	Package Drawing	Pins	Package Qty	Eco Plan (2)	Lead/Ball Finish (6)	MSL Peak Temp (3)	Op Temp (°C)	Device Marking (4/5)	Samples
OPA855IDSGR	ACTIVE	WSON	DSG	8	3000	Green (RoHS & no Sb/Br)	CU NIPDAU	Level-2-260C-1 YEAR	-40 to 125	855	Samples
OPA855IDSGT	ACTIVE	WSON	DSG	8	250	Green (RoHS & no Sb/Br)	CU NIPDAU	Level-2-260C-1 YEAR	-40 to 125	855	Samples

(1) The marketing status values are defined as follows:
ACTIVE: Product device recommended for new designs.
LIFEBUY: TI has announced that the device will be discontinued, and a lifetime-buy period is in effect.
NRND: Not recommended for new designs. Device is in production to support existing customers, but TI does not recommend using this part in a new design.
PREVIEW: Device has been announced but is not in production. Samples may or may not be available.
OBSOLETE: TI has discontinued the production of the device.

(2) **RoHS:** TI defines "RoHS" to mean semiconductor products that are compliant with the current EU RoHS requirements for all 10 RoHS substances, including the requirement that RoHS substance do not exceed 0.1% by weight in homogeneous materials. Where designed to be soldered at high temperatures, "RoHS" products are suitable for use in specified lead-free processes. TI may reference these types of products as "Pb-Free".
RoHS Exempt: TI defines "RoHS Exempt" to mean products that contain lead but are compliant with EU RoHS pursuant to a specific EU RoHS exemption.
Green: TI defines "Green" to mean the content of Chlorine (Cl) and Bromine (Br) based flame retardants meet JS709B low halogen requirements of <=1000ppm threshold. Antimony trioxide based flame retardants must also meet the <=1000ppm threshold requirement.

(3) MSL, Peak Temp. - The Moisture Sensitivity Level rating according to the JEDEC industry standard classifications, and peak solder temperature.

(4) There may be additional marking, which relates to the logo, the lot trace code information, or the environmental category on the device.

(5) Multiple Device Markings will be inside parentheses. Only one Device Marking contained in parentheses and separated by a "~" will appear on a device. If a line is indented then it is a continuation of the previous line and the two combined represent the entire Device Marking for that device.

(6) Lead/Ball Finish - Orderable Devices may have multiple material finish options. Finish options are separated by a vertical ruled line. Lead/Ball Finish values may wrap to two lines if the finish value exceeds the maximum column width.

Important Information and Disclaimer: The information provided on this page represents TI's knowledge and belief as of the date that it is provided. TI bases its knowledge and belief on information provided by third parties, and makes no representation or warranty as to the accuracy of such information. Efforts are underway to better integrate information from third parties. TI has taken and continues to take reasonable steps to provide representative and accurate information but may not have conducted destructive testing or chemical analysis on incoming materials and chemicals. TI and TI suppliers consider certain information to be proprietary, and thus CAS numbers and other limited information may not be available for release.

In no event shall TI's liability arising out of such information exceed the total purchase price of the TI part(s) at issue in this document sold by TI to Customer on an annual basis.

TAPE AND REEL INFORMATION

REEL DIMENSIONS

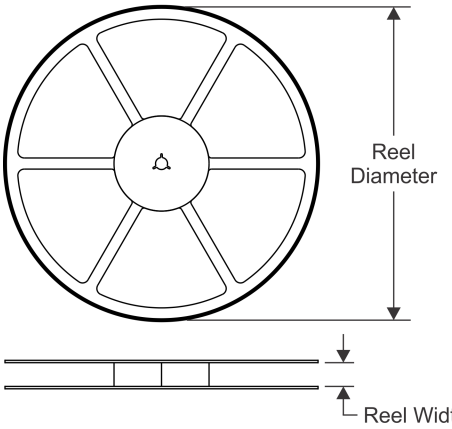

TAPE DIMENSIONS

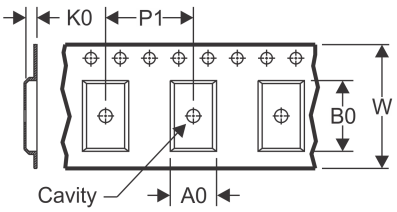

A0	Dimension designed to accommodate the component width
B0	Dimension designed to accommodate the component length
K0	Dimension designed to accommodate the component thickness
W	Overall width of the carrier tape
P1	Pitch between successive cavity centers

QUADRANT ASSIGNMENTS FOR PIN 1 ORIENTATION IN TAPE

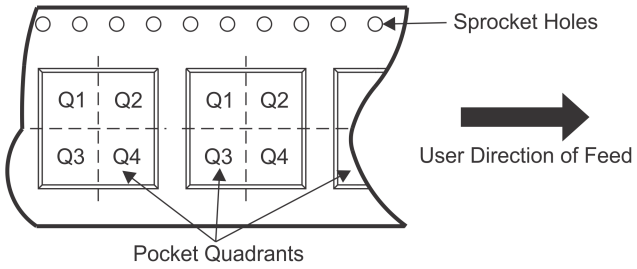

*All dimensions are nominal

Device	Package Type	Package Drawing	Pins	SPQ	Reel Diameter (mm)	Reel Width W1 (mm)	A0 (mm)	B0 (mm)	K0 (mm)	P1 (mm)	W (mm)	Pin1 Quadrant
OPA855IDSGR	WSON	DSG	8	3000	180.0	8.4	2.3	2.3	1.15	4.0	8.0	Q2
OPA855IDSGT	WSON	DSG	8	250	180.0	8.4	2.3	2.3	1.15	4.0	8.0	Q2

TAPE AND REEL BOX DIMENSIONS

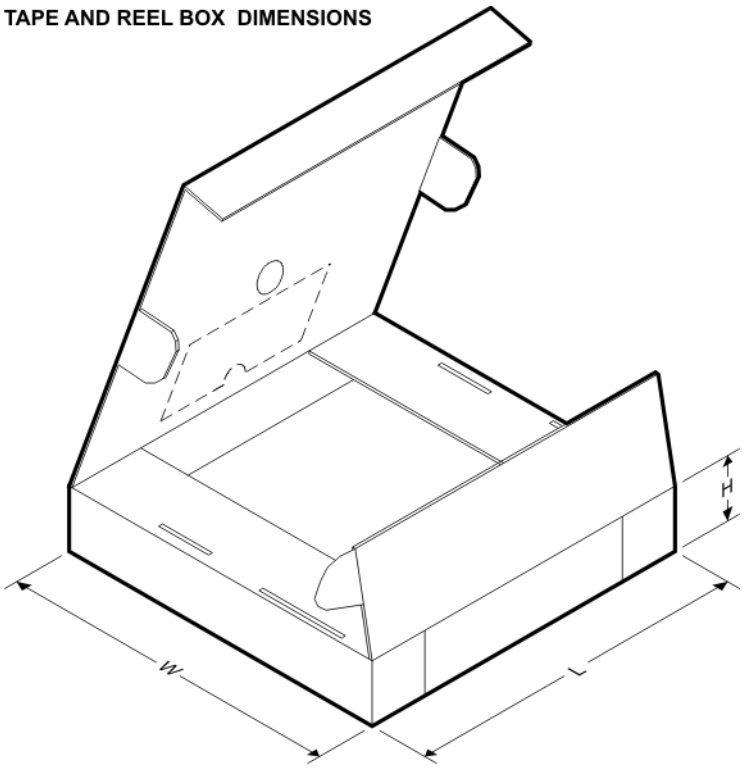

*All dimensions are nominal

Device	Package Type	Package Drawing	Pins	SPQ	Length (mm)	Width (mm)	Height (mm)
OPA855IDSGR	WSON	DSG	8	3000	210.0	185.0	35.0
OPA855IDSGT	WSON	DSG	8	250	210.0	185.0	35.0

GENERIC PACKAGE VIEW

DSG 8

WSON - 0.8 mm max height

2 x 2, 0.5 mm pitch

PLASTIC SMALL OUTLINE - NO LEAD

This image is a representation of the package family, actual package may vary.
Refer to the product data sheet for package details.

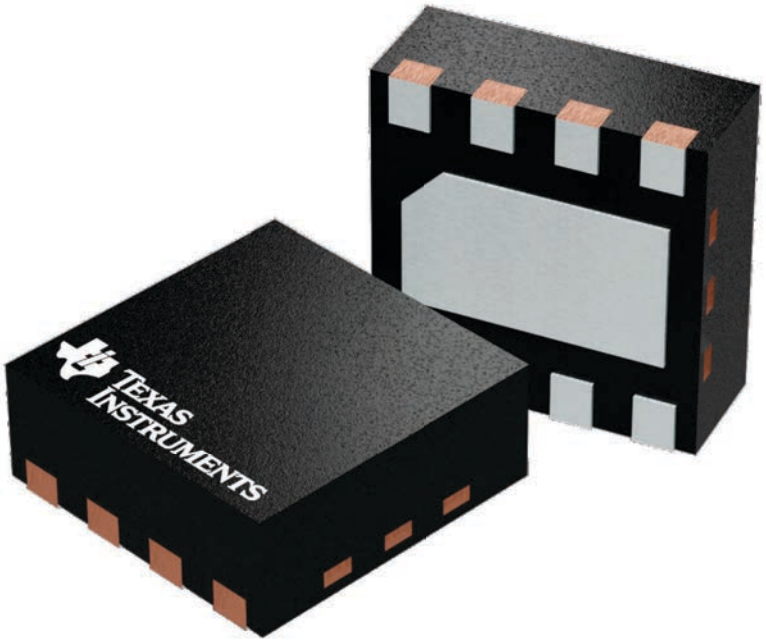

4224783/A

PACKAGE OUTLINE

DSG0008A

WSON - 0.8 mm max height

PLASTIC SMALL OUTLINE - NO LEAD

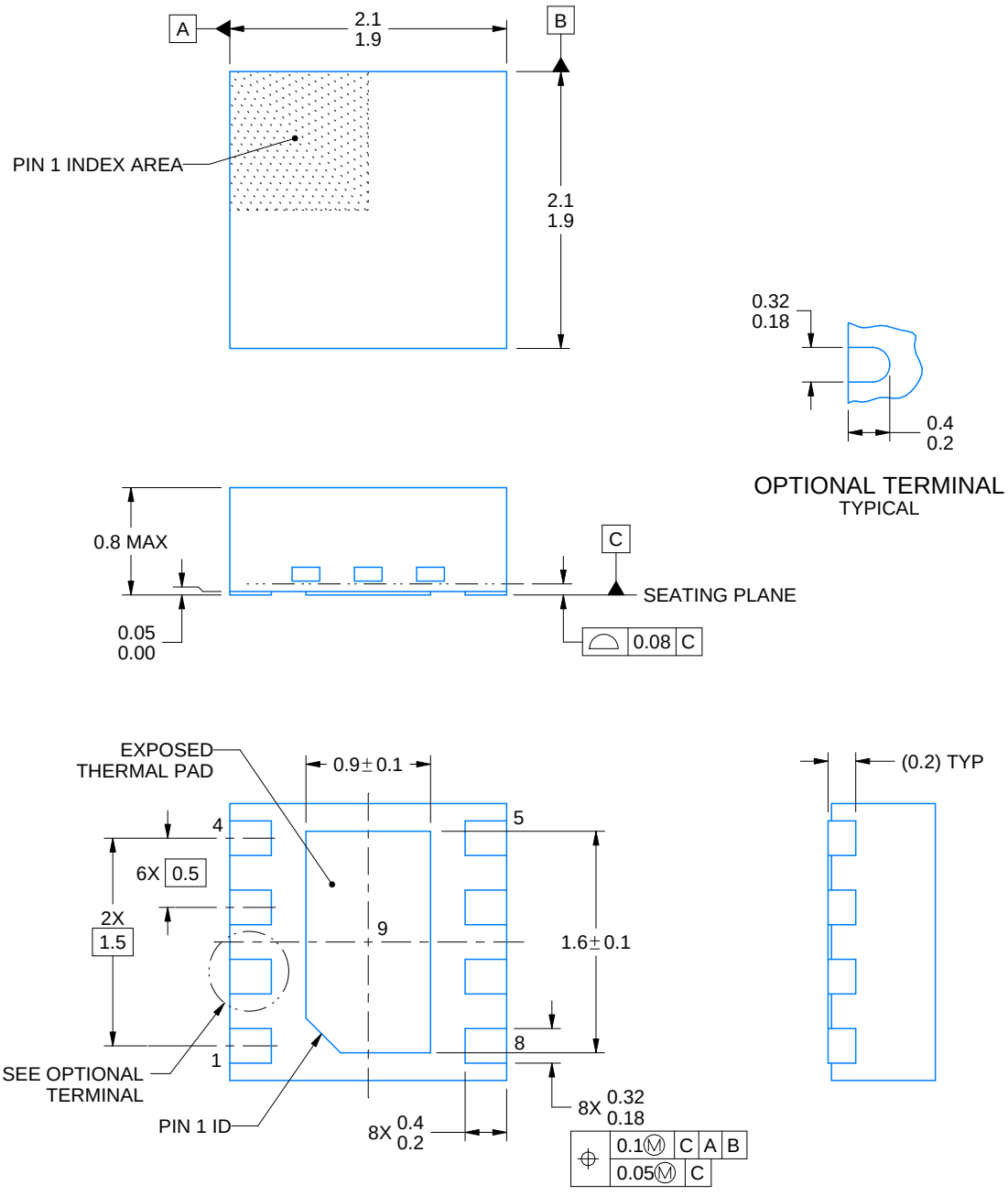

NOTES:

1. All linear dimensions are in millimeters. Any dimensions in parenthesis are for reference only. Dimensioning and tolerancing per ASME Y14.5M.
2. This drawing is subject to change without notice.
3. The package thermal pad must be soldered to the printed circuit board for thermal and mechanical performance.

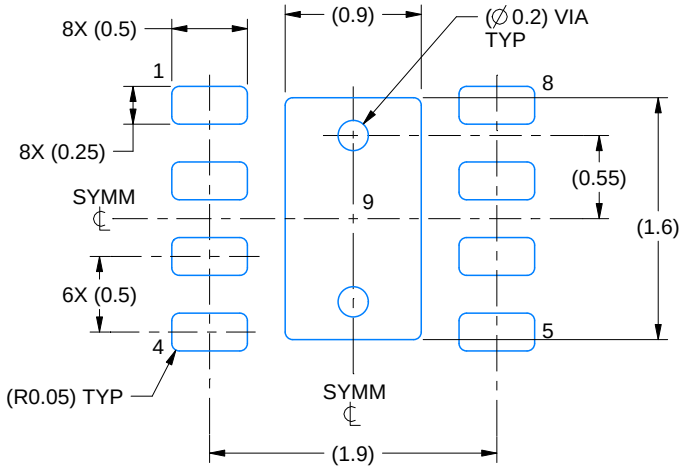

LAND PATTERN EXAMPLE
SCALE:20X

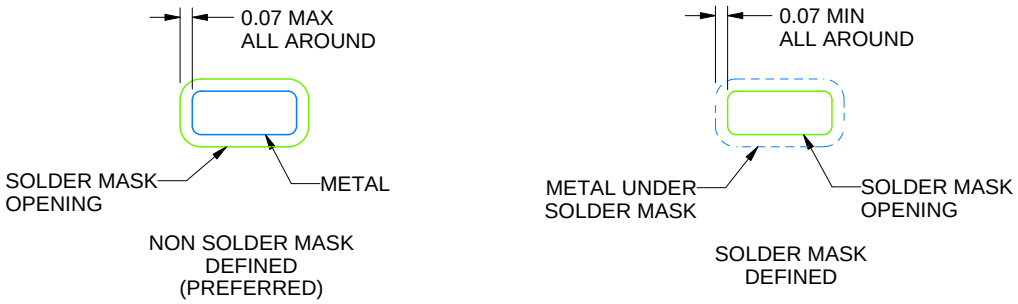

SOLDER MASK DETAILS

4218900/C 04/2019

NOTES: (continued)

4. This package is designed to be soldered to a thermal pad on the board. For more information, see Texas Instruments literature number SLUA271 (www.ti.com/lit/slua271).
5. Vias are optional depending on application, refer to device data sheet. If any vias are implemented, refer to their locations shown on this view. It is recommended that vias under paste be filled, plugged or tented.

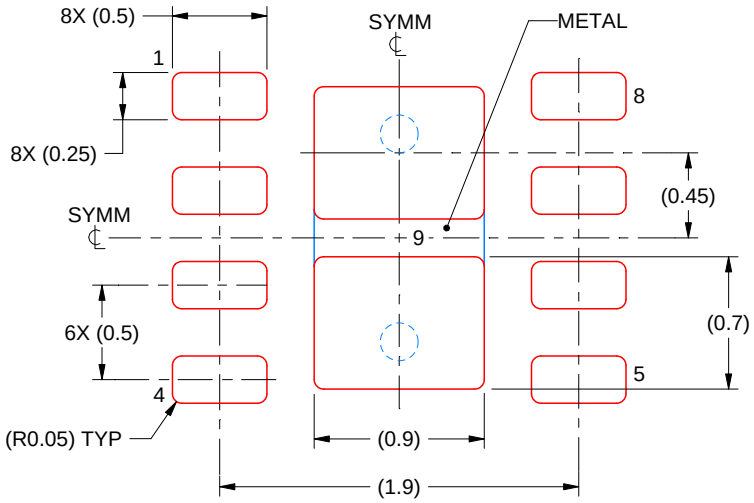

SOLDER PASTE EXAMPLE
BASED ON 0.125 mm THICK STENCIL

EXPOSED PAD 9:
87% PRINTED SOLDER COVERAGE BY AREA UNDER PACKAGE
SCALE:25X

4218900/C 04/2019

NOTES: (continued)

6. Laser cutting apertures with trapezoidal walls and rounded corners may offer better paste release. IPC-7525 may have alternate design recommendations.

重要声明和免责声明

TI 均以“原样”提供技术性及可靠性数据（包括数据表）、设计资源（包括参考设计）、应用或其他设计建议、网络工具、安全信息和其他资源，不保证其中不含任何瑕疵，且不做任何明示或暗示的担保，包括但不限于对适销性、适合某特定用途或不侵犯任何第三方知识产权的暗示担保。

所述资源可供专业开发人员应用TI 产品进行设计使用。您将对以下行为独自承担全部责任：(1) 针对您的应用选择合适的TI 产品；(2) 设计、验证并测试您的应用；(3) 确保您的应用满足相应标准以及任何其他安全、安保或其他要求。所述资源如有变更，恕不另行通知。TI 对您使用所述资源的授权仅限于开发资源所涉及TI 产品的相关应用。除此之外不得复制或展示所述资源，也不提供其它TI或任何第三方的知识产权授权许可。如因使用所述资源而产生任何索赔、赔偿、成本、损失及债务等，TI对此概不负责，并且您须赔偿由此对TI 及其代表造成的损害。

TI 所提供产品均受TI 的销售条款 (http://www.ti.com.cn/zh-cn/legal/termsofsale.html) 以及ti.com.cn上或随附TI产品提供的其他可适用条款的约束。TI提供所述资源并不扩展或以其他方式更改TI 针对TI 产品所发布的可适用的担保范围或担保免责声明。

邮寄地址：上海市浦东新区世纪大道 1568 号中建大厦 32 楼，邮政编码：200122
Copyright © 2019 德州仪器半导体技术（上海）有限公司