ALM2402-Q1 具有高电流输出的双路运算放大器

1 特性

- 高输出电流驱动能力：400mA 持续电流（每通道）
  - 替换分立式电源升压缓冲器的运算放大器
- 两类电源均具有宽电源范围（高达 16V）
- 过热关断
- 电流限制
- 针对低静态电流应用的关断引脚
- 与高容值容性负载（高达 3µF）搭配使用时可保持稳定
- 零交叉失真
- 符合汽车应用要求
- 具有符合 AEC-Q100 的下列结果：
  - 器件温度 1 级：-40°C 至 125°C 的环境运行温度范围
  - 器件人体模型 (HBM) 分类等级 H2
  - 器件充电器件模型 (CDM) 分类等级 C5
- 低偏移电压：1mV（典型值）
- 内部射频 (RF)/电磁干扰 (EMI) 滤波器
- 采用带散热焊盘的 3mm x 3mm 12 引脚晶圆级小外形无引线 (WSON) (DRR) 封装

2 应用

- 高容值容性负载
  - 电缆护套
  - 参考缓冲器
  - 功率 FET/IGBT 栅极
  - 超级电容
- 跟踪 LDO
- 感性负载
  - 旋转变压器
  - 双极直流与伺服电机
  - 螺线管与阀门

3 说明

ALM2402-Q1 是一款具有保护功能的双路高电压、高电流运算放大器，非常适合用于驱动低阻抗和/或高等效串联电阻 (ESR) 的容性负载。 ALM2402-Q1 由 5.0V 至 16V 范围内的单电源或分离电源供电运行，可提供高达 400mA 的直流输出。

每个运算放大器均具有过热标志以及过热关断功能。该器件还为每个输出级提供了独立的电源引脚，允许用户对输出施加较低电压以限制 Voh，从而限制片上功耗。

ALM2402 提供有 12 引脚无引线 DRR 封装和 14 引脚带引线散热薄型小外形尺寸 (HTSSOP) 封装（预览）。 这两种封装均包含导热焊盘，有助于散热。 而且这两种封装的热阻均非常低，能够以最低的芯片温升实现最佳电流驱动能力， 从而使客户在恶劣的温度条件下也能够获得较高的驱动电流。 可从下图中确定器件的最大功耗。

器件信息(1)

器件型号	封装	封装尺寸
ALM2402-Q1	DRR (12)	3.00mm x 3.00mm
	HTSSOP (14)	5.00mm x 4.40mm

(1) 要了解所有可用封装，请见数据表末尾的可订购产品附录。

4 简化电路原理图

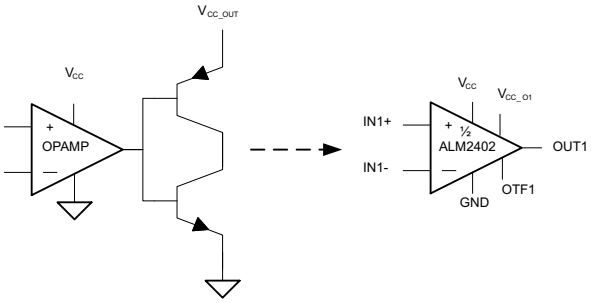

最大功耗与温度间的关系

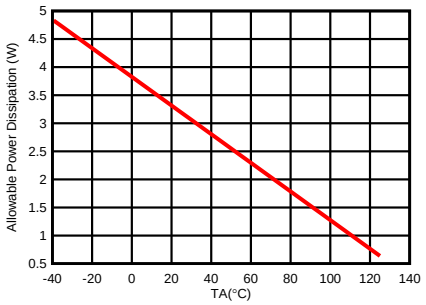

An IMPORTANT NOTICE at the end of this data sheet addresses availability, warranty, changes, use in safety-critical applications, intellectual property matters and other important disclaimers. PRODUCTION DATA.

目录

1 特性 ... 1
2 应用 ... 1
3 说明 ... 1
4 简化电路原理图 ... 1
5 修订历史记录 ... 2
6 **Pin Configuration and Functions** ... 3
7 **Specifications** ... 4
7.1 Absolute Maximum Ratings ... 4
7.2 Thermal Information ... 4
7.3 ESD Ratings ... 4
7.4 Recommended Operating Conditions ... 4
7.5 Electrical Characteristics ... 5
7.6 AC Characteristics ... 5
7.7 Typical Characteristics ... 6
8 **Detailed Description** ... 10
8.1 Overview ... 10
8.2 Functional Block Diagram ... 10
8.3 Feature Description ... 11
8.4 Device Functional Modes ... 13
9 **Applications and Implementation** ... 13
9.1 Application Information ... 13
9.2 Typical Application ... 15
10 **Power Supply Recommendations** ... 20
11 **Layout** ... 21
11.1 Layout Guidelines ... 21
11.2 Layout Example ... 21
12 器件和文档支持 ... 22
12.1 商标 ... 22
12.2 静电放电警告 ... 22
12.3 术语表 ... 22
13 机械、封装和可订购信息 ... 22

5 修订历史记录

Changes from Revision A (April 2015) to Revision B **Page**

- 已将 HBM 分类中的“等级 2”修正为“等级 H2” ... 1

Changes from Original (February 2015) to Revision A **Page**

- 最初发布的完整版文档。 ... 1

Copyright © 2015, Texas Instruments Incorporated

6 Pin Configuration and Functions

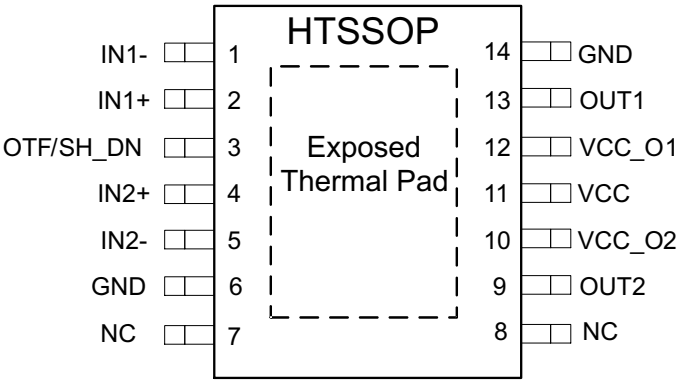

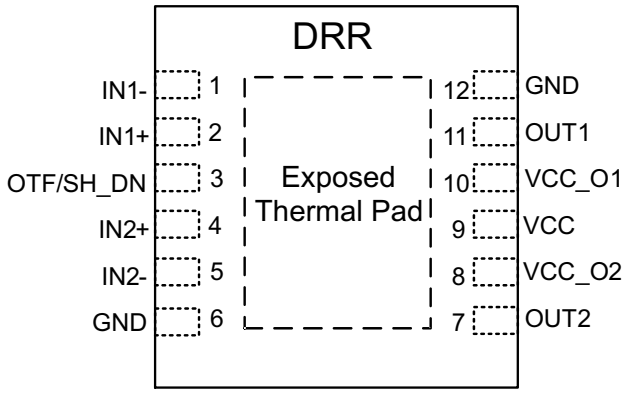

It is recommended to connect the Exposed Pad to ground for best thermal performance. Must not be connected to any other pin than ground. However, it can be left floating.

HTSSOP is in preview

Pin Functions

PIN			I/O	DESCRIPTION
NAME	DDR	PWP(1)		
	NO.	NO.		
IN(X)+	2, 4	2, 4	Input	non-inverting opamp input terminal
IN(X)-	1, 5	1, 5	Input	inverting opamp input terminal
OUT(X)	11, 7	13, 9	Output	Opamp output
OTF/SH_DN	3	3	Input/output	Over temperature flag and Shutdown (see for truth table)
VCC_O(X)	8, 10	10, 12	Input	Output stage supply pin
VCC	9	11	Input	Gain stage supply pin
GND	6, 12	14	Input	Ground pin (Both ground pins must be used and connected together on board)
NC	N/A	7, 8	N/A	No Internal Connection (do no connect)

(1) Preview.

Copyright © 2015, Texas Instruments Incorporated

7 Specifications

7.1 Absolute Maximum Ratings(1)

at 25°C free-air temperature (unless otherwise noted)

		MIN	MAX	UNIT
V_{CC}	Supply Voltage	-0.3	18	V
$V_{CC_(OX)}$	Output supply voltage(2)	-0.3	18	V
$V_{OUT(X)}$	Opamp voltage(2)	-0.3	18	V
$V_{IN(X)}$	Positive and negative input to GND voltage (2)	-0.3	18	V
I_{OTF}	Over Temperature Flag pin maximum Current		20	mA
V_{OTF}	Over Temperature Flag pin maximum Voltage	0	7	V
I_{SC}	Continuous output short current per opamp		Internally Limited 图 6	mA
T_A	Operating free-air temperature range	–40	125	°C
T_J	Operating virtual junction temperature(3)	-40	150	°C
T_{stg}	Storage temperature range	–65	150	°C

(1) Stresses beyond those listed under "absolute maximum ratings" may cause permanent damage to the device. These are stress ratings only, and functional operation of the device at these or any other conditions beyond those indicated under "recommended operating conditions" is not implied. Exposure to absolute-maximum-rated conditions for extended periods may affect device reliability.
(2) All voltage values are with respect to the GND/substrate terminal, unless otherwise noted.
(3) Maximum power dissipation is a function of $T_J(max)$, θ_{JA}, and T_A. The maximum allowable power dissipation at any allowable ambient temperature is $P_D = (T_J(max) – T_A)/\theta_{JA}$. Operating at the absolute maximum T_J of 150°C can affect reliability.

7.2 Thermal Information

THERMAL METRIC(1)		ALM2402Q1 DRR 12 PINS	UNIT
θ_{JA}	Junction-to-ambient thermal resistance	39.2	°C/W
θ_{JCtop}	Junction-to-case (top) thermal resistance	34.5	°C/W
θ_{JB}	Junction-to-board thermal resistance	15.0	°C/W
ψ_{JT}	Junction-to-top characterization parameter	0.3	°C/W
ψ_{JB}	Junction-to-board characterization parameter	15.2	°C/W
θ_{JCbot}	Junction-to-case (bottom) thermal resistance	4.2	°C/W

(1) For more information about traditional and new thermal metrics, see the IC Package Thermal Metrics application report, SPRA953.

7.3 ESD Ratings

			VALUE	UNIT
$V_{(ESD)}$	Electrostatic discharge	Human-body model (HBM), per ANSI/ESDA/JEDEC JS-001(1)	±2000	V
		Charged-device model (CDM), per JEDEC specification JESD22-C101(2)	±750	

(1) JEDEC document JEP155 states that 500-V HBM allows safe manufacturing with a standard ESD control process. Manufacturing with less than 500-V HBM is possible with the necessary precautions.
(2) JEDEC document JEP157 states that 250-V CDM allows safe manufacturing with a standard ESD control process. Manufacturing with less than 250-V CDM is possible with the necessary precautions.

7.4 Recommended Operating Conditions

T_A= 25°C

		MIN	MAX	UNIT
T_J	Junction Temperature	-40	150	°C
T_A	Ambient Temeperature	-40	125	

Copyright © 2015, Texas Instruments Incorporated

Recommended Operating Conditions (continued)

T_A= 25°C

		MIN	MAX	UNIT
I_{OUT} (1)	Continuous output current (sourcing)		400	mA
	Continuous output current (sinking)		400	
V_{IH_OTF}	OTF input high voltage (Opamp "On" or full operation state)	1.0		V
V_{IL_OTF}	OTF input low voltage (Opamp "Off" or shutdown state)		0.35	
$V_{IN(X)}$	Positive and negative input to GND voltage	0	7	
V_{OTF}	Over Temperature Flag pin maximum Voltage	2	5	
V_{CC}	Input Vcc	4.5	16	
$V_{CC_O(X)}$	Output Vcc	3	16	

(1) Current Limit must taken into consideration when choosing maximum output current

7.5 Electrical Characteristics

V_{OTF} = 5 V, V_{CC} = V_{CC_O1} = V_{CC_O2} = 5 V and 12 V; T_A = –40°C to 125°C; Typical Values at T_A = 25°C, unless otherwise noted

PARAMETER		TEST CONDITIONS		MIN	TYP	MAX	UNIT
V_{IO}	Input Offset Voltage (1)	V_{ICM} = Vcc/2, R_L = 10 kΩ			1	15	mV
I_{IB}	Input Bias Current (1)	V_{ICM} = Vcc/2			1.5	100	nA
I_{IOS}	Input Offset Current (1)	V_{ICM} = Vcc/2				30	nA
V_{ICM}	Input Common Mode Range (1)	V_{CC} = 5.0		0.2		Vcc-1.2	V
		V_{CC} = 12.0 V		0.2		7	
I_{CC}	Total Supply Current (both amplifiers)(1)	I_O = 0 A			5	15	mA
		V_{OTF} = 0V			0.5(2)		
Vo	Positive Output Swing	V_{CC} = $V_{CC_O(X)}$ = 5.0 V; V_{ICM} = Vcc/2; V_{ID} = 100 mV	I_{SINK} = 200 mA	4.7	4.87		V
			I_{SINK} = 100 mA	4.85	4.94		
	Negative Output Swing	V_{CC} = $V_{CC_O(X)}$ = 5.0 V; V_{ICM} = Vcc/2; V_{ID} = 100 mV	I_{SOURCE} = 200 mA		200	425	mV
			I_{SOURCE} = 100 mA		100	200	
OTF	Over Temp. Fault and Shutdown(3)			157	165	175	°C
V_{OL_OTF}	Over Temp. Fault low voltage	Rpullup = 2.5 kΩ, Vpullup = 5.0 V				450	mV
I_{LIMIT}	Short to Supply Limit (low-side limit)(4)				550		mA
	Short to Ground Limit (high-side limit)(1)(4)				750		
PSRR	Power Supply Rejection Ratio(1)	V_{CC} = 5.0 V to 12 V, R_L = 10 kΩ, V_{ICM} = Vcc/2, V_O = Vcc/2		65	90		dB
CMRR	Common Mode Rejection Ratio(1)	V_{ICM} = V_{ICM}(min) to V_{ICM}(max), R_L = 10 kΩ, V_O = Vcc/2		45	90		dB
A_{VD}	DC Voltage Gain(1)	RL = 10 kΩ, V_{ICM} = Vcc/2, V_O = 0.3 V to Vcc-1.5		70	90		dB

(1) Tested and verified in closed loop negative feedback configuration.
(2) Verified by design.
(3) Please see refer to *Absolute Maximum Ratings*() table for maximum junction temperature recommendations.
(4) This is the static current limit. It can be temporarily higher in applications due to internal propagation delay.

7.6 AC Characteristics

T_J= –40°C to 125°C; Typical Values at T_A = T_J = 25°C; V_{CC} = V_{CC_O1} = V_{CC_O2} = 5.0 V and 12 V; V_{ICM}=V_{CC}/2

PARAMETER		TEST CONDITIONS	MIN	TYP	MAX	UNIT
GBW	Gain Bandwidth	C_L=15 pF R_L=10 kΩ		600		KHz
PM	Phase Margin	C_L=200 nF R_L= 50 Ω		50		°
GM	Gain Margin	C_L=200 nF R_L= 50 Ω		17		dB
SR	Slew Rate	G = +1; C_L=50 pF; 3 V step		0.17		V/us
THD + N	Total Harmonic Distortion + Noise	A_V = 2 V/V, R_L = 100 Ω, Vo = 8 Vpp, Vcc = 12 V, F = 1 kHz, V_{ICM} = Vcc/2		-80		dB

Copyright © 2015, Texas Instruments Incorporated

AC Characteristics (continued)

T_J= –40°C to 125°C; Typical Values at T_A = T_J = 25°C; V_{CC} = V_{CC_O1} = V_{CC_O2} = 5.0 V and 12 V; V_{ICM}=V_{CC}/2

PARAMETER		TEST CONDITIONS	MIN	TYP	MAX	UNIT
e_n	Input Voltage Noise Density	Vcc = 5 V, F = 1kHz, V_{ICM} = Vcc/2		110		nV/√HZ

7.7 Typical Characteristics

T_A= 25°C and V_{CC} = $V_{CC_O(X)}$

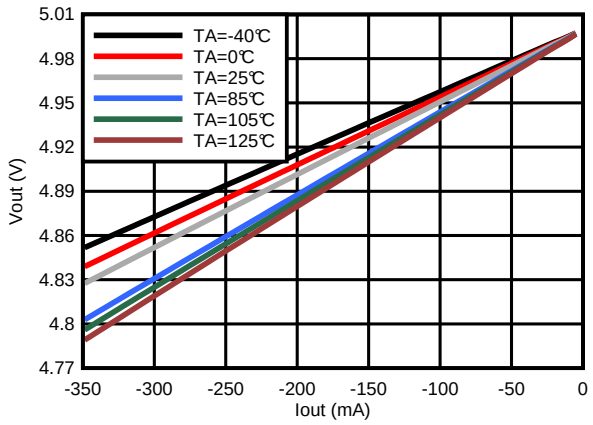

图 1. VOH at VCC = 5 V

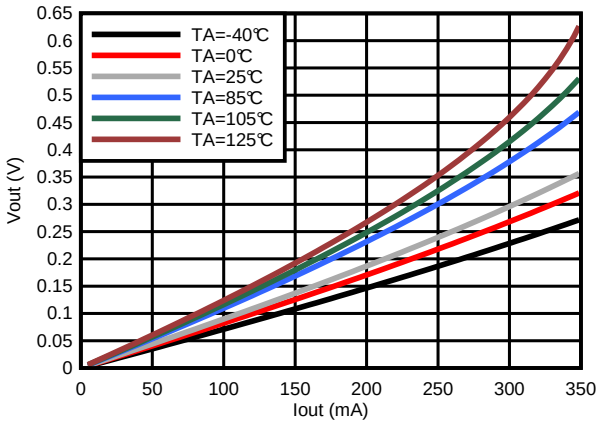

图 2. VOL at VCC = 5V

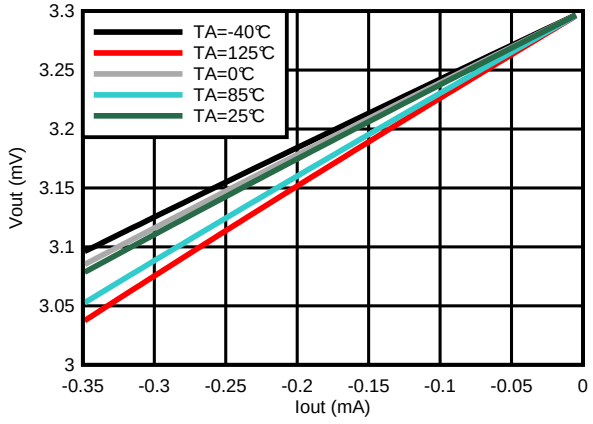

图 3. VOH at VCC = 3.3 V

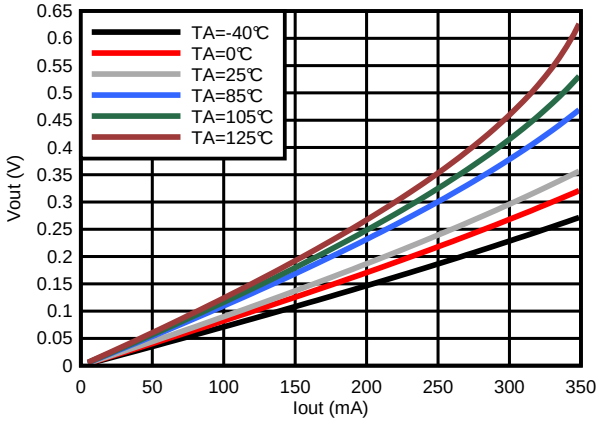

图 4. VOL at VCC = 3.3 V

版权 © 2015, Texas Instruments Incorporated

Typical Characteristics (接下页)

T_A= 25°C and V_{CC} = $V_{CC_O(X)}$

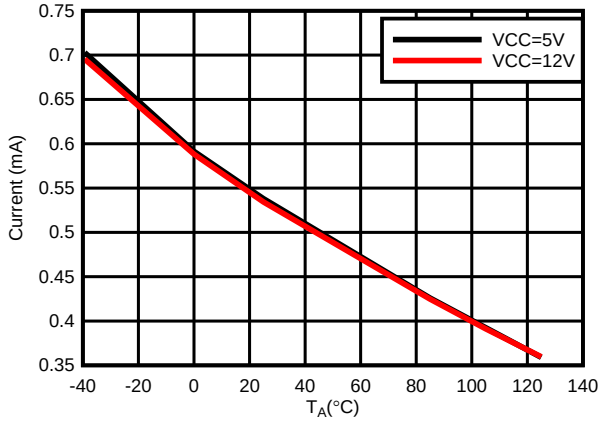

图 5. Short to Supply Current Limit vs. Temperature

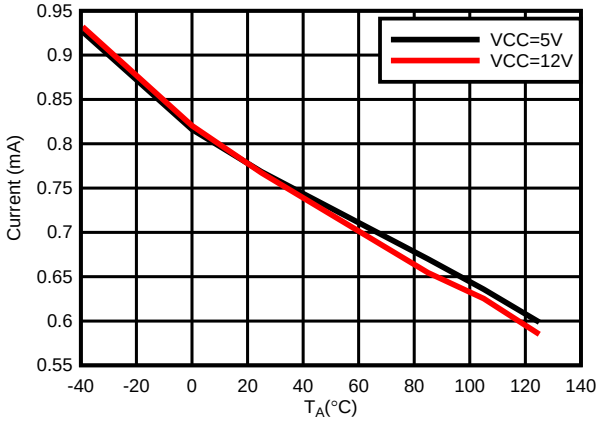

图 6. Short to Groung Current Limit vs. Temperature

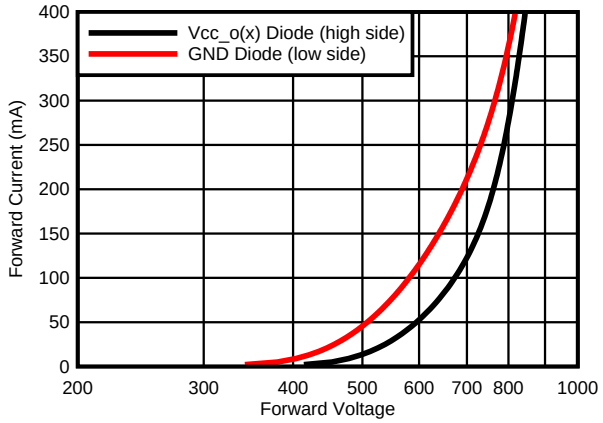

图 7. PMOS (High Side) and NMOS (Low Side) Output Diode Forward Voltage

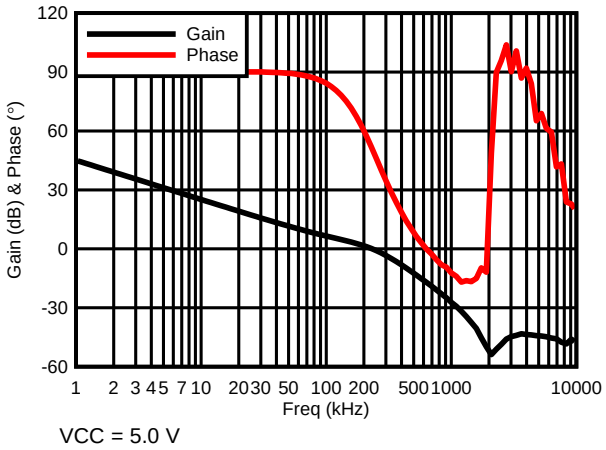

图 8. Gain and Phase (CL = 200 nF and RL = 50 Ω)

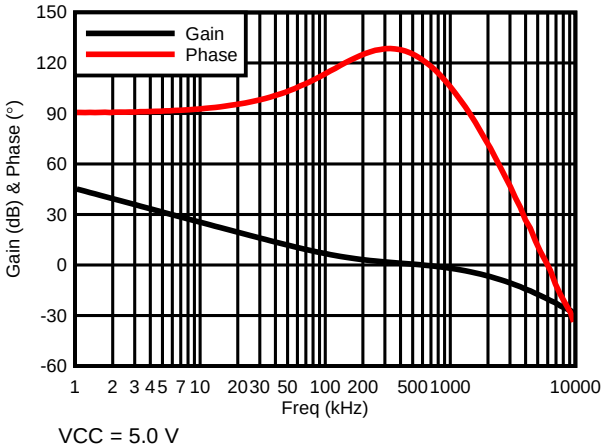

图 9. Gain and Phase (CL = 50 pF and RL = 10 kΩ)

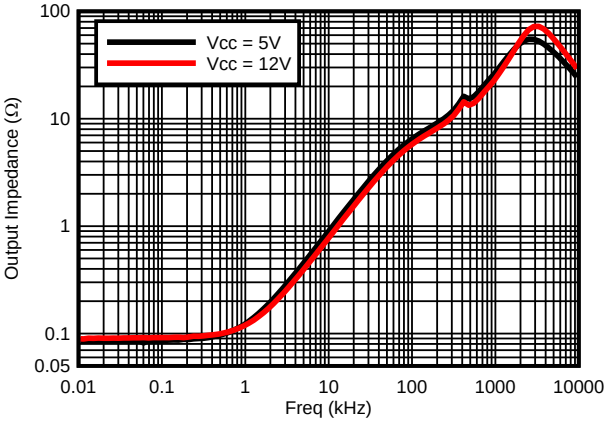

图 10. Output Impedance vs. Frequency

Typical Characteristics (接下页)

T_A= 25°C and V_{CC} = $V_{CC_O(X)}$

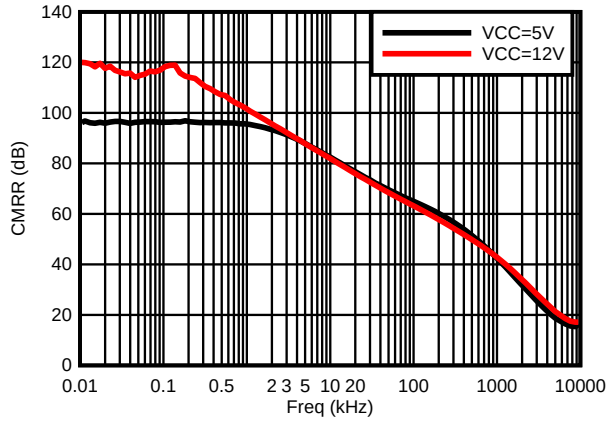

图 11. CMRR vs. Frequency

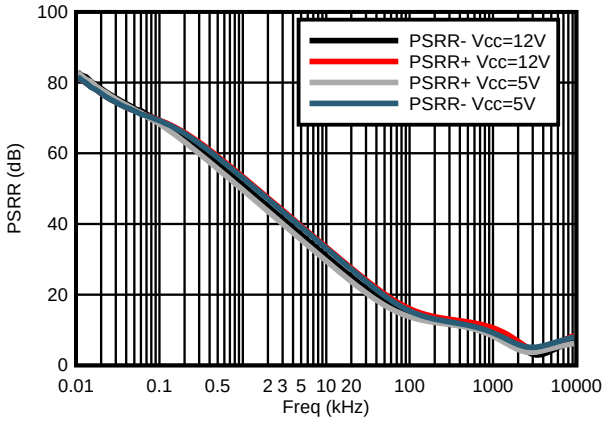

图 12. PSRR vs. Frequency

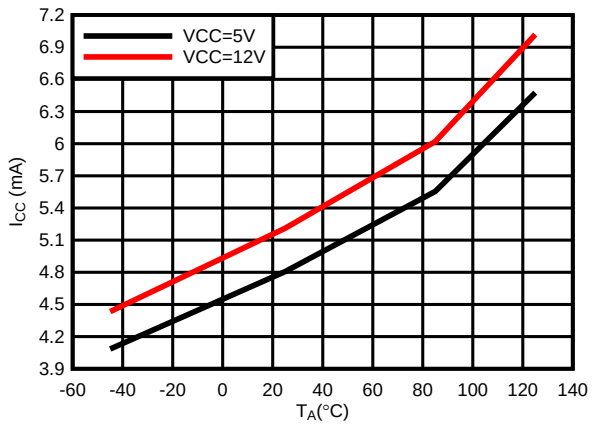

图 13. I_{CC} vs. Temperature

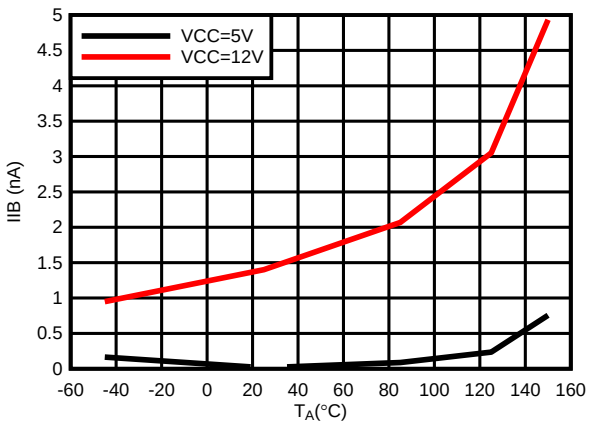

图 14. Input Bias Current vs. Temperature

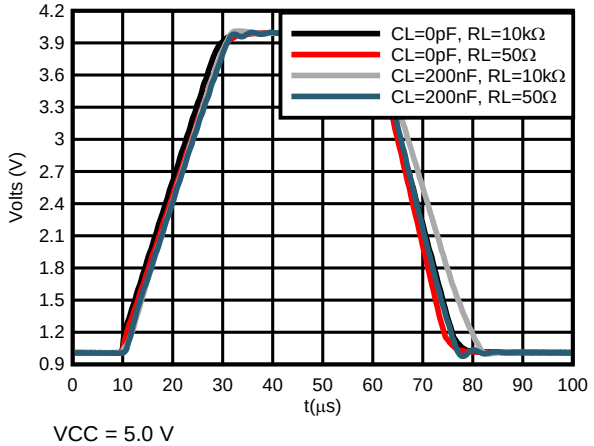

VCC = 5.0 V

图 15. Slew Rate

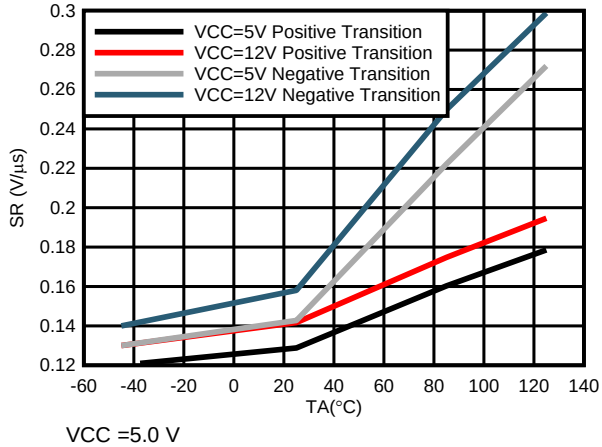

VCC =5.0 V

图 16. Slew Rate vs. Temperature

版权 © 2015, Texas Instruments Incorporated

Typical Characteristics (接下页)

T_A= 25°C and V_{CC} = $V_{CC_O(X)}$

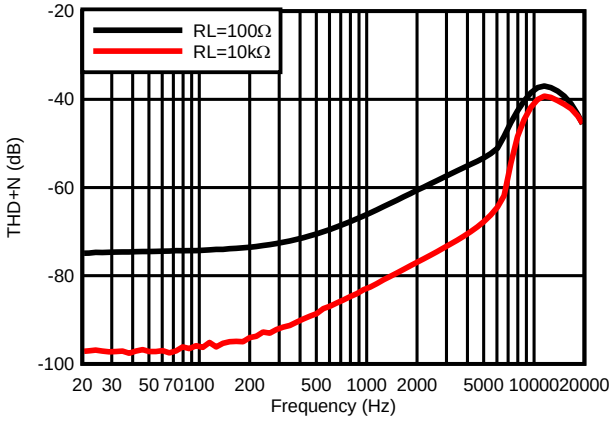

Av = 2V/V Vo = 8Vpp

图 17. THD + Noise (Vcc = 12 V)

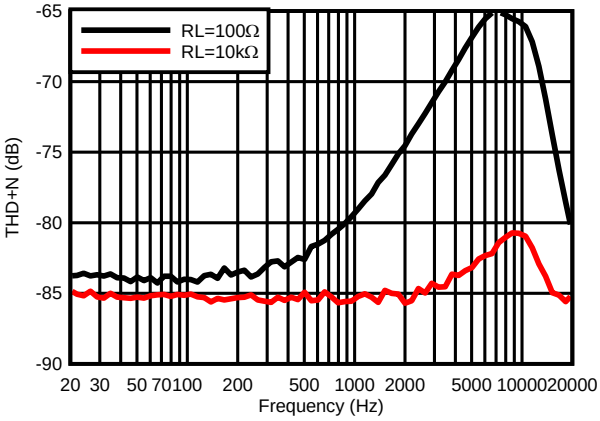

Av = 1V/V Vo = 1Vpp

图 18. THD + Noise (Vcc = 5 V)

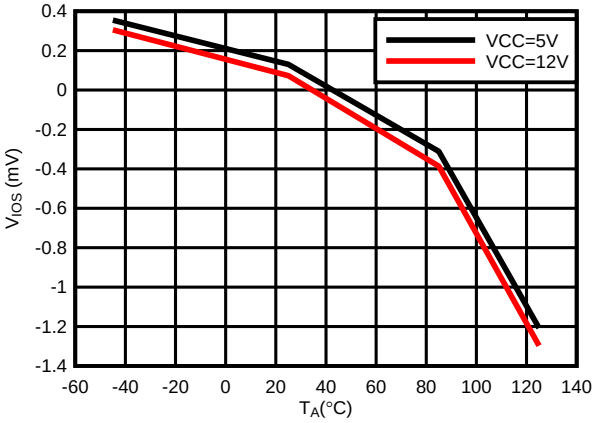

Vcm = Vcc/2

图 19. Input Offset vs. Temperature

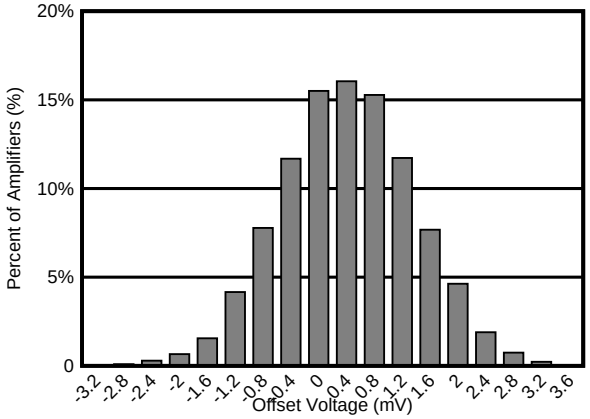

Vcc =12 V and 5 V Vcm = Vcc/2

图 20. Offset Voltage Production Distribution

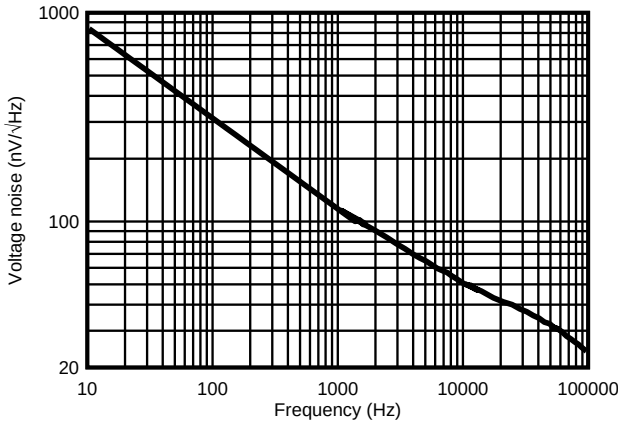

图 21. . Input Voltage Noise Spectral Density vs. Frequency

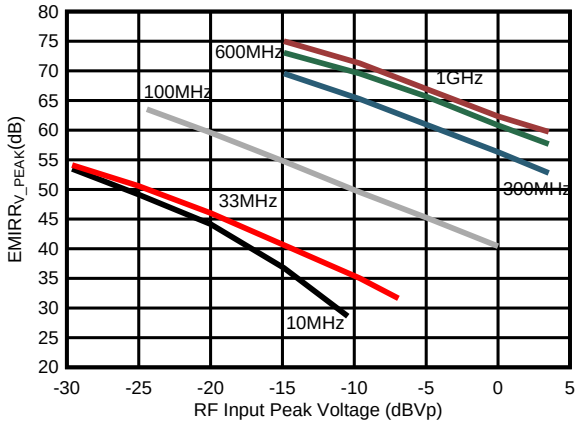

图 22. EMIRR vs. Power

8 Detailed Description

8.1 Overview

ALM2402Q1 is a dual power opamp with features and performance that make it preferable in many applications. Its high voltage tolerance, low offset and drift make it optimal in sensing applications. While its current limiting and over temperature detection make it very robust in applications that drive analog signal off of the PCB on to wires that are susceptible to faults from the outside world.

This device is optimal for applications that require high amounts of power. Its rail to rail output, enabled by the low Rdson PMOS and NMOS transistors keep the power dissipation low. The small 3mm x 3mm DRR package with its thermal pad and low θ_{JA} also allows users to deliver high currents to loads.

Other key features this device offers is its separate output driver supply (for external high-side current limit adjustability), wide stability range (with good phase margin up to 1uF) and shutdown capability (for applications that need low Icc).

8.2 Functional Block Diagram

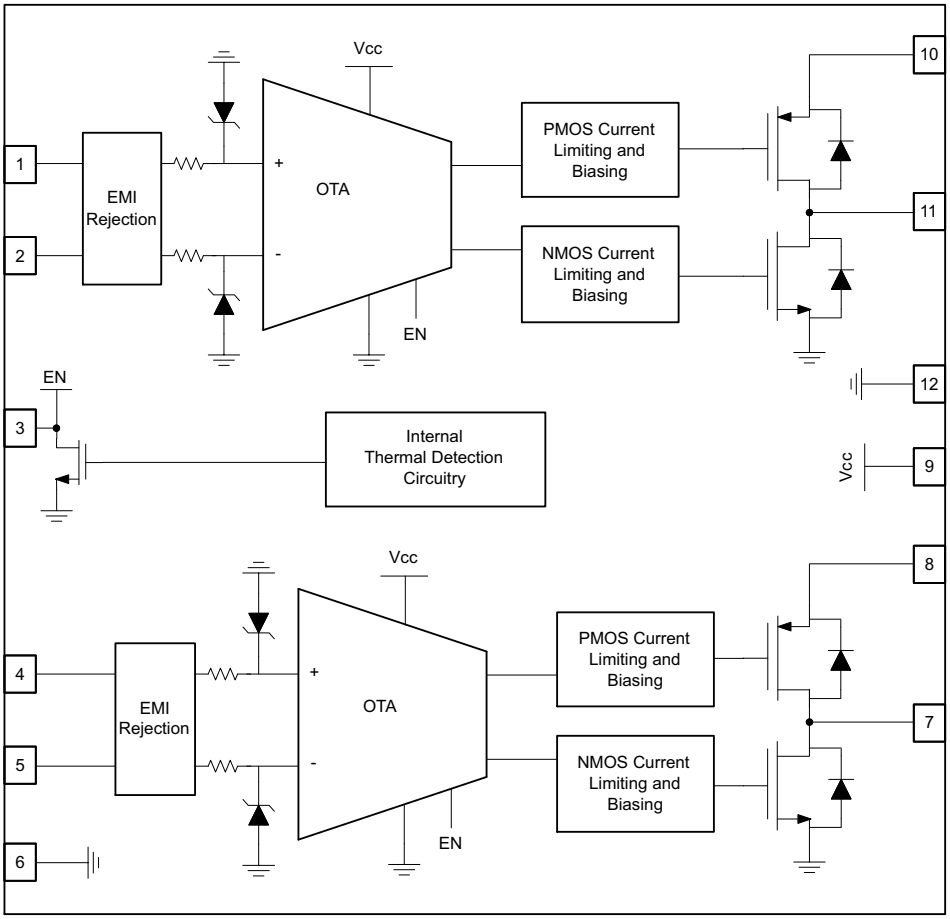

图 23. Functional Block Diagram

版权 © 2015, Texas Instruments Incorporated

8.3 Feature Description

8.3.1 OTF/SH_DN

The OTF/SH_DN pin is a bidirectional pin that will allow the user to put both opamps in to a low Iq state (<500µA) when forced low or below V_{IL_OTF}. Due to this pin being bidirectional and it's Enable/Disable functionality, it must be pulled high or above V_{IH_OTF} through a pullup resistor in order for the opamp to function properly or within the specs guaranteed in *Electrical Characteristics*.

When the junction temperature of ALM2402Q1 crosses the limits specified in *Electrical Characteristics*, the OTF/SH_DN pin will go low to alert the application that the both output have turned off due to an over temperature event. Also, the OTF pin will go low if VCC_O1 and VCC_O2 are 0 V.

When OTF/SH_DN is pulled low and the opamps are shutdown, the opamps will be in open-loop even when there is negative feedback applied. This is due to the loss of open loop gain in the opamps when the biasing is disabled. Please see *Open Loop and Closed Loop* for more detail on open and close loop considerations.

8.3.2 Supply Voltage

ALM2402Q1 uses three power rails. VCC powers the opamp signal path (OTA) and protection circuitry and VCC_O1 and VCC_O2 power the output high side driver.. Each supply can operate at separate voltages levels (higher or lower). The min and max values listed in *Electrical Characteristics* table are voltages that will enable ALM2402Q1 to properly function at or near the specification listed in *Electrical Characteristics* table. The specification listed in this table are guaranteed for 5 V and 12 V.

8.3.3 Current Limit and Short Circuit Protection

Each opamp in ALM2402Q1 has seperate internal current limiting for the PMOS (high-side) and NMOS (low-side) output transistors. If the output is shorted to ground then the PMOS (high-side) current limit is activated and will limit the current to 750mA nominally (see Electrical Characteristics) or to values shown in 图 6 over temperature. If the output is shorted to supply then the NMOS (low-side) current limit is activated and will limit the current to 550mA nominally (see *Electrical Characteristics*) or to values shown in 图 5 over temperature. The current limit value decreases with increasing temperature due to the temperature coefficient of a base-emitter junction voltage. Similarly, the current limit value increases at low temperatures.

A programmable current limit for short to ground scenarios can be achieved by adding resistance between VCC_O(X) and the supply (or battery).

When current is limited, the safe limits for the die temperature (see *Recommended Operating Conditions* and *Absolute Maximum Ratings*) must be taken in to account. With too much power dissipation, the die temperature can surpass the thermal shutdown limits and the opamp will shutdown and reactivate once the die has fallen below thermal limits. However, it is not recommended to continuously operate the device in thermal hysteresis for long periods of time (see *Absolute Maximum Ratings*).

8.3.4 Input Common Mode Range and Overvoltage Clamps

ALM2402Q1's input common mode range is between 0.2V and VCC-1.2V (see Electrical Characteristics). Staying withing this range will allow the opamps to perform and operate within the specification listed in Electrical Characteristics. Operating beyond these limits can cause distortion and non-linearities.

In order for the inputs to tolerate high voltages in the event of a short to supply, zener diodes have been added (see 图 24). The current into this zener is limited via internal resistors. When operating near or above the zener voltage (7 V), the additional voltage gain error caused by the mismatch in internal resistors must be taken in to account. In unity gain, the opamp will force both gate voltages to be equal to the zener voltage on the positive input pin and ideally both zeners will sink the same amount of current and force the output voltage to be equal to Vin. In reality, R_N and R_P and V_Z between both zener diodes do not perfectly match and have some % difference between their values. This leads to the output being $Vo=Vin*(\Delta R + \Delta V_Z)$.

版权 © 2015, Texas Instruments Incorporated

Feature Description (接下页)

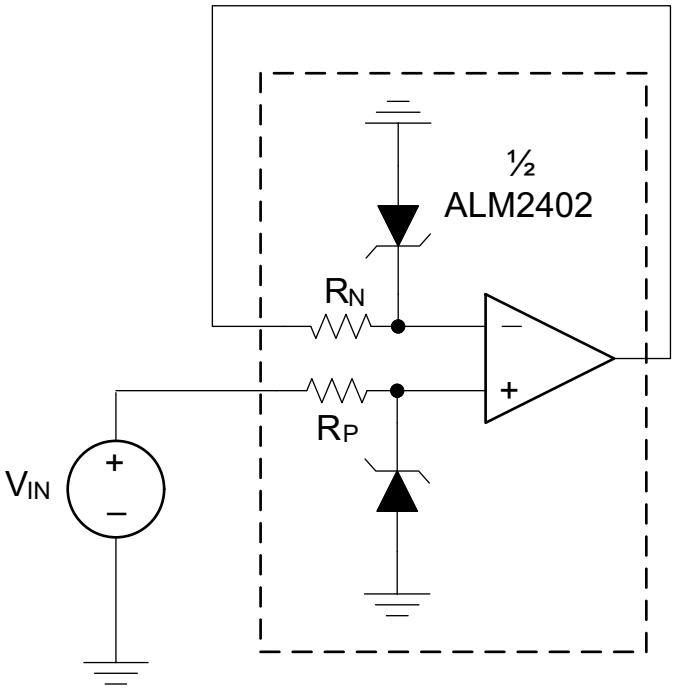

图 24. Schematic Including Input Clamps

8.3.5 Thermal Shutdwon

If the die temperature exceeds safe limits, all outputs will be disabled, and the OTF/SH_DN pin will be driven low. Once the die temperature has fallen to a safe level, operation will automatically resume. The OTF/SH_DN pin will be released after operation has resumed.

When operating the die at a high temperature, the opamp will toggle on and off between the thermal shutdown hysteresis. In this event the safe limits for the die temperature (see *Recommended Operating Conditions* and *Thermal Information*) must be taken in to account. It is not recommended to continuously operate the device in thermal hysteresis for long periods of time (see *Recommended Operating Conditions*).

8.3.6 Output Stage

Designed as a high voltage, high current operational amplifier, the ALM2402Q1 device delivers a robust output drive capability. A class AB output stage with common-source transistors is used to achieve full rail-to-rail output swing capability. For resistive loads up to 10 kΩ, the output swings typically to within 5 mV of either supply rail regardless of the power-supply voltage applied. Different load conditions change the ability of the amplifier to swing close to the rails; refer to the graphs in *Typical Characteristics* section.

Each output transistor has internal reverse diodes between drain and source that will conduct if the output is forced higher than the supply or lower than ground (reverse current flow). Users may choose to use these as flyback protection in inductive load driving applications. 图 7 show I-V characteristics of both diodes. It is recommended to limit the use of these diodes to pulsed operation to minimize junction temperature overheating due to (V_F*I_F). Internal current limiting circuitry will not operate when current is flown in the reverse direction and the reverse diodes are active.

版权 © 2015, Texas Instruments Incorporated

Feature Description (接下页)

8.3.7 EMI Susceptibility and Input Filtering

Op-amps vary with regard to the susceptibility of the device to electromagnetic interference (EMI). If conducted EMI enters the op-amp, the dc offset observed at the amplifier output may shift from the nominal value while EMI is present. This shift is a result of signal rectification associated with the internal semiconductor junctions. While all op-amp pin functions can be affected by EMI, the signal input pins are likely to be the most susceptible. The ALM2402Q1 device incorporates an internal input low-pass filter that reduces the amplifiers response to EMI. Both common-mode and differential mode filtering are provided by this filter.

Texas Instruments has developed the ability to accurately measure and quantify the immunity of an operational amplifier over a broad frequency spectrum extending from 10 MHz to 990 MHz. The EMI rejection ratio (EMIRR) metric allows op-amps to be directly compared by the EMI immunity. 图 22 shows the results of this testing on the ALM2402Q1 device. Detailed information can also be found in the application report, EMI Rejection Ratio of Operational Amplifiers (SBOA128), available for download from www.ti.com

8.4 Device Functional Modes

8.4.1 Open Loop and Closed Loop

Due to its very high open loop DC gain, the ALM2402Q1 will function as a comparator in open loop for most applications. As noted in *Electrical Characteristics* table, the majority of electrical characteristics are verified in negative feedback, closed loop configurations. Certain DC electrical characteristics, like offset, may have a higher drift across temperature and lifetime when continuously operated in open loop over the lifetime of the device.

8.4.2 Shutdown

When the OTF/SH_DN pin is left floating or is grounded, the opamp will shutdown to a low Iq state and will not operate. The opamp outputs will go to a high impedance state. Please see *OTF/SH_DN* for more detailed information on OTF/SH_DN pin.

表 1. Shutdown Truth Table

	Logic State	Opamp State
OTF/SH_DN	High (> VIH_OTF see *Recommended Operating Conditions*)	Operating
	Low (< VIL_OTF see *Recommended Operating Conditions*)	Shutdown (low Iq state)

9 Applications and Implementation

注

Information in the following applications sections is not part of the TI component specification, and TI does not warrant its accuracy or completeness. TI's customers are responsible for determining suitability of components for their purposes. Customers should validate and test their design implementation to confirm system functionality.

9.1 Application Information

ALM2402Q1 is a dual power opamp with performance and protection features that are optimal for many applications. As it is an opamp, there are many general design consideration that must taken into account. Below will describe what to consider for most closed loop applications and gives a specific example of ALM2402Q1 being used in a motor drive application.

9.1.1 Capacitive Load and Stability

The ALM2402Q1 device is designed to be used in applications where driving a capacitive load is required. As with all op-amps, specific instances can occur where the ALM2402Q1 device can become unstable. The particular op-amp circuit configuration, layout, gain, and output loading are some of the factors to consider when establishing whether or not an amplifier is stable in operation. An op-amp in the unity-gain (1 V/V) buffer configuration that drives a capacitive load exhibits a greater tendency to be unstable than an amplifier operated

版权 © 2015, Texas Instruments Incorporated

Application Information (接下页)

at a higher noise gain. The capacitive load, in conjunction with the op-amp output resistance, creates a pole within the feedback loop that degrades the phase margin. The degradation of the phase margin increases as the capacitive loading increases. When operating in the unity-gain configuration, the ALM2402Q1 device remains stable with a pure capacitive load up to approximately 3µF. The equivalent series resistance (ESR) of some very large capacitors (CL greater than 1 µF) is sufficient to alter the phase characteristics in the feedback loop such that the amplifier remains stable. Increasing the amplifier closed-loop gain allows the amplifier to drive increasingly larger capacitance. This increased capability is evident when observing the overshoot response of the amplifier at higher voltage gains.

One technique for increasing the capacitive load drive capability of the amplifier operating in a unity-gain configuration is to insert a small resistor, typically 100mΩ to 10Ω, in series with the output (R_S), as shown in 图 25. This resistor significantly reduces the overshoot and ringing associated with large capacitive loads.

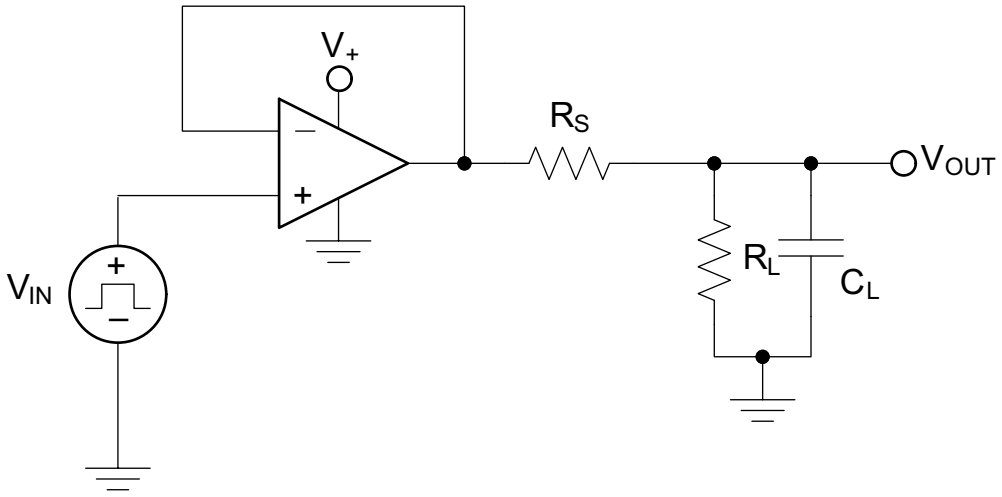

图 25. Capacitive Load Drive

Below are application curves displaying the step response of the above configuration with CL = 2.2 µF, R_L = 10 MΩ and R_L = 100 Ω. Displaying the ALM2402Q1's good stability performance with big capacitive loads.

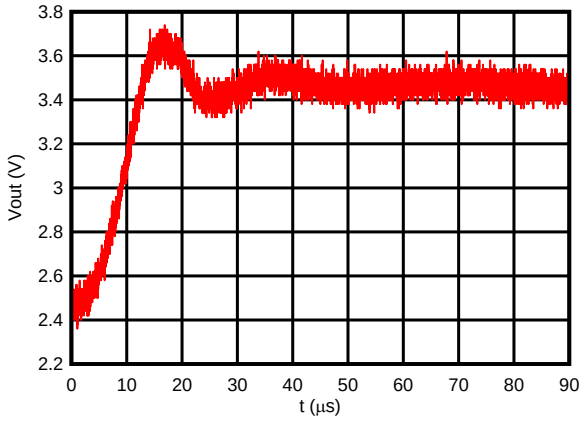

图 26. Output Pulse Response (CL = 2.2 µF and R_L = 10 MΩ)

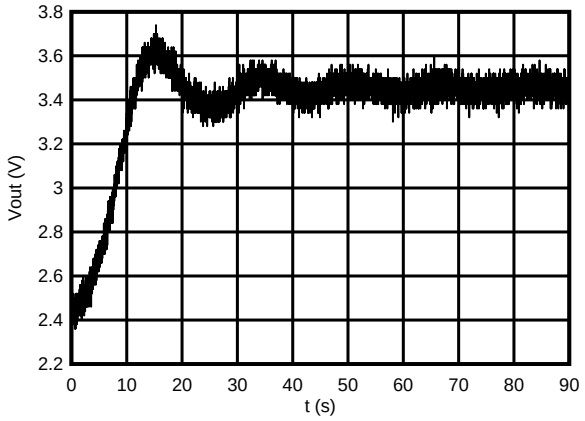

图 27. Output Pulse Response (CL = 2.2 µF and R_L = 100 Ω)

版权 © 2015, Texas Instruments Incorporated

9.2 Typical Application

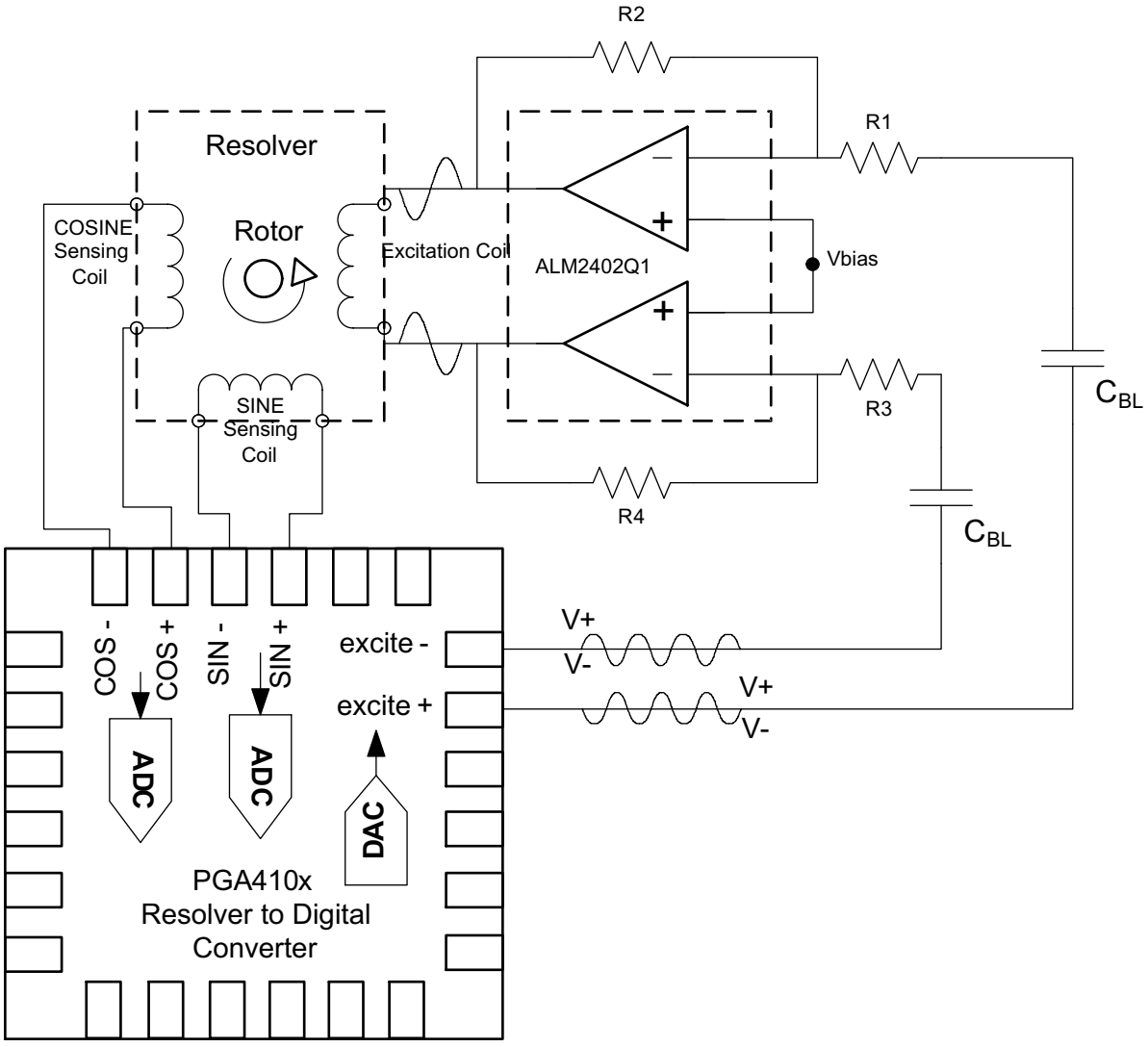

图 28. ALM2402Q1 in Resolver Application

High power AC and BLDC motor drive applications need angular and position feedback in order to efficiently and accurately drive the motor. Position feedback can be achieved by using optical encoders, hall sensors or resolvers. Resolvers are the go to choice when environmental or longevity requirements are challenging and extensive.

A resolver acts like a transformer with one primary coil and two secondary coils. The primary coil, or excitation coil, is located on the rotor of the resolver. As the rotor of the resolver spins, the excitation coil induces a current into the sine and cosine sensing coils. These coils are oriented 90 degrees from one another and produce a vector position read by the resolver to digital converter chip.

Resolver excitation coils can have a very low DC resistance (<100 Ω), causing a need of to sink and source up to 200 mA from the excitation driver. The ALM2402Q1 can source and sink this current while providing current limiting and thermal shutdown protection. Incorporating these protections in a resolver design can increase the life of the end product.

The fundamental design steps and ALM2402Q1 benefits shown in this application example can be applied to other inductive load applications like DC and servo motors. For more information on other applications that ALM2402Q1 offers a solution to please see (SLVA696), available for download from www.ti.com.

Typical Application (接下页)

9.2.1 Design Requirements

For this design example, use the parameters listed in 表 2 as the input parameters.

表 2. Design Parameters

DESIGN PARAMETER	EXAMPLE VALUE
Ambient Temperature Range	-40°C to 125°C
Available Supply Voltages	12 V, 5 V, 3.3 V
EMC Capacitance (CL)	100 nF
Excitation Input Voltage Range	2 Vrms - 7 Vrms
Excitation Frequency	10 kHz

9.2.2 Detailed Design Procedure

When using ALM2402Q1 in a resolver application, determine:

- Resolver Excitation Input Impedance or Resistance and Inductance: Z_O= 50 + j188; (R = 50 Ω and L = 3 mH)
- Resolver Transformation Ration (V_{EXC}/V_{SINCOS}): 0.5 V/V at 10 kHz
- Package and θ_{JA} : DRR, 39.2°C/W
- Opamp Maximum Junction Temperature: 150ºC
- Opamp Bandwidth: 600 kHz

9.2.2.1 Resolver Excitation Input (Opamp Output)

Like a transformer, a resolver needs an alternating current input to function properly. The resolver takes this alternating current from the primary coil (excitation input) and creates a multiple of it on the secondary sides (SIN, COS ports). When determining how to generate this alternating current it is important to understand an opamp's ability or limitations. For the excitation input, the resolver input impedance, stability RMS voltage and desired frequency must be taken in to account:

9.2.2.1.1 Excitation Voltage

For this example, the resolver impedance is specified between 2Vrms and 7Vrms up 20kHz maximum frequency. Since, the resolver attenuation is ~0.5V/V and most data acquisition microelectronics run off of 5V supply voltages. An excitation input of 6Vpp (or 2.12Vrms) will be chosen to give the output readout circuitry enough headroom to measure the secondary side outputs (~3Vpp).

The excitation coil can be driven by a single-ended opamp output with the other side of the coil grounded or differentially as shown in 图 28. Differential drive offers higher peak to peak voltage (double) on to the excitation coil, while not using up as much output voltage headroom from the opamp. Leading to lower distortion on the output signal.

Another consideration for excitation is opamp power dissipation. As described in *Power Dissipation and Thermal Reliability*, power dissipation from the opamp can be lowered by driving the output peak voltages close to the supply and ground voltages. With ALM2402Q1's very low V_{OH}/V_{OL}, this can be easily accomplished. Please see 图 1 for V_{OH}/V_{OL} values with respect to output current and *Output Stage* for further description of the rail-rail output stage.

9.2.2.1.2 Excitation Frequency

The excitation frequency is chosen based on the desired secondary side output signal resolution. As shown in 图 34, the excitation signal is similar to a sampling pulse in ADCs, with the real information being in the envelope created by the rotor. With a GBW of 600kHz, ALM2402Q1 has more than enough open loop gain at 10kHz to create negligible closed loop gain error.

Along with GBW, ALM2402Q1 has optimal THD and SR performance (see *Typical Characteristics*) to achieve 6Vpp (or 3Vpp from each opamp). The signal integrity can also be observed in the *Typical Characteristics* section.

版权 © 2015, Texas Instruments Incorporated

9.2.2.1.3 Excitation Impedance

Knowledge of the primary side impedance is very important when chosing an opamp for this application. As shown below in 图 29, the excitation coil looks like an inductance in series with a resistance. Many time these values aren't given and must by calculated from the cartesian or polar form, as it is given as a function of frequency or phase angle. This calculation is a trivial task.

Once the coil resistance is determined, the maximum or peak-peak current needed from ALM2402Q1 can be determined by below:

$$I_{OUT} = \frac{V_{PP}}{R_{EXC}} \quad (1)$$

In this example the peak-peak output current equates to ~120mA. Each opamp will handle the peak current, with one sinking max and the other sourcing. Knowledge of the opamp current is very important when determining ALM2402Q1's power dissipation. Which is discussed in the *Power Dissipation and Thermal Reliability* section.

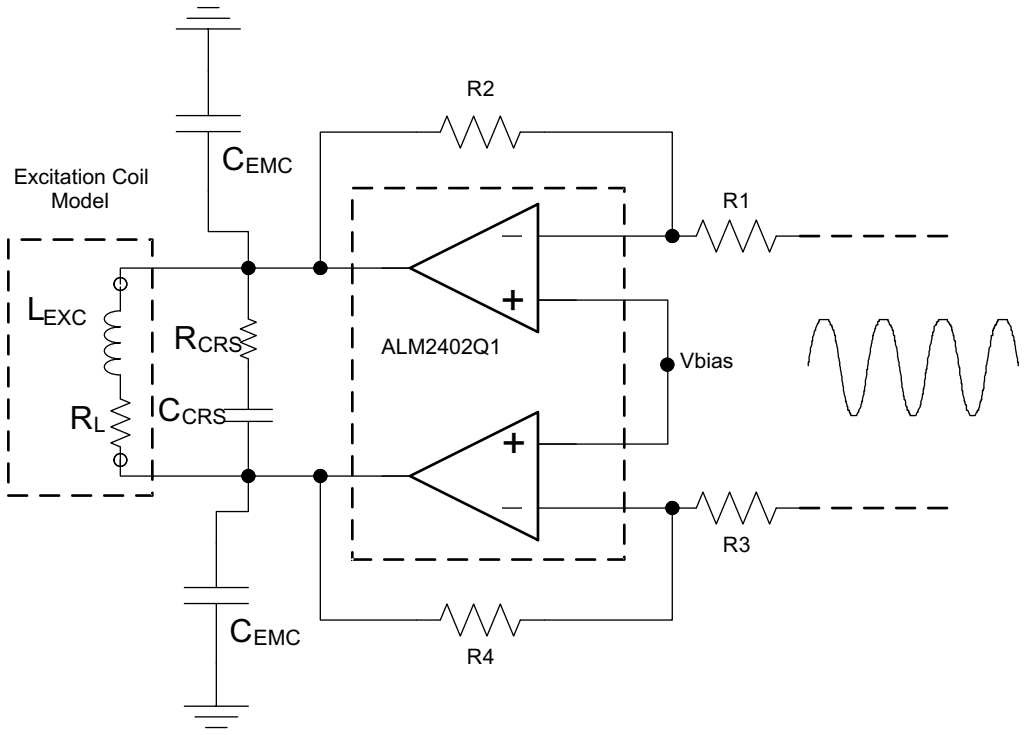

图 29. Excitation Coil Implementation

The primary side of a resolver is inductive, but that typically is not all the opamps driving the coils see. As shown in , many times designers will add a resistor in series with a capacitor to illiminate crossover distortion. Which happens due to the biasing of BJTs in the discrete implementation. With ALM2402Q1's rail-rail output, this is rarely needed. This can be seen in the waveforms shown in the section.

It is also common practice to add EMC capacitors to the opamp outputs to help shield other devices on the PCB from the radiation created by the motor and resolver. When choosing C_{EMC}, it ismportant to take the opamp's stability in to account. With ALM2402Q1 having bery good phase margin at and above 200nF, no stability issues will be present for many typical C_{EMC} values.

9.2.2.2 Resolver Output

As mentioned in the *Excitation Frequency* section, the excitation signal is similar to a sampling pulse in ADCs, with the real information being in the envelope created by the rotor. The equations below show the behavior of the sin and cos outputs. Whereby the excitation signal is attenuated and enveloped by the voltage created from the electromagnetic response of the rotating rotor. The resolver analog output to digital converter will filter out the excitation signal and process the sine and cosine angles produced by the rotor. Hince, signal intergity or the sine and cosine envelope is most important in resolver design and some trade-offs in signal integrity of the excitation signal can be made for cost or convenience. Many times users can use a square wave or sawtooth signal to accomplish excitation, as opposed to a sine wave.

$$V_{EXC} = V_{PP} \times \sin(2\pi ft) \tag{2}$$

$$V_{SIN} = T_R \times V_{PP} \times \sin(2\pi ft) \times \sin(\theta) \tag{3}$$

$$V_{COS} = T_R \times V_{PP} \times \sin(2\pi ft) \times \cos(\theta) \tag{4}$$

9.2.2.3 Power Dissipation and Thermal Reliability

Very critical aspects to many industrial and automotive applications are operating temperature and power dissipation. Resolvers are typically chosen over other position feedback techniques due to their sustainability and accuracy in harsh conditions and very high temperatures.

Along with the resolver, the electronics used in this system must be able to withstand these conditions. ALM2402Q1 is Q100 qualified and is able to operate at temperatures up to 125°C. In order to insure that this device can withstand these temperatures, the internal power dissipation must be determined.

The total power dissipation from ALM2402Q1 in this application is the sum of the power from the input supply and output supplies.

$$P_D = P_{SS} + (P_{SSO} - P_L) \tag{5}$$

(Input Supply Power; Output Supply Power; Load Power)

As shown in the equation below. P_{SS} is a function of the internal supply and operating current of both opamps (I_{CC}). With this opamp being CMOS, the ICC will not increase proportionally to the load like a BJT based design. It will stay close to the average value listed in *Electrical Characteristics*.

$$P_D = V_{CC} \times I_{CC} + \left(V_{CCO(X)} - V_{OUT}(RMS)\right) \times I_{OUT}(RMS)$$

For more information on this and calculating and measuring power dissipation with complex loads, please refer to (SBOA022), available for download from www.ti.com (6)

$$P_D = 12\ V \times 5\ mA + \left(12\ V - \frac{3\ V}{\sqrt{2}}\right) \times \frac{60\ mA}{\sqrt{2}} = 480\ mW \tag{7}$$

As shown in图 30, the load current will flow out of one opamp, through the load and in to the other. Each opamp shares the same load at 180° phase difference. The PMOS and NMOS output transistors are resistive when driven near supply and ground. Operating the output voltage at a high percentage of the supply voltage will greatly limit the chip power dissipation. The *Typical Characteristics* section gives more information on the expected voltage drop, that can be used to determine the limits of V_{OUT}.

版权 © 2015, Texas Instruments Incorporated

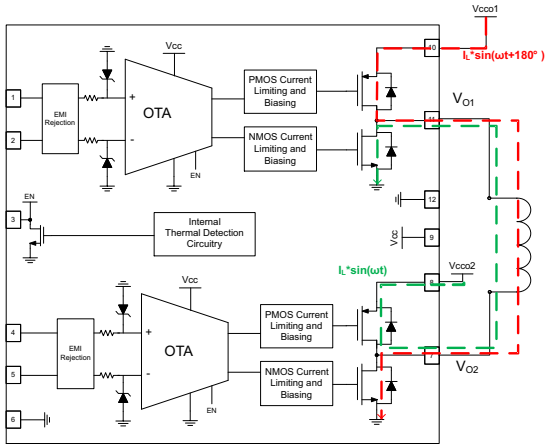

图 30. ALM2402Q1 Current Flow

After the total power dissipation is determined, the junction temperature at the worst expected ampient temperature case must be determined. This can be determined by 公式 9 below or from 图 31.

$$T_{J(MAX)} = P_D \times \theta_{JA} + T_{A(MAX)} \tag{8}$$

$$T_{J(MAX)} = 480\ mW \times 39.2\ \frac{°C}{W} + 125°C = 143.8°C$$

Where:

$T_{J(MAX)}$ is the target maximum junction temperature. → 150°C

T_A is the operating ambient temperature. → 125°C

θ_{JA} is the package junction to ambient thermal resistance. → 39.2°C/W (9)

For this example, the maximum junction temperature equates to ~144ºC which is in the safe operating region, below the maximum junction temperature of 150°C. It is required to limit ALM2402Q1's die junction temperature to less than 150°C. Please see *Absolute Maximum Ratings* table for further detail.

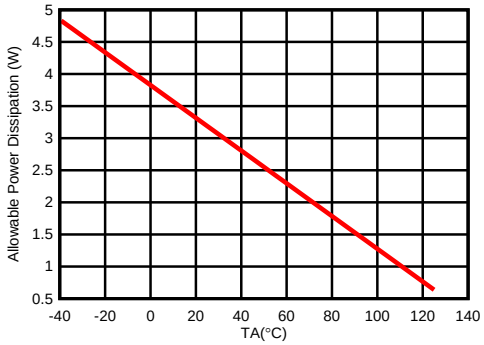

Maximum power dissipation is a function of TJ(max), θJA, and TA. The maximum allowable power dissipation at any allowable ambient temperature is $P_D = (T_{J(max)} – T_A)/\theta_{JA}$. Operating at the absolute maximum T_J of 150°C can affect reliability.

图 31. Maximum Power Dissipation vs Temperature (DRR)

9.2.2.3.1 Improving Package Thermal Performance

θ_{JA} value depends on the PC board layout. An external heat sink and/or a cooling mechanism, like a cold air fan, can help reduce θ_{JA} and thus improve device thermal capabilities. Refer to TI's design support web page at www.ti.com/thermal for a general guidance on improving device thermal performance.

9.2.3 Application Curves

Below is test data with ALM2402Q1 exciting TE Connectivity (V23401-D1001-B102) Hollow Shaft Resolver.

表 3. Waveform Legend

Waveform Color	Description
Green	SINE output
Blue	COSINE output
Red	Excitation positive terminal inputs (referenced to ground)
Purple	Excitation negative terminal inputs (referenced to ground)

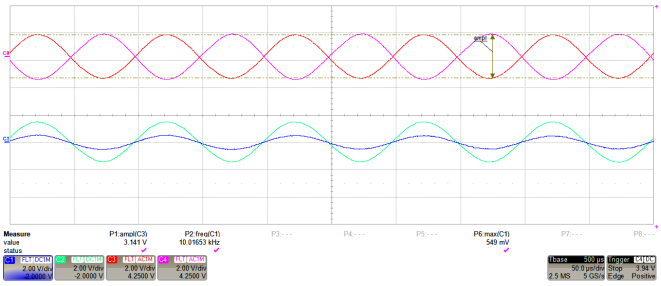

The peak-peak excitation voltage is the difference between the green and blue voltages

图 32. Resolver Excitation V_{EXC} ≈ 6 V_{pp} 10 kHz

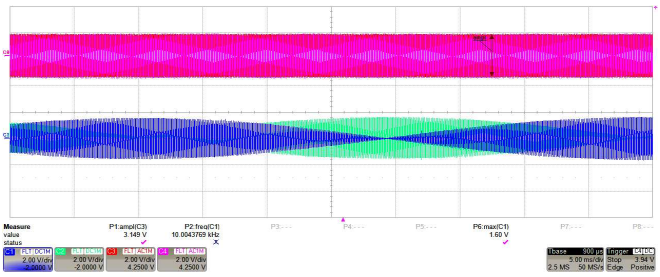

The peak-peak excitation voltage is the difference between the green and blue voltages

图 33. Resolver Excitation V_{EXC}≈6V_{pp} at 10 kHz (ZOOM)

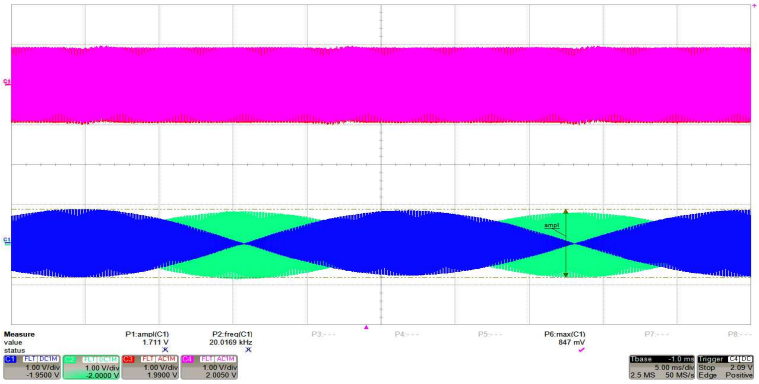

The peak-peak excitation voltage is the difference between the green and blue voltages

图 34. Resolver Excitation V_{EXC}≈4V_{pp} at 20 kHz

10 Power Supply Recommendations

The ALM2402Q1 device is recommended for continuous operation from 4.5V to 16V (±2.25V to ±8.0V) for Vcc and 3.0V to 16V (±1.5V to ±8.0V) for Vcc_o(x); many specifications apply from –40°C to 125°C. The *Typical Characteristics* presents parameters that can exhibit significant variance with regard to operating voltage or temperature.

CAUTION

Supply voltages larger than 18V can permanently damage the device (see *Absolute maximum Ratings*).

Place 0.1-µF bypass capacitors close to the power-supply pins to reduce errors coupling in from noisy or high impedance power supplies. For more detailed information on bypass capacitor placement, refer to the *Layout Guidelines* section.

版权 © 2015, Texas Instruments Incorporated

11 Layout

11.1 Layout Guidelines

For best operational performance of the device, use good PCB layout practices, including:

- Noise can propagate into analog circuitry through the power pins of the circuit as a whole, as well as the operational amplifier. Bypass capacitors are used to reduce the coupled noise by providing low impedance power sources local to the analog circuitry.
  - Connect low-ESR, 0.1-µF ceramic bypass capacitors between each supply pin and ground, placed as close to the device as possible. A single bypass capacitor from V+ to ground is applicable for single supply applications.
- Separate grounding for analog and digital portions of circuitry is one of the simplest and most-effective methods of noise suppression. One or more layers on multilayer PCBs are usually devoted to ground planes. A ground plane helps distribute heat and reduces EMI noise pickup. Make sure to physically separate digital and analog grounds, paying attention to the flow of the ground current. For more detailed information, refer to *Circuit Board Layout Techniques*, (SLOA089).
- To reduce parasitic coupling, run the input traces as far away from the supply or output traces as possible. If it is not possible to keep them separate, it is much better to cross the sensitive trace perpendicular as opposed to in parallel with the noisy trace.
- Keep the length of input traces as short as possible. Always remember that the input traces are the most sensitive part of the circuit.

11.2 Layout Example

This layout does not verify optimum thermal impedance performance. Refer to TI's design support web page at www.ti.com/thermal for a general guidance on improving device thermal performance.

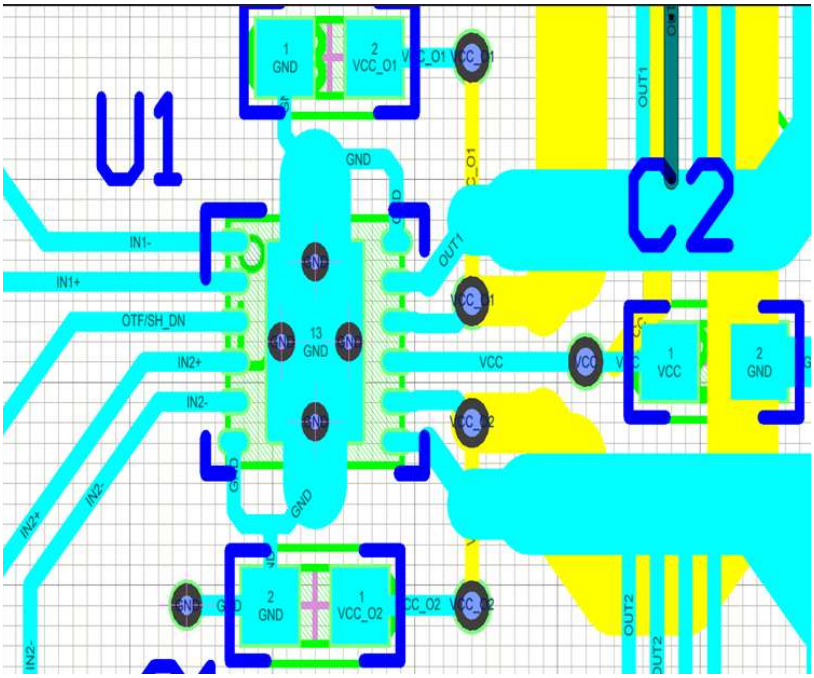

图 35. ALM2402Q1 Layout Example

12 器件和文档支持

12.1 商标

All trademarks are the property of their respective owners.

12.2 静电放电警告



这些装置包含有限的内置 ESD 保护。 存储或装卸时，应将导线一起截短或将装置放置于导电泡棉中，以防止 MOS 门极遭受静电损伤。

12.3 术语表

SLYZ022 — *TI 术语表*。

这份术语表列出并解释术语、首字母缩略词和定义。

13 机械、封装和可订购信息

以下页中包括机械、封装和可订购信息。 这些信息是针对指定器件可提供的最新数据。 这些数据会在无通知且不对本文档进行修订的情况下发生改变。 欲获得该数据表的浏览器版本，请查阅左侧的导航栏。

版权 © 2015, Texas Instruments Incorporated

重要声明

德州仪器(TI) 及其下属子公司有权根据 JESD46 最新标准, 对所提供的产品和服务进行更正、修改、增强、改进或其它更改， 并有权根据 JESD48 最新标准中止提供任何产品和服务。客户在下订单前应获取最新的相关信息, 并验证这些信息是否完整且是最新的。所有产品的销售都遵循在订单确认时所提供的TI 销售条款与条件。

TI 保证其所销售的组件的性能符合产品销售时 TI 半导体产品销售条件与条款的适用规范。仅在 TI 保证的范围内，且 TI 认为 有必要时才会使用测试或其它质量控制技术。除非适用法律做出了硬性规定，否则没有必要对每种组件的所有参数进行测试。

TI 对应用帮助或客户产品设计不承担任何义务。客户应对其使用 TI 组件的产品和应用自行负责。为尽量减小与客户产品和应 用相关的风险，客户应提供充分的设计与操作安全措施。

TI 不对任何 TI 专利权、版权、屏蔽作品权或其它与使用了 TI 组件或服务的组合设备、机器或流程相关的 TI 知识产权中授予 的直接或隐含权限作出任何保证或解释。TI 所发布的与第三方产品或服务有关的信息，不能构成从 TI 获得使用这些产品或服 务的许可、授权、或认可。使用此类信息可能需要获得第三方的专利权或其它知识产权方面的许可，或是 TI 的专利权或其它 知识产权方面的许可。

对于 TI 的产品手册或数据表中 TI 信息的重要部分，仅在没有对内容进行任何篡改且带有相关授权、条件、限制和声明的情况 下才允许进行复制。TI 对此类篡改过的文件不承担任何责任或义务。复制第三方的信息可能需要服从额外的限制条件。

在转售 TI 组件或服务时，如果对该组件或服务参数的陈述与 TI 标明的参数相比存在差异或虚假成分，则会失去相关 TI 组件 或服务的所有明示或暗示授权，且这是不正当的、欺诈性商业行为。TI 对任何此类虚假陈述均不承担任何责任或义务。

客户认可并同意，尽管任何应用相关信息或支持仍可能由 TI 提供，但他们将独力负责满足与其产品及在其应用中使用 TI 产品 相关的所有法律、法规和安全相关要求。客户声明并同意，他们具备制定与实施安全措施所需的全部专业技术和知识，可预见 故障的危险后果、监测故障及其后果、降低有可能造成人身伤害的故障的发生机率并采取适当的补救措施。客户将全额赔偿因 在此类安全关键应用中使用任何 TI 组件而对 TI 及其代理造成的任何损失。

在某些场合中，为了推进安全相关应用有可能对 TI 组件进行特别的促销。TI 的目标是利用此类组件帮助客户设计和创立其特 有的可满足适用的功能安全性标准和要求的终端产品解决方案。尽管如此，此类组件仍然服从这些条款。

TI 组件未获得用于 FDA Class III（或类似的生命攸关医疗设备）的授权许可，除非各方授权官员已经达成了专门管控此类使 用的特别协议。

只有那些 TI 特别注明属于军用等级或"增强型塑料"的 TI 组件才是设计或专门用于军事/航空应用或环境的。购买者认可并同 意，对并非指定面向军事或航空航天用途的 TI 组件进行军事或航空航天方面的应用，其风险由客户单独承担，并且由客户独 力负责满足与此类使用相关的所有法律和法规要求。

TI 已明确指定符合 ISO/TS16949 要求的产品，这些产品主要用于汽车。在任何情况下，因使用非指定产品而无法达到 ISO/TS16949 要求，TI不承担任何责任。

	产品		应用
数字音频	www.ti.com.cn/audio	通信与电信	www.ti.com.cn/telecom
放大器和线性器件	www.ti.com.cn/amplifiers	计算机及周边	www.ti.com.cn/computer
数据转换器	www.ti.com.cn/dataconverters	消费电子	www.ti.com/consumer-apps
DLP® 产品	www.dlp.com	能源	www.ti.com/energy
DSP - 数字信号处理器	www.ti.com.cn/dsp	工业应用	www.ti.com.cn/industrial
时钟和计时器	www.ti.com.cn/clockandtimers	医疗电子	www.ti.com.cn/medical
接口	www.ti.com.cn/interface	安防应用	www.ti.com.cn/security
逻辑	www.ti.com.cn/logic	汽车电子	www.ti.com.cn/automotive
电源管理	www.ti.com.cn/power	视频和影像	www.ti.com.cn/video
微控制器 (MCU)	www.ti.com.cn/microcontrollers		
RFID 系统	www.ti.com.cn/rfidsys		
OMAP应用处理器	www.ti.com/omap		
无线连通性	www.ti.com.cn/wirelessconnectivity	德州仪器在线技术支持社区	www.deyisupport.com

邮寄地址： 上海市浦东新区世纪大道1568 号，中建大厦32 楼邮政编码： 200122
Copyright © 2015, 德州仪器半导体技术（上海）有限公司

PACKAGING INFORMATION

Orderable Device	Status (1)	Package Type	Package Drawing	Pins	Package Qty	Eco Plan (2)	Lead/Ball Finish (6)	MSL Peak Temp (3)	Op Temp (°C)	Device Marking (4/5)	Samples
ALM2402QDRRRQ1	ACTIVE	SON	DRR	12	3000	Green (RoHS & no Sb/Br)	CU NIPDAU	Level-2-260C-1 YEAR	-40 to 125	ALM24Q	Samples
ALM2402QPWPRQ1	ACTIVE	HTSSOP	PWP	14	2000	Green (RoHS & no Sb/Br)	CU NIPDAU	Level-3-260C-168 HR	-40 to 125	ALM24Q	Samples

(1) The marketing status values are defined as follows:
ACTIVE: Product device recommended for new designs.
LIFEBUY: TI has announced that the device will be discontinued, and a lifetime-buy period is in effect.
NRND: Not recommended for new designs. Device is in production to support existing customers, but TI does not recommend using this part in a new design.
PREVIEW: Device has been announced but is not in production. Samples may or may not be available.
OBSOLETE: TI has discontinued the production of the device.

(2) Eco Plan - The planned eco-friendly classification: Pb-Free (RoHS), Pb-Free (RoHS Exempt), or Green (RoHS & no Sb/Br) - please check http://www.ti.com/productcontent for the latest availability information and additional product content details.
TBD: The Pb-Free/Green conversion plan has not been defined.
Pb-Free (RoHS): TI's terms "Lead-Free" or "Pb-Free" mean semiconductor products that are compatible with the current RoHS requirements for all 6 substances, including the requirement that lead not exceed 0.1% by weight in homogeneous materials. Where designed to be soldered at high temperatures, TI Pb-Free products are suitable for use in specified lead-free processes.
Pb-Free (RoHS Exempt): This component has a RoHS exemption for either 1) lead-based flip-chip solder bumps used between the die and package, or 2) lead-based die adhesive used between the die and leadframe. The component is otherwise considered Pb-Free (RoHS compatible) as defined above.
Green (RoHS & no Sb/Br): TI defines "Green" to mean Pb-Free (RoHS compatible), and free of Bromine (Br) and Antimony (Sb) based flame retardants (Br or Sb do not exceed 0.1% by weight in homogeneous material)

(3) MSL, Peak Temp. - The Moisture Sensitivity Level rating according to the JEDEC industry standard classifications, and peak solder temperature.

(4) There may be additional marking, which relates to the logo, the lot trace code information, or the environmental category on the device.

(5) Multiple Device Markings will be inside parentheses. Only one Device Marking contained in parentheses and separated by a "~" will appear on a device. If a line is indented then it is a continuation of the previous line and the two combined represent the entire Device Marking for that device.

(6) Lead/Ball Finish - Orderable Devices may have multiple material finish options. Finish options are separated by a vertical ruled line. Lead/Ball Finish values may wrap to two lines if the finish value exceeds the maximum column width.

Important Information and Disclaimer: The information provided on this page represents TI's knowledge and belief as of the date that it is provided. TI bases its knowledge and belief on information provided by third parties, and makes no representation or warranty as to the accuracy of such information. Efforts are underway to better integrate information from third parties. TI has taken and continues to take reasonable steps to provide representative and accurate information but may not have conducted destructive testing or chemical analysis on incoming materials and chemicals. TI and TI suppliers consider certain information to be proprietary, and thus CAS numbers and other limited information may not be available for release.

In no event shall TI's liability arising out of such information exceed the total purchase price of the TI part(s) at issue in this document sold by TI to Customer on an annual basis.

TAPE AND REEL INFORMATION

REEL DIMENSIONS

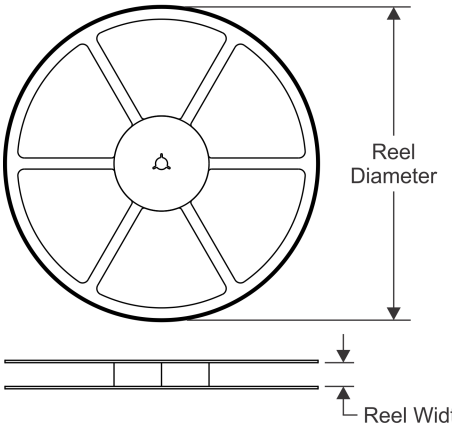

TAPE DIMENSIONS

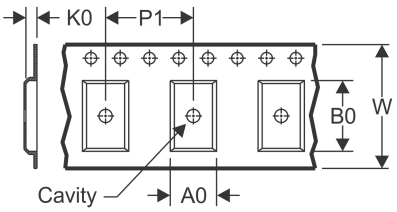

A0	Dimension designed to accommodate the component width
B0	Dimension designed to accommodate the component length
K0	Dimension designed to accommodate the component thickness
W	Overall width of the carrier tape
P1	Pitch between successive cavity centers

QUADRANT ASSIGNMENTS FOR PIN 1 ORIENTATION IN TAPE

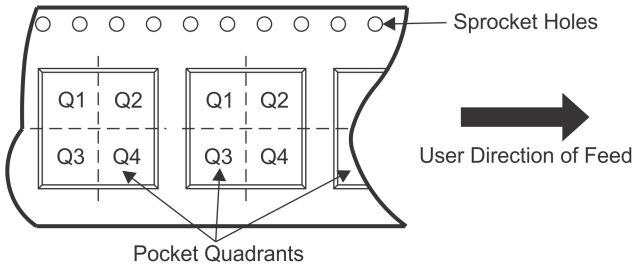

*All dimensions are nominal

Device	Package Type	Package Drawing	Pins	SPQ	Reel Diameter (mm)	Reel Width W1 (mm)	A0 (mm)	B0 (mm)	K0 (mm)	P1 (mm)	W (mm)	Pin1 Quadrant
ALM2402QDRRRQ1	SON	DRR	12	3000	330.0	12.4	3.3	3.3	1.1	8.0	12.0	Q2
ALM2402QPWPRQ1	HTSSOP	PWP	14	2000	330.0	12.4	6.9	5.6	1.6	8.0	12.0	Q1

TAPE AND REEL BOX DIMENSIONS

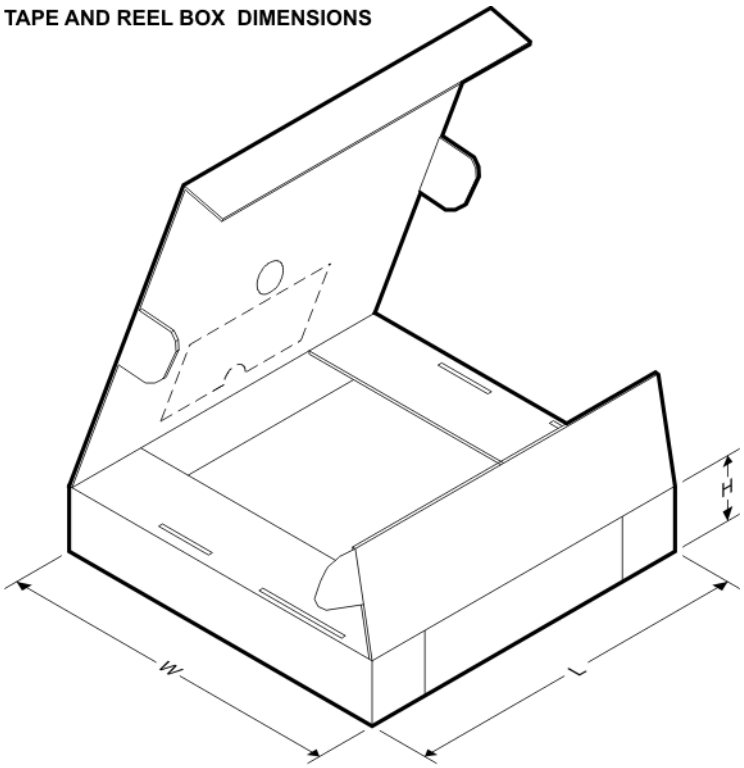

*All dimensions are nominal

Device	Package Type	Package Drawing	Pins	SPQ	Length (mm)	Width (mm)	Height (mm)
ALM2402QDRRRQ1	SON	DRR	12	3000	367.0	367.0	35.0
ALM2402QPWPRQ1	HTSSOP	PWP	14	2000	350.0	350.0	43.0

PWP (R–PDSO–G14) PowerPAD™ PLASTIC SMALL OUTLINE

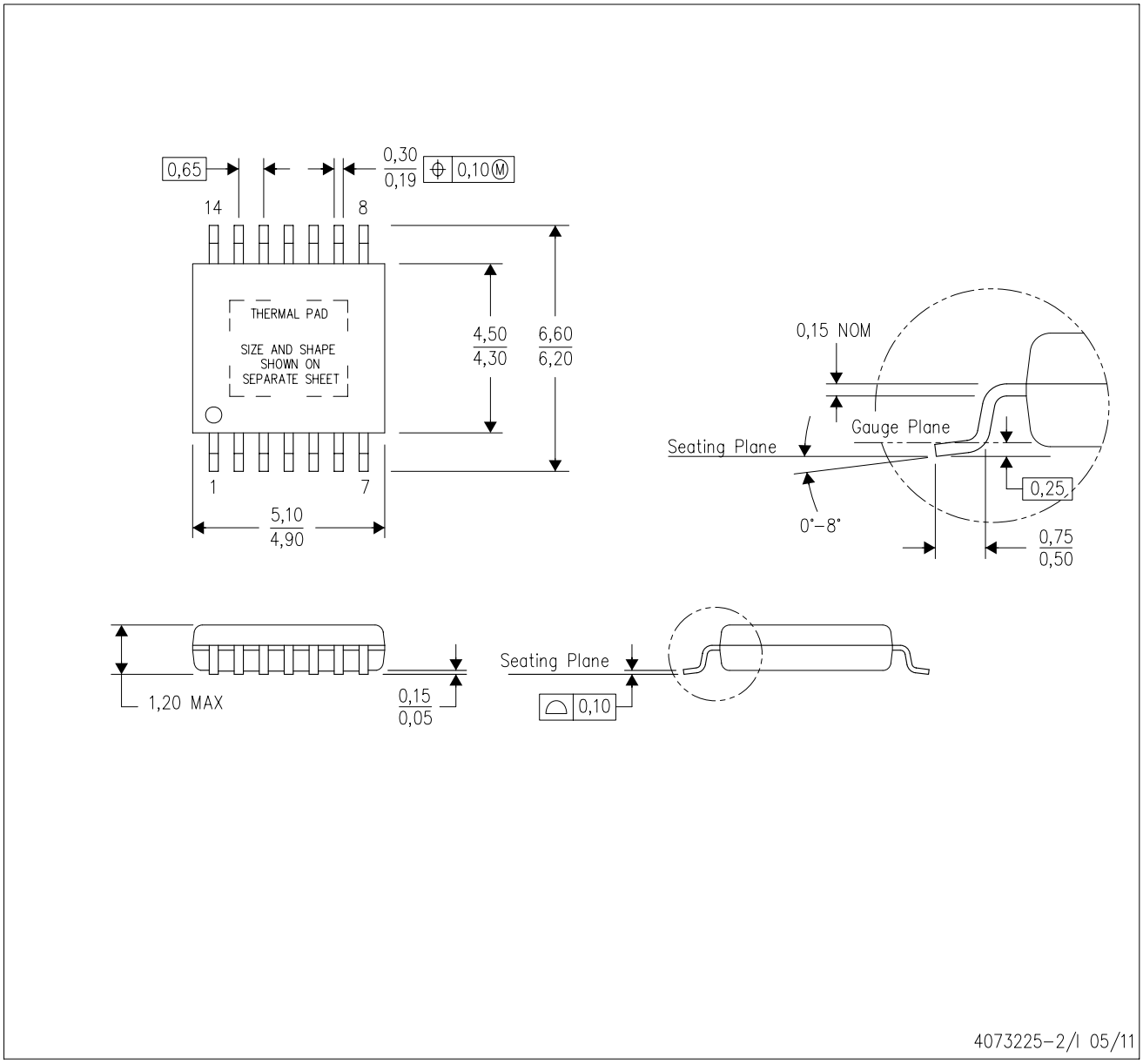

NOTES:
A. All linear dimensions are in millimeters.
B. This drawing is subject to change without notice.
C. Body dimensions do not include mold flash or protrusions. Mold flash and protrusion shall not exceed 0.15 per side.
D. This package is designed to be soldered to a thermal pad on the board. Refer to Technical Brief, PowerPad Thermally Enhanced Package, Texas Instruments Literature No. SLMA002 for information regarding recommended board layout. This document is available at www.ti.com <http://www.ti.com>.
E. See the additional figure in the Product Data Sheet for details regarding the exposed thermal pad features and dimensions.
E. Falls within JEDEC MO–153

PowerPAD is a trademark of Texas Instruments.

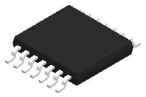

PACKAGE OUTLINE

PWP0014H

PowerPAD™ TSSOP - 1.2 mm max height

PLASTIC SMALL OUTLINE

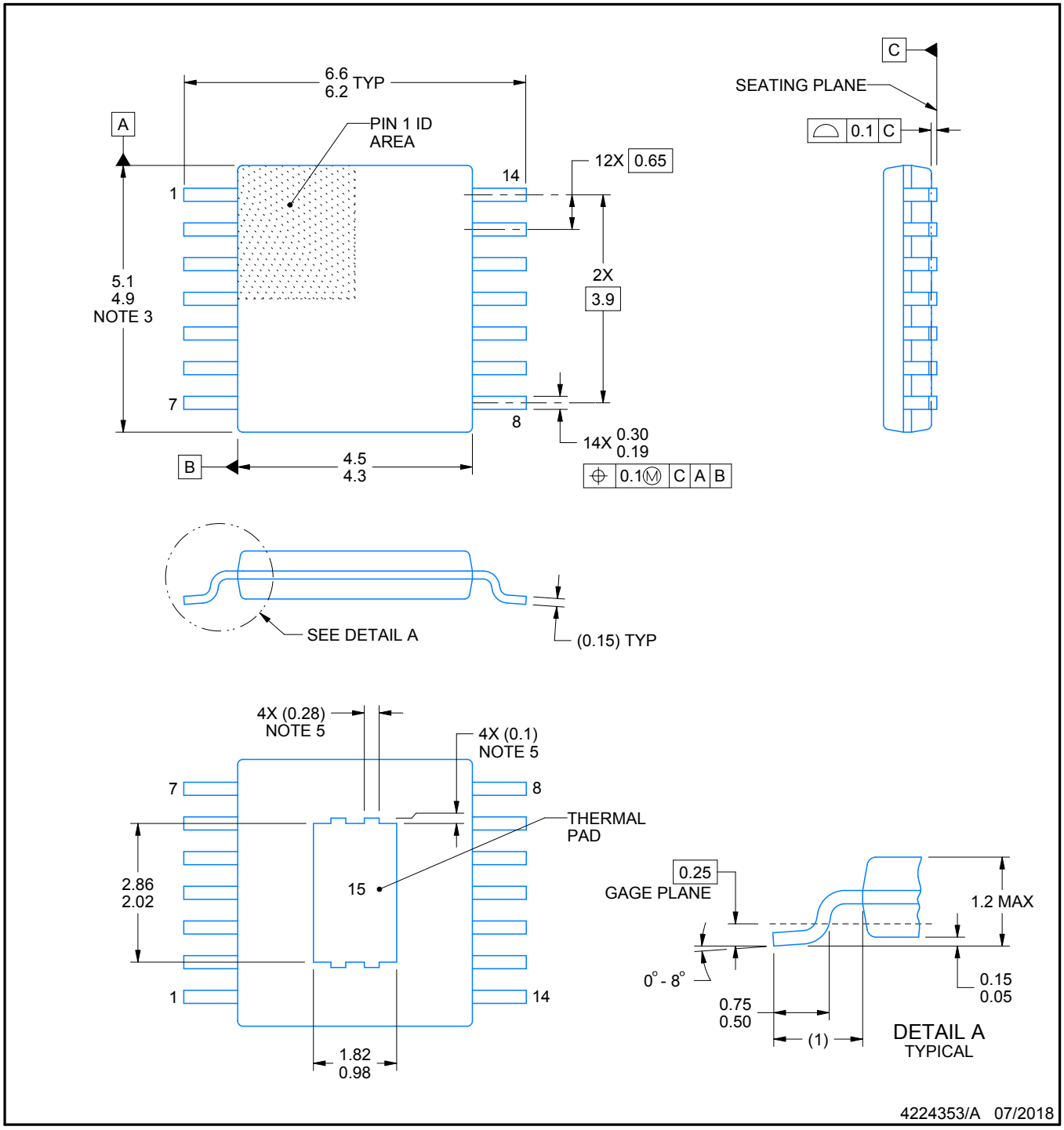

PowerPAD is a trademark of Texas Instruments.

NOTES:

1. All linear dimensions are in millimeters. Any dimensions in parenthesis are for reference only. Dimensioning and tolerancing per ASME Y14.5M.
2. This drawing is subject to change without notice.
3. This dimension does not include mold flash, protrusions, or gate burrs. Mold flash, protrusions, or gate burrs shall not exceed 0.15 mm per side.
4. Reference JEDEC registration MO-153.
5. Features may differ and may not be present.

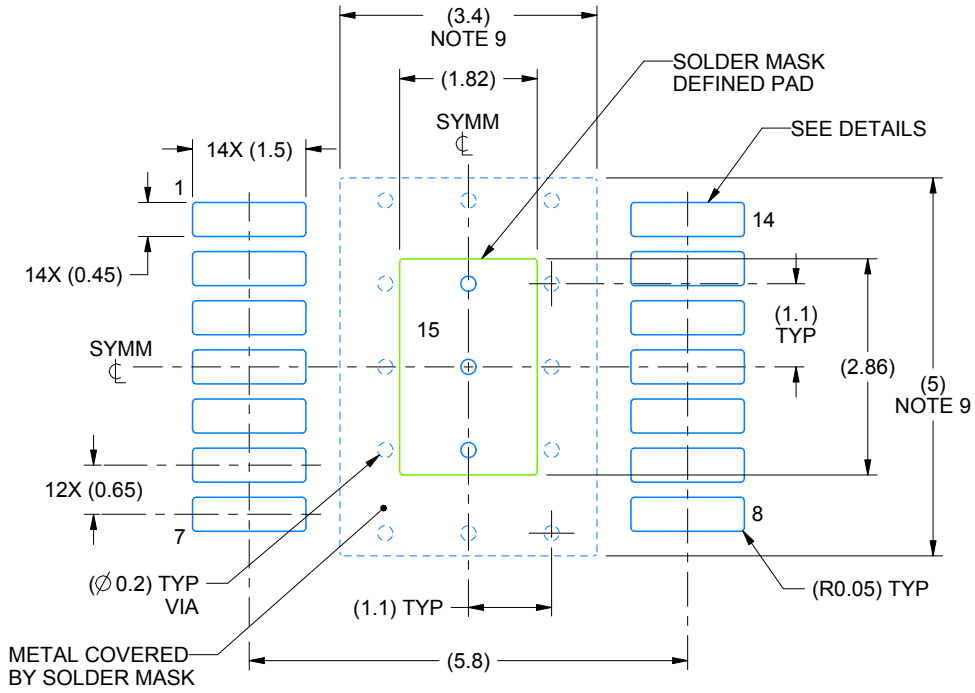

LAND PATTERN EXAMPLE
SCALE:10X

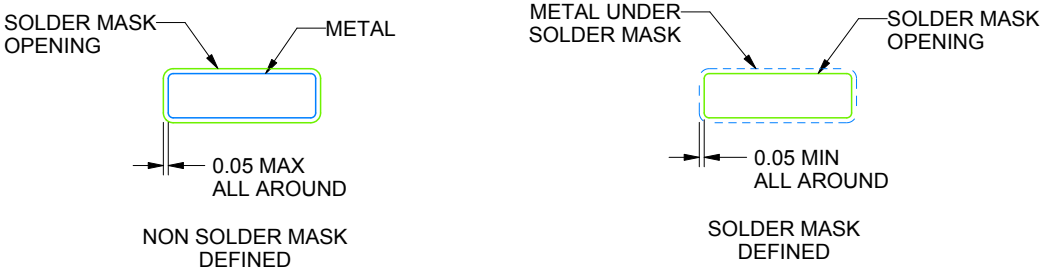

SOLDER MASK DETAILS
PADS 1-14

/A 07/2018

NOTES: (continued)

6. Publication IPC-7351 may have alternate designs.
7. Solder mask tolerances between and around signal pads can vary based on board fabrication site.
8. This package is designed to be soldered to a thermal pad on the board. For more information, see Texas Instruments literature numbers SLMA002 (www.ti.com/lit/slma002) and SLMA004 (www.ti.com/lit/slma004).
9. Size of metal pad may vary due to creepage requirement.

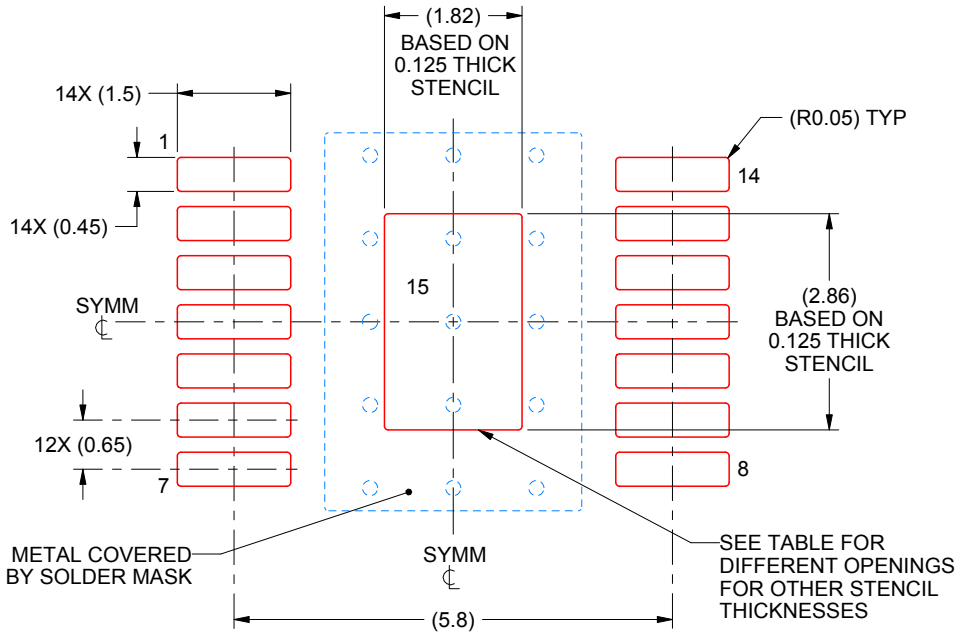

SOLDER PASTE EXAMPLE
EXPOSED PAD
100% PRINTED SOLDER COVERAGE BY AREA
SCALE:10X

STENCIL THICKNESS	SOLDER STENCIL OPENING
0.1	2.03 X 3.20
0.125	1.86 X 2.86 (SHOWN)
0.15	1.66 X 2.61
0.175	1.54 X 2.42

4224353/A 07/2018

NOTES: (continued)

10. Laser cutting apertures with trapezoidal walls and rounded corners may offer better paste release. IPC-7525 may have alternate design recommendations.
11. Board assembly site may have different recommendations for stencil design.

GENERIC PACKAGE VIEW

DRR 12 WSON - 0.8 mm max height

PLASTIC SMALL OUTLINE - NO LEAD

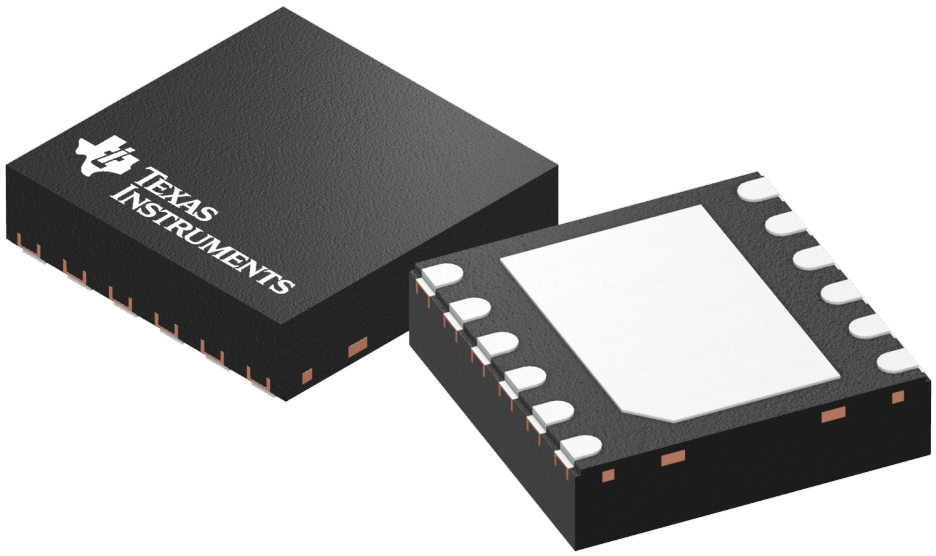

Images above are just a representation of the package family, actual package may vary.
Refer to the product data sheet for package details.

4223490/A

PACKAGE OUTLINE

DRR0012A

WSON - 0.8 mm max height

PLASTIC SMALL OUTLINE - NO LEAD

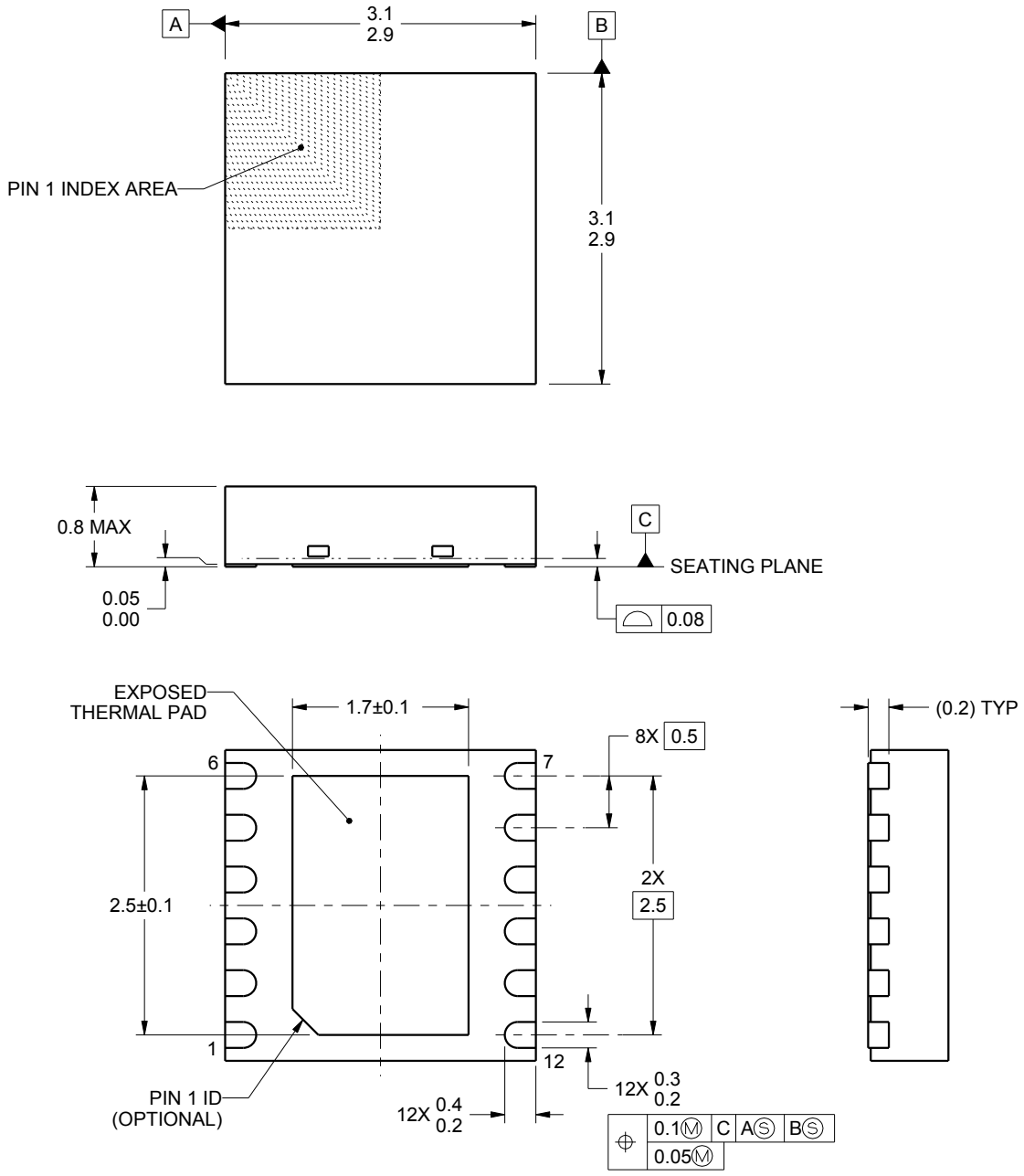

NOTES:

1. All linear dimensions are in millimeters. Any dimensions in parenthesis are for reference only. Dimensioning and tolerancing per ASME Y14.5M.
2. This drawing is subject to change without notice.
3. The package thermal pad must be soldered to the printed circuit board for thermal and mechanical performance.

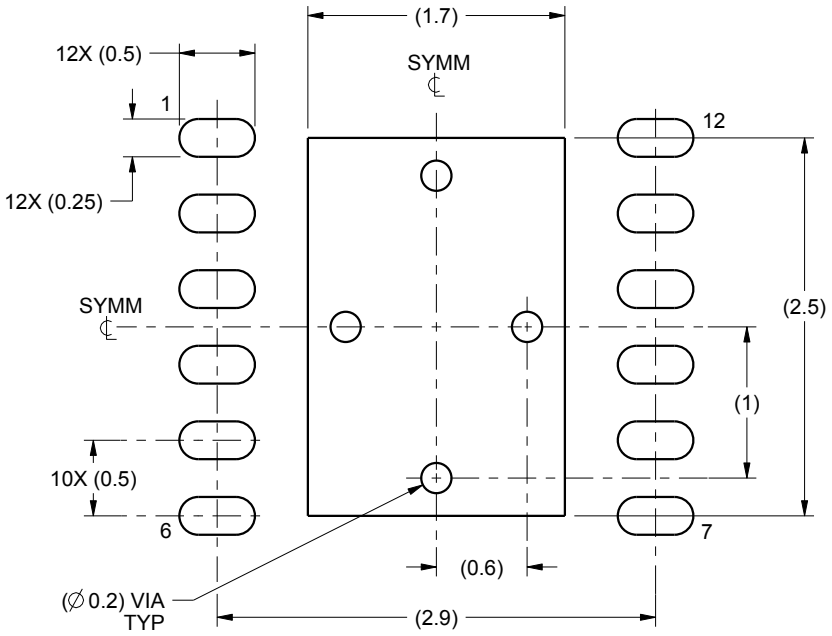

LAND PATTERN EXAMPLE
SCALE:20X

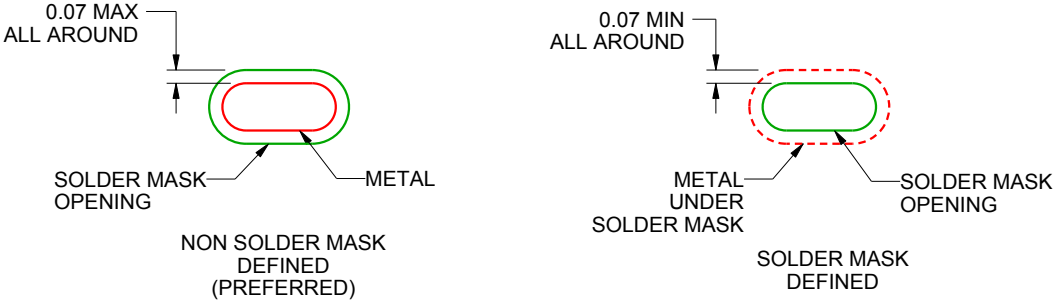

SOLDER MASK DETAILS

4221617/A 09/2014

NOTES: (continued)

4. This package is designed to be soldered to a thermal pad on the board. For more information, see Texas Instruments literature number SLUA271 (www.ti.com/lit/slua271).

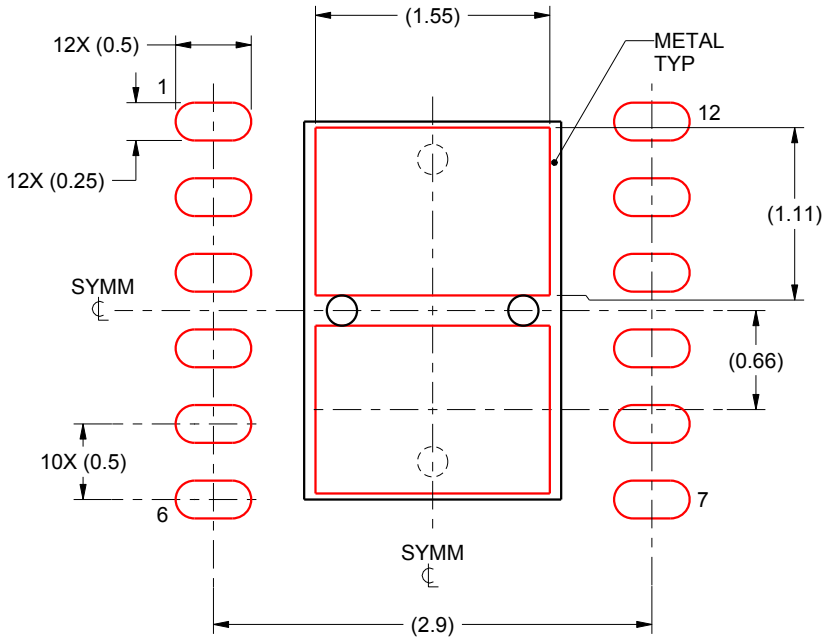

SOLDER PASTE EXAMPLE
BASED ON 0.125 mm THICK STENCIL

EXPOSED PAD
81% PRINTED SOLDER COVERAGE BY AREA
SCALE:20X

4221617/A 09/2014

NOTES: (continued)

5. Laser cutting apertures with trapezoidal walls and rounded corners may offer better paste release. IPC-7525 may have alternate design recommendations.

重要声明和免责声明

TI 均以“原样”提供技术性及可靠性数据（包括数据表）、设计资源（包括参考设计）、应用或其他设计建议、网络工具、安全信息和其他资源，不保证其中不含任何瑕疵，且不做任何明示或暗示的担保，包括但不限于对适销性、适合某特定用途或不侵犯任何第三方知识产权的暗示担保。

所述资源可供专业开发人员应用TI 产品进行设计使用。您将对以下行为独自承担全部责任：(1) 针对您的应用选择合适的TI 产品；(2) 设计、验证并测试您的应用；(3) 确保您的应用满足相应标准以及任何其他安全、安保或其他要求。所述资源如有变更，恕不另行通知。TI 对您使用所述资源的授权仅限于开发资源所涉及TI 产品的相关应用。除此之外不得复制或展示所述资源，也不提供其它TI或任何第三方的知识产权授权许可。如因使用所述资源而产生任何索赔、赔偿、成本、损失及债务等，TI对此概不负责，并且您须赔偿由此对TI 及其代表造成的损害。

TI 所提供产品均受TI 的销售条款 (http://www.ti.com.cn/zh-cn/legal/termsofsale.html) 以及ti.com.cn上或随附TI产品提供的其他可适用条款的约束。TI提供所述资源并不扩展或以其他方式更改TI 针对TI 产品所发布的可适用的担保范围或担保免责声明。

邮寄地址：上海市浦东新区世纪大道 1568 号中建大厦 32 楼，邮政编码：200122
Copyright © 2019 德州仪器半导体技术（上海）有限公司