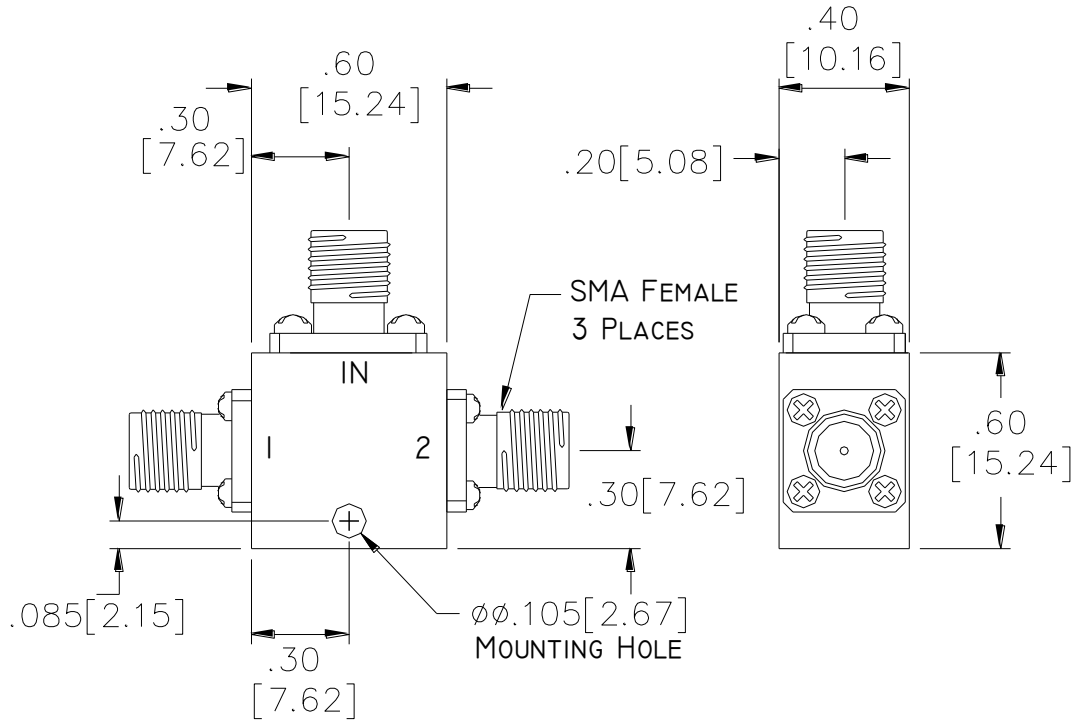

Electrical: Specifications:

Frequency Range:	DC–12.4		Ghz
Insertion Loss:	6+1.00	dB	Max
Amplitude Balance:	0.4	dB	Max
Isolation:	--	dB	Min
Phase Balance:	3.0	Deg.	Max
VSWR Input:	1.30:1		Max
VSWR Output:	1.30:1		Max
Power dividing at input:	0.5	Watts	Max

Splitting loss for 2-way resistive divider is 6.0 dB

SigaTek

423 Black Oak Ridge Rd.
Wayne, NJ 07470
Ph: 973-706-8475, Fax: 973-832-4435
www.sigatek.com

SP10R2F

2-way Resistive Power Divider

Dimensions are in inches and (mm)
Decimal Tolerance:
2 place +- 0.020
3 place +- 0.010

CAGE CODE : 69UC1

Notes: All dimensions are typical unless they are specified.
Specifications are subject to change at any time without any notice.
Copy or distribution of this drawing in not allowed without Sigatek's approval.