Dual Very Low Noise, Differential Amplifier and 2.5MHz Lowpass Filter

FEATURES

- Dual Differential Amplifier with 2.5MHz Lowpass Filters
  - 4th Order Filters
  - Approximates Chebyshev Response
  - Guaranteed Phase and Gain Matching
  - Resistor-Programmable Differential Gain
- >86dB Signal-to-Noise (3V Supply, $1V_{RMS}$ Output)
- Low Distortion (1MHz, $1V_{RMS}$ Output, 800Ω Load)
  - HD2: 92dBc
  - HD3: 88dBc
- Specified for Operation with 3V, 5V and ±5V Supplies
- Fully Differential Inputs and Outputs
- Adjustable Output Common Mode Voltage
- Small 4mm × 7mm × 0.75mm QFN Package

APPLICATIONS

- Dual Differential ADC Driver and Filter
- Single-Ended to Differential Converter
- Matched, Dual, Differential Gain or Filter Stage
- Common Mode Translation of Differential Signals
- High Speed ADC Antialiasing and DAC Smoothing in Wireless Infrastructure or Networking Applications
- High Speed Test and Measurement Equipment
- Medical Imaging

DESCRIPTION

The LT®6604-2.5 consists of two matched, fully differential amplifiers, each with a 4th order, 2.5MHz lowpass filter. The fixed frequency lowpass filter approximates a Chebyshev response. By integrating a filter and a differential amplifier, distortion and noise are made exceptionally low. At unity gain, the measured in-band signal-to-noise ratio is an impressive 86dB. At higher gains, the input referred noise decreases, allowing the part to process smaller input differential signals without significantly degrading the signal-to-noise ratio.

Gain and phase are well matched between the two channels. Gain for each channel is independently programmed using two external resistors. The LT6604-2.5 enables level shifting by providing an adjustable output common mode voltage, making it ideal for directly interfacing to ADCs. The LT6604-2.5 is fully specified for 3V operation. The differential design enables outstanding performance up to a $4V_{P-P}$ signal level for a single 3V supply.

See the back page of this datasheet for a complete list of related single and dual differential amplifiers with integrated 2.5MHz to 20MHz lowpass filters.

, LT, LTC and LTM are registered trademarks of Linear Technology Corporation. All other trademarks are the property of their respective owners.v

TYPICAL APPLICATION

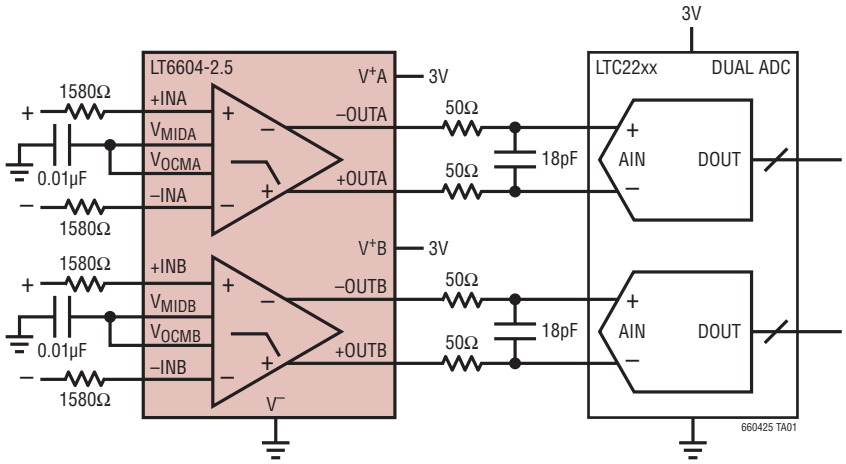

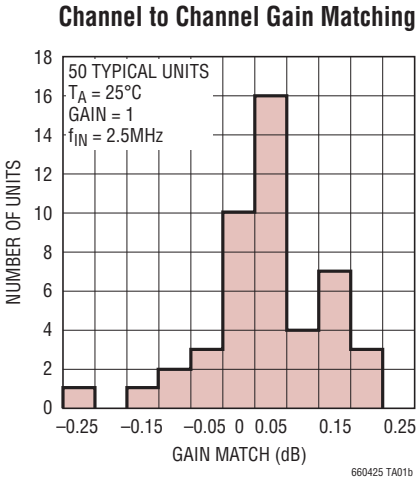

ABSOLUTE MAXIMUM RATINGS

(Note 1)

Total Supply Voltage 11V
Operating Temperature Range (Note 6).... –40°C to 85°C
Specified Temperature Range (Note 7) .... –40°C to 85°C
Junction Temperature ..... 150°C
Storage Temperature Range..... –65°C to 150°C
Input Voltage
+IN, –IN, V_{OCM}, V_{MID} (Note 8) ..... $\pm V_S$
Input Current
+IN, –IN, V_{OCM}, V_{MID} (Note 8) .....±10mA

PIN CONFIGURATION

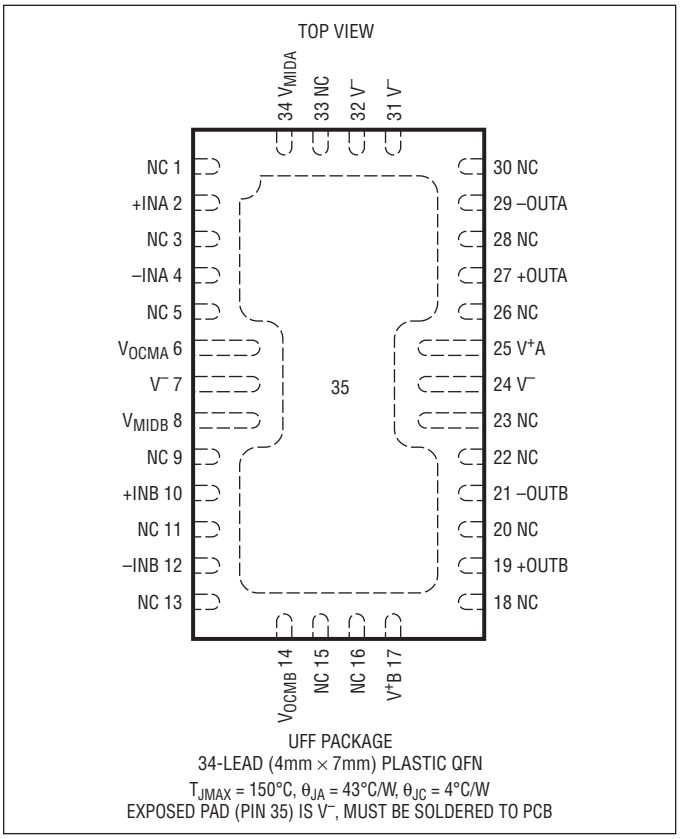

UFF PACKAGE
34-LEAD (4mm × 7mm) PLASTIC QFN
T_{JMAX} = 150°C, θ_{JA} = 43°C/W, θ_{JC} = 4°C/W
EXPOSED PAD (PIN 35) IS V–, MUST BE SOLDERED TO PCB

ORDER INFORMATION

LEAD FREE FINISH	TAPE AND REEL	PART MARKING*	PACKAGE DESCRIPTION	SPECIFIED TEMPERATURE RANGE
LT6604CUFF-2.5#PBF	LT6604CUFF-2.5#TRPBF	60425	34-Lead (4mm × 7mm) Plastic QFN	0°C to 70°C
LT6604IUFF-2.5#PBF	LT6604IUFF-2.5#TRPBF	60425	34-Lead (4mm × 7mm) Plastic QFN	–40°C to 85°C

Consult LTC Marketing for parts specified with wider operating temperature ranges. *The temperature grade is identified by a label on the shipping container.
Consult LTC Marketing for information on non-standard lead based finish parts.

For more information on lead free part marking, go to: http://www.linear.com/leadfree/
For more information on tape and reel specifications, go to: http://www.linear.com/tapeandreel/

ELECTRICAL CHARACTERISTICS

The ● denotes the specifications which apply over the full operating temperature range, otherwise specifications are at T_A = 25°C. Unless otherwise specified V_S = 5V (V^+ = 5V, V^- = 0V), R_{IN} = 1580Ω, and R_{LOAD} = 1k.

PARAMETER	CONDITIONS		MIN	TYP	MAX	UNITS
Filter Gain Either Channel, V_S = 3V	V_{IN} = 2V_{P-P}, f_{IN} = DC to 260kHz		–0.5	0.1	0.4	dB
	V_{IN} = 2V_{P-P}, f_{IN} = 700kHz (Gain Relative to 260kHz)	●	–0.15	0	0.1	dB
	V_{IN} = 2V_{P-P}, f_{IN} = 1.9MHz (Gain Relative to 260kHz)	●	–0.2	0.2	0.6	dB
	V_{IN} = 2V_{P-P}, f_{IN} = 2.2MHz (Gain Relative to 260kHz)	●	–0.6	0.1	0.5	dB
	V_{IN} = 2V_{P-P}, f_{IN} = 2.5MHz (Gain Relative to 260kHz)	●	–2.1	–0.9	0	dB
	V_{IN} = 2V_{P-P}, f_{IN} = 7.5MHz (Gain Relative to 260kHz)	●		–34	– 31	dB
	V_{IN} = 2V_{P-P}, f_{IN} = 12.5MHz (Gain Relative to 260kHz)	●		–51		dB

ELECTRICAL CHARACTERISTICS

The ● denotes the specifications which apply over the full operating temperature range, otherwise specifications are at T_A = 25°C. Unless otherwise specified V_S = 5V (V^+ = 5V, V^- = 0V), R_{IN} = 1580Ω, and R_{LOAD} = 1k.

PARAMETER	CONDITIONS		MIN	TYP	MAX	UNITS
Matching of Filter Gain, V_S = 3V	V_{IN} = $2V_{P-P}$, f_{IN} = DC to 260kHz			0.04	0.4	dB
	V_{IN} = $2V_{P-P}$, f_{IN} = 700kHz (Gain Relative to 260kHz)	●		0.005	0.1	dB
	V_{IN} = $2V_{P-P}$, f_{IN} = 1.9MHz (Gain Relative to 260kHz)	●		0.02	0.3	dB
	V_{IN} = $2V_{P-P}$, f_{IN} = 2.2MHz (Gain Relative to 260kHz)	●		0.03	0.4	dB
	V_{IN} = $2V_{P-P}$, f_{IN} = 2.5MHz (Gain Relative to 260kHz)	●		0.05	0.6	dB
	V_{IN} = $2V_{P-P}$, f_{IN} = 7.5MHz (Gain Relative to 260kHz)	●		0.15	1.1	dB
	V_{IN} = $2V_{P-P}$, f_{IN} = 12.5MHz (Gain Relative to 260kHz)	●		0.05	2.8	dB
Matching of Filter Phase, V_S = 3V	V_{IN} = $2V_{P-P}$, f_{IN} = 700kHz	●		0.2	1.5	deg
	V_{IN} = $2V_{P-P}$, f_{IN} = 1.9MHz	●		0.6	3.5	deg
	V_{IN} = $2V_{P-P}$, f_{IN} = 2.2MHz	●		0.8	4.5	deg
Filter Gain Either Channel, V_S = 5V	V_{IN} = $2V_{P-P}$, f_{IN} = DC to 260kHz		–0.5	–0.1	0.4	dB
	V_{IN} = $2V_{P-P}$, f_{IN} = 700kHz (Gain Relative to 260kHz)	●	–0.15	0	0.1	dB
	V_{IN} = $2V_{P-P}$, f_{IN} = 1.9MHz (Gain Relative to 260kHz)	●	–0.2	0.2	0.6	dB
	V_{IN} = $2V_{P-P}$, f_{IN} = 2.2MHz (Gain Relative to 260kHz)	●	–0.6	0.1	0.5	dB
	V_{IN} = $2V_{P-P}$, f_{IN} = 2.5MHz (Gain Relative to 260kHz)	●	–2.1	–0.9	0	dB
	V_{IN} = $2V_{P-P}$, f_{IN} = 7.5MHz (Gain Relative to 260kHz)	●		–34	– 31	dB
	V_{IN} = $2V_{P-P}$, f_{IN} = 12.5MHz (Gain Relative to 260kHz)	●		–51		dB
Matching of Filter Gain, V_S = 5V	V_{IN} = $2V_{P-P}$, f_{IN} = DC to 260kHz			0.04	0.4	dB
	V_{IN} = $2V_{P-P}$, f_{IN} = 700kHz (Gain Relative to 260kHz)	●		0.005	0.1	dB
	V_{IN} = $2V_{P-P}$, f_{IN} = 1.9MHz (Gain Relative to 260kHz)	●		0.02	0.3	dB
	V_{IN} = $2V_{P-P}$, f_{IN} = 2.2MHz (Gain Relative to 260kHz)	●		0.03	0.4	dB
	V_{IN} = $2V_{P-P}$, f_{IN} = 2.5MHz (Gain Relative to 260kHz)	●		0.05	0.6	dB
	V_{IN} = $2V_{P-P}$, f_{IN} = 7.5MHz (Gain Relative to 260kHz)	●		0.15	1.1	dB
	V_{IN} = $2V_{P-P}$, f_{IN} = 12.5MHz (Gain Relative to 260kHz)	●		0.05	2.8	dB
Matching of Filter Phase, V_S = 5V	V_{IN} = $2V_{P-P}$, f_{IN} = 700kHz	●		0.2	1.5	deg
	V_{IN} = $2V_{P-P}$, f_{IN} = 1.9MHz	●		0.6	3.5	deg
	V_{IN} = $2V_{P-P}$, f_{IN} = 2.2MHz	●		0.8	4.5	deg
Filter Gain Either Channel, V_S = ±5V	V_{IN} = $2V_{P-P}$, f_{IN} = DC to 260kHz		–0.6	–0.1	0.4	dB
Filter Gain, R_{IN} = 402Ω	V_{OUT} = $2V_{P-P}$, f_{IN} = DC to 260kHz					
	V_S = 3V		11.3	11.8	12.3	dB
	V_S = 5V		11.3	11.8	12.3	dB
	V_S = ±5V		11.2	11.7	12.2	dB
Filter Gain Temperature Coefficient (Note 2)	f_{IN} = 260kHz, V_{IN} = $2V_{P-P}$			780		ppm/°C
Noise	Noise BW = 10kHz to 2.5MHz, R_{IN} = 1580Ω			51		μV_{RMS}
Distortion (Note 4)	V_{IN} = $1V_{RMS}$, f_{IN} = 1MHz, R_L = 800Ω					
	2nd Harmonic			92		dBc
	3rd Harmonic			88		dBc
Channel Separation (Note 9)	V_{IN} = $2V_{P-P}$, f_{IN} = 1MHz			–119		dB
Differential Output Swing	Measured Between OUT+ and OUT–, V_{OCM} Shorted to V_{MID}					
	V_S = 5V	●	8.8	9.3		V_{P-P_DIFF}
	V_S = 3V	●	5.1	5.5		V_{P-P_DIFF}

ELECTRICAL CHARACTERISTICS

The ● denotes the specifications which apply over the full operating temperature range, otherwise specifications are at T_A = 25°C. Unless otherwise specified V_S = 5V (V^+ = 5V, V^- = 0V), R_{IN} = 1580Ω, and R_{LOAD} = 1k.

PARAMETER	CONDITIONS		MIN	TYP	MAX	UNITS
Input Bias Current	Average of IN+ and IN–	●	–35	–15		µA
Input Referred Differential Offset	R_{IN} = 1580Ω, Differential Gain = 1V/V					
	V_S = 3V	●		5	25	mV
	V_S = 5V	●		5	30	mV
	V_S = ±5V	●		5	35	mV
	R_{IN} = 402Ω, Differential Gain = 4V/V					
	V_S = 3V	●		3	13	mV
	V_S = 5V	●		3	16	mV
	V_S = ±5V	●		3	20	mV
Differential Offset Drift				10		µV/°C
Input Common Mode Voltage (Note 3)	Differential Input = 500mV_{P-P}, R_{IN} ≥402Ω					
	V_S = 3V	●	0		1.5	V
	V_S = 5V	●	0		3	V
	V_S = ±5V	●	–2.5		1	V
Output Common Mode Voltage (Note 5)	Differential Output = 2V_{P-P}, V_{MID} at Mid Supply					
	V_S = 3V	●	1		1.5	V
	V_S = 5V	●	1.5		3	V
	V_S = ±5V	●	– 1		2	V
Output Common Mode Offset (with Respect to V_{OCM})	V_S = 3V	●	–25	10	45	mV
	V_S = 5V	●	–30	5	45	mV
	V_S = ±5V	●	–55	–10	35	mV
Common Mode Rejection Ratio				63		dB
Voltage at V_{MID}	V_S = 5V	●	2.45	2.51	2.56	V
	V_S = 3V			1.5		V
V_{MID} Input Resistance		●	4.3	5.7	7.7	kΩ
V_{OCM} Bias Current	V_{OCM} = V_{MID} = V_S/2					
	V_S = 5V	●	–15	–3		µA
	V_S = 3V	●	–10	–3		µA
Power Supply Current (Per Channel)	V_S = 3V, V_S = 5V			26	30	mA
	V_S = 3V, V_S = 5V	●			33	mA
	V_S = ±5V	●		28	36	mA

Note 1: Stresses beyond those listed under Absolute Maximum Ratings may cause permanent damage to the device. Exposure to any Absolute Maximum Rating condition for extended periods may affect device reliability and lifetime.

Note 2: This is the temperature coefficient of the internal feedback resistors assuming a temperature independent external resistor (R_{IN}).

Note 3: The input common mode voltage is the average of the voltages applied to the external resistors (R_{IN}).

Note 4: Distortion is measured differentially using a differential stimulus. The input common mode voltage, the voltage at V_{OCM}, and the voltage at V_{MID} are equal to one half of the total power supply voltage.

Note 5: Output common mode voltage is the average of the +OUT and –OUT voltages. The output common mode voltage is equal to V_{OCM}.

Note 6: The LT6604C-2.5 is guaranteed functional over the operating temperature range –40°C to 85°C.

Note 7: The LT6604C-2.5 is guaranteed to meet 0°C to 70°C specifications and is designed, characterized and expected to meet the extended temperature limits, but is not tested at –40°C to 85°C. The LT6604I-2.5 is guaranteed to meet specified performance from –40°C to 85°C.

Note 8: Input pins (+IN, –IN, V_{OCM} and V_{MID}) are protected by steering diodes to either supply. If the inputs should exceed either supply voltage, the input current should be limited to less than 10mA. In addition, the inputs +IN, –IN are protected by a pair of back-to-back diodes. If the differential input voltage exceeds 1.4V, the input current should be limited to less than 10mA

Note 9: Channel separation (the inverse of crosstalk) is measured by driving a signal into one input while terminating the other input. Channel separation is the ratio of the resulting output signal at the driven channel to the output at the channel that is not driven.

TYPICAL PERFORMANCE CHARACTERISTICS

Frequency Response

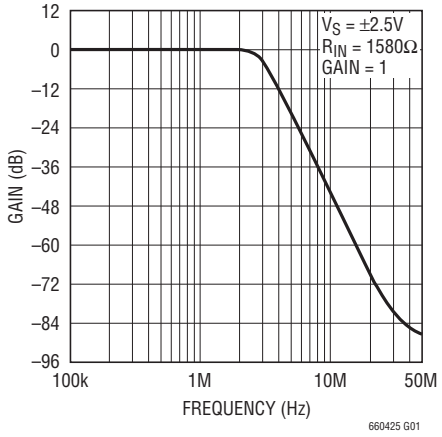

Passband Gain and Group Delay

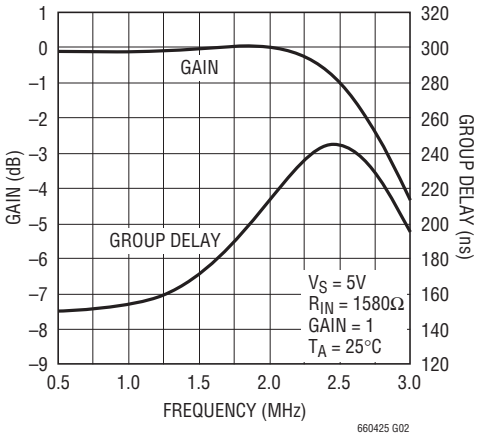

Passband Gain and Group Delay

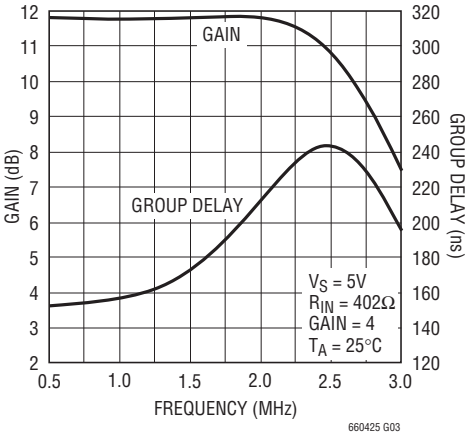

Output Impedance vs Frequency (OUT+ or OUT–)

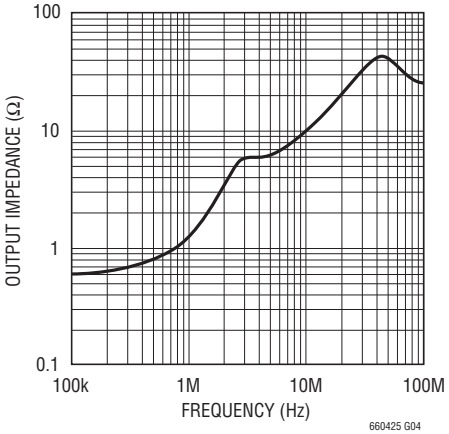

Common Mode Rejection Ratio

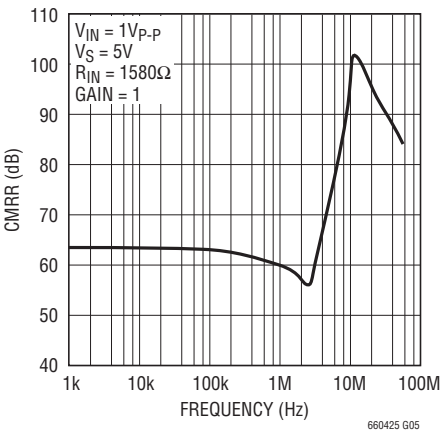

Power Supply Rejection Ratio

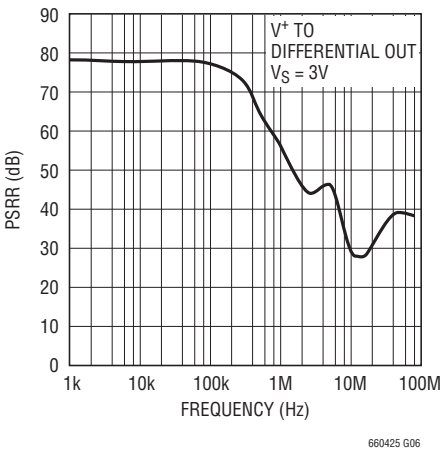

Distortion vs Frequency

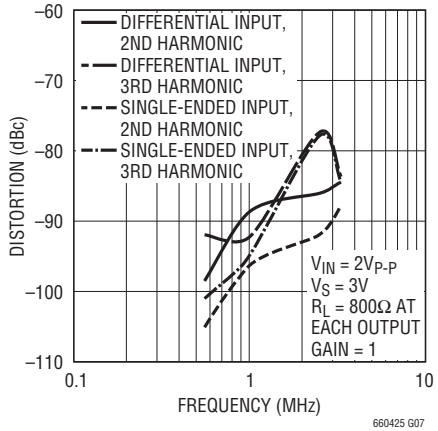

Distortion vs Frequency

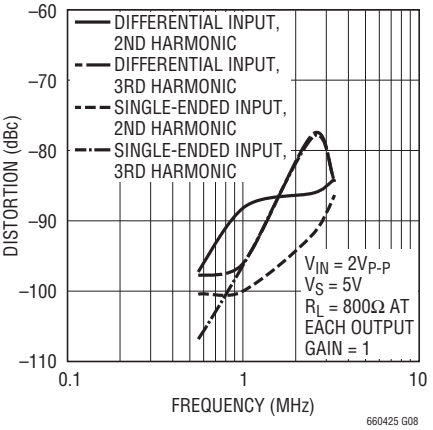

Distortion vs Frequency

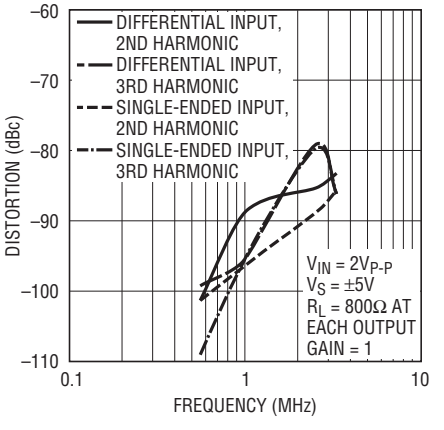

TYPICAL PERFORMANCE CHARACTERISTICS

Distortion vs Signal Level

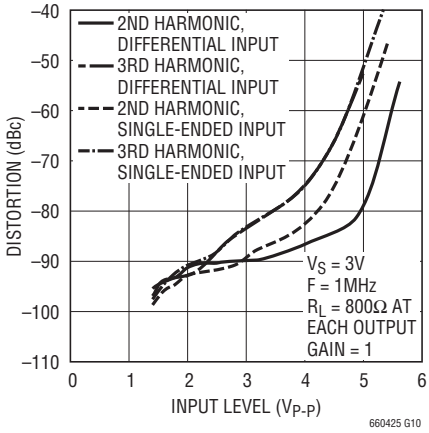

Distortion vs Signal Level

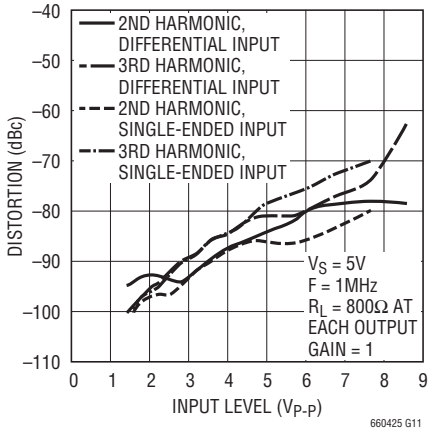

Distortion vs Signal Level

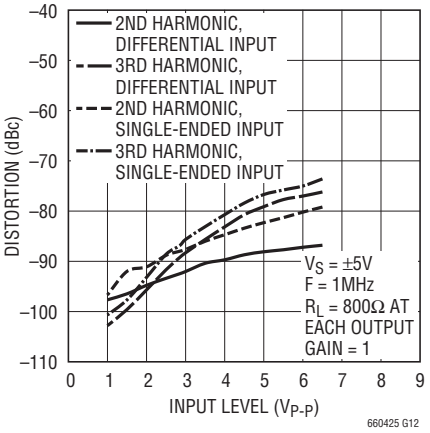

Distortion vs Input Common Mode Level

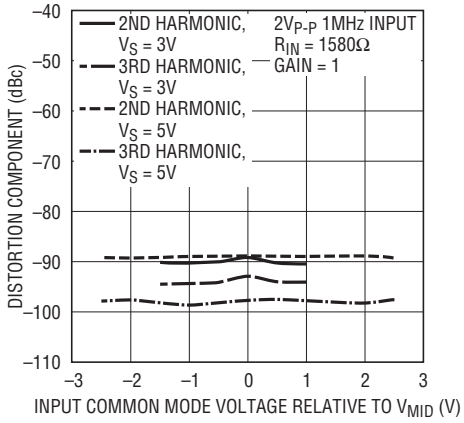

Distortion vs Input Common Mode Level

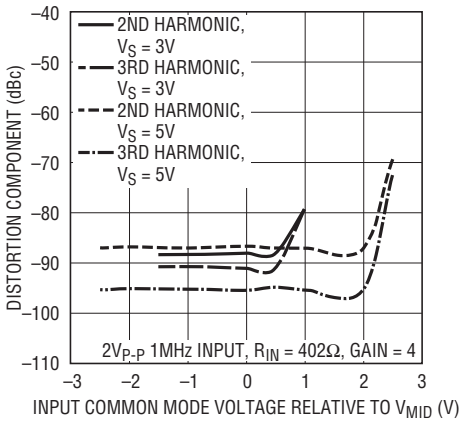

Distortion vs Output Common Mode Level

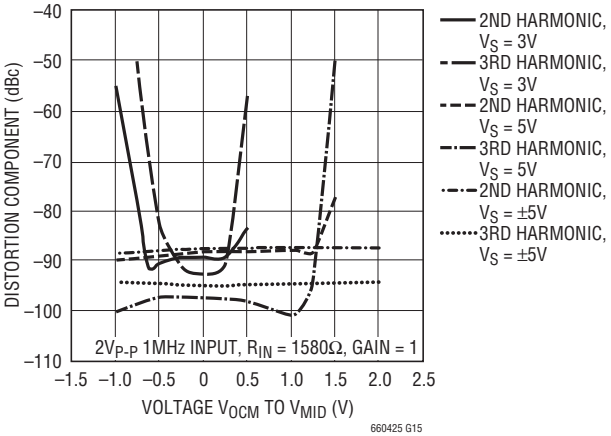

Single Channel Supply Current vs Total Supply Voltage

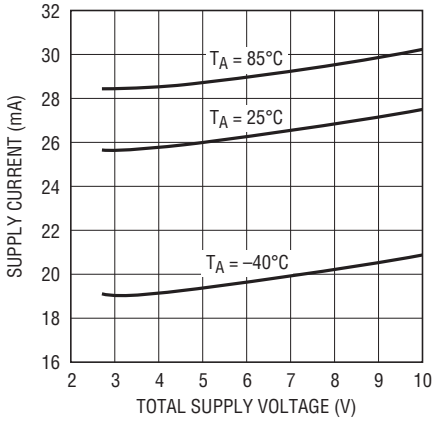

TYPICAL PERFORMANCE CHARACTERISTICS

Transient Response Gain = 1

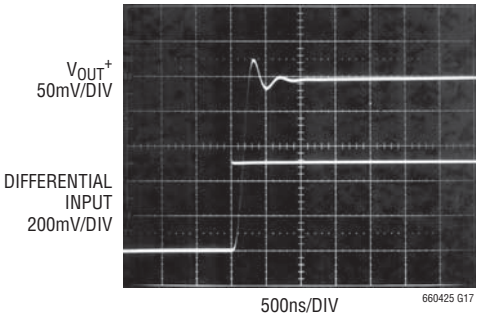

Channel Separation vs Frequency (Note 9)

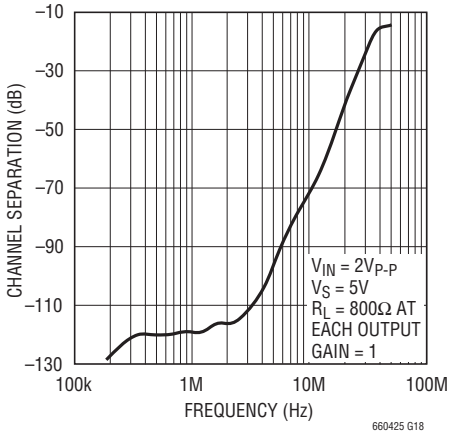

PIN FUNCTIONS

+INA, –INA (Pins 2, 4): Channel A Input Pins. Signals can be applied to either or both input pins through identical external resistors, R_{IN}. The DC gain from the differential inputs to the differential outputs is 1580Ω/R_{IN}.

V_{OCMA} (Pin 6): DC Common Mode Reference Voltage for the 2nd Filter Stage in channel A. Its value programs the common mode voltage of the differential output of the filter. Pin 6 is a high impedance input, which can be driven from an external voltage reference, or Pin 6 can be tied to Pin 34 on the PC board. Pin 6 should be bypassed with a 0.01µF ceramic capacitor unless it is connected to a ground plane.

V^- (Pins 7, 24, 31, 32, 35): Negative Power Supply Pin (can be ground).

V_{MIDB} (Pin 8): The V_{MIDB} pin is internally biased at mid-supply, see Block Diagram. For single supply operation the V_{MIDB} pin should be bypassed with a quality 0.01µF ceramic capacitor to V^-. For dual supply operation, Pin 8 can be bypassed or connected to a high quality DC ground. A ground plane should be used. A poor ground will increase noise and distortion. Pin 8 sets the output common mode voltage of the 1st stage of the filter in channel B. It has a 5.5kΩ impedance, and it can be overridden with an external low impedance voltage source.

+INB, –INB (Pins 10, 12): Channel B Input Pins. Signals can be applied to either or both input pins through identical external resistors, R_{IN}. The DC gain from differential inputs to the differential outputs is 1580Ω/R_{IN}.

V_{OCMB} (Pin 14): DC Common Mode Reference Voltage for the 2nd Filter Stage in Channel B. Its value programs the common mode voltage of the differential output of the filter. Pin 14 is a high impedance input, which can be driven from an external voltage reference, or Pin 14 can be tied to Pin 8 on the PC board. Pin 14 should be bypassed with a 0.01µF ceramic capacitor unless it is connected to a ground plane.

V^+A, V^+B (Pins 25, 17): Positive Power Supply Pins for Channels A and B. For a single 3.3V or 5V supply (V^- grounded) a quality 0.1µF ceramic bypass capacitor is required from each positive supply pin (V^+A, V^+B) to the negative supply pin (V^-). The bypass should be as close as possible to the IC. For dual supply applications, bypass the negative supply pins to ground and each of the positive supply pins (V^+A, V^+B) to ground with a quality 0.1µF ceramic capacitor.

+OUTB, –OUTB (Pins 19, 21): Output Pins. Pins 19 and 21 are the filter differential outputs for channel B. With a typical short-circuit current limit greater than ±40mA, each pin can drive a 100Ω and/or 50pF load to AC ground.

PIN FUNCTIONS

+OUTA, – OUTA (Pins 27, 29): Output Pins. Pins 27 and 29 are the filter differential outputs for channel A. With a typical short-circuit current greater than ±40mA, each pin can drive a 100Ω and/or 50pF load to AC ground.

V_{MIDA} (Pin 34): The V_{MIDA} pin is internally biased at mid-supply, see Block Diagram. For single supply operation the V_{MIDA} pin should be bypassed with a quality 0.01µF ceramic capacitor to V^-. For dual supply operation, Pin 34 can be bypassed or connected to a high quality DC ground. A ground plane should be used. A poor ground will increase noise and distortion. Pin 34 sets the output common mode voltage of the 1st stage of the filter in channel A. It has a 5.5kΩ impedance, and it can be overridden with an external low impedance voltage source.

Exposed Pad (Pin 35): V^-. The Exposed Pad must be soldered to the PCB. If V^- is separate from ground, tie the Exposed Pad to V^-.

BLOCK DIAGRAM

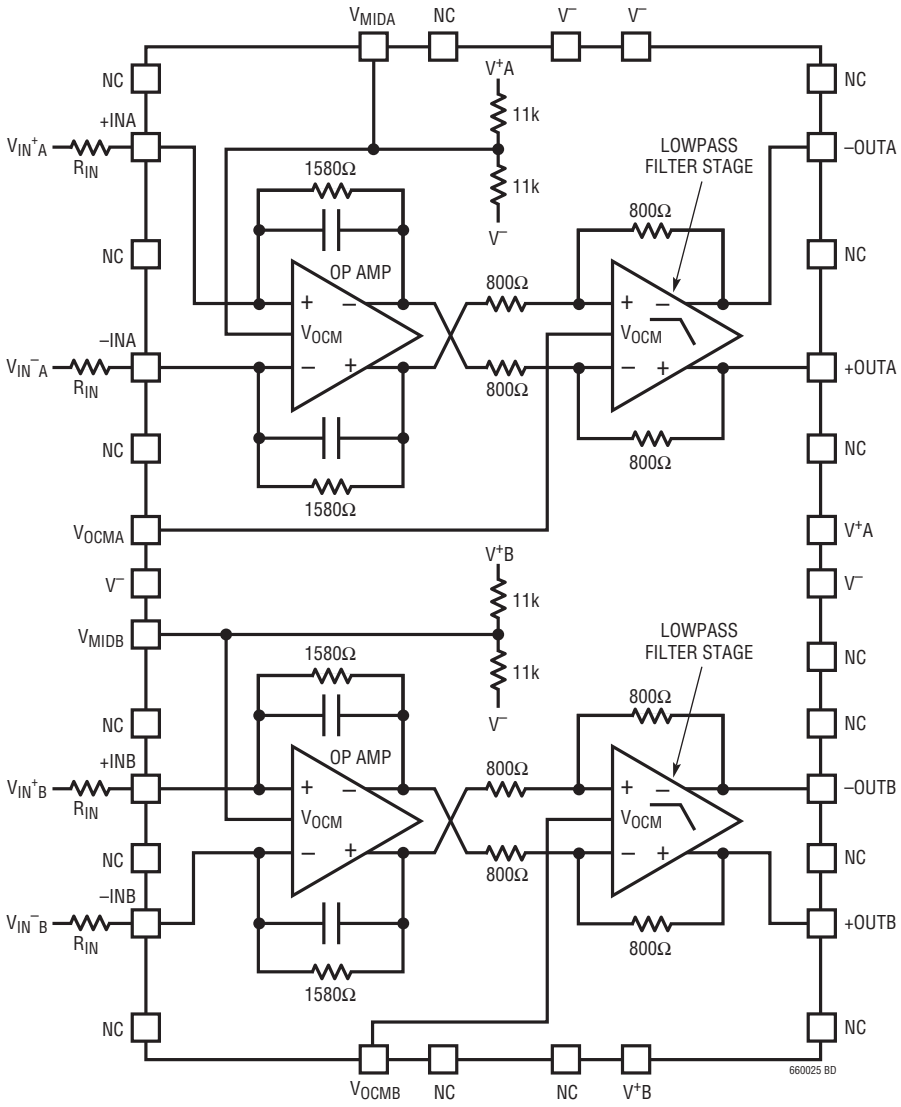

APPLICATIONS INFORMATION

Interfacing to the LT6604-2.5

Note: The LT6604-2.5 contains two identical lowpass filters. The following applications information only refers to one filter. The two filters are independent except that they share the same negative supply voltage V^-. The two filters can be used simultaneously by replicating the example circuits. The referenced pin numbers correspond to the A channel filter.

Each LT6604-2.5 channel requires two equal external resistors, R_{IN}, to set the differential gain to $1580\Omega/R_{IN}$. The inputs to the filter are the voltages V_{IN}^+ and V_{IN}^- presented to these external components, Figure 1. The difference between V_{IN}^+ and V_{IN}^- is the differential input voltage. The average of V_{IN}^+ and V_{IN}^- is the common mode input voltage. Similarly, the voltages V_{OUT}^+ and V_{OUT}^- appearing at pins 27 and 29 of the LT6604-2.5 are the filter outputs. The difference between V_{OUT}^+ and V_{OUT}^- is the differential output voltage. The average of V_{OUT}^+ and V_{OUT}^- is the common mode output voltage. Figure 1 illustrates the LT6604-2.5 operating with a single 3.3V supply and unity passband gain; the input signal is DC-coupled. The common mode input voltage is 0.5V, and the differential input voltage is $2V_{P-P}$. The common mode output voltage is 1.65V, and the differential output voltage is $2V_{P-P}$ for frequencies below 2.5MHz. The common mode output voltage is determined by the voltage at V_{OCM}. Since V_{OCM} is shorted to V_{MID}, the output common mode is the mid-supply voltage. In addition, the common mode input voltage can be equal to the mid-supply voltage of V_{MID}.

Figure 2 shows how to AC couple signals into the LT6604-2.5. In this instance, the input is a single-ended signal. AC-coupling allows the processing of single-ended or differential signals with arbitrary common mode levels. The 0.1µF coupling capacitor and the 1580Ω gain setting resistor form a high pass filter, attenuating signals below 1kHz. Larger values of coupling capacitors will proportionally reduce this highpass 3dB frequency.

In Figure 3 the LT6604-2.5 channel is providing 12dB of gain. The common mode output voltage is set to 2V.

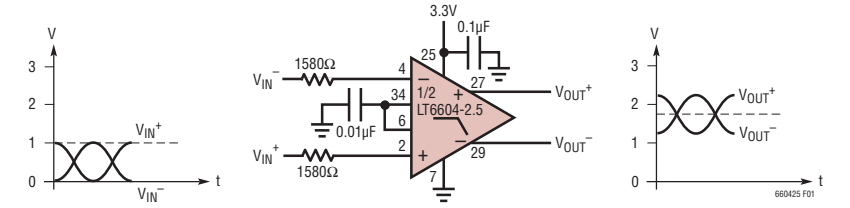

Figure 1

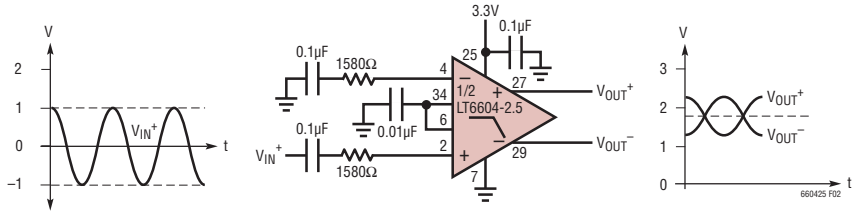

Figure 2

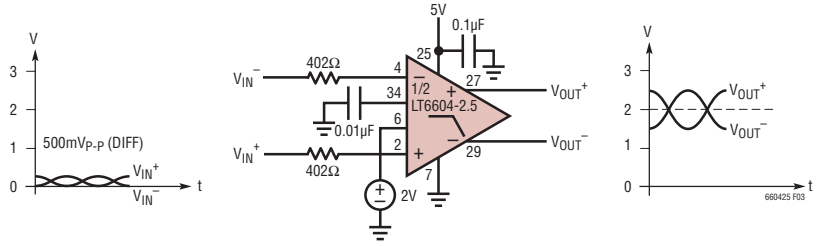

Figure 3

APPLICATIONS INFORMATION

Use Figure 4 to determine the interface between the LT6604-2.5 and a current output DAC. The gain, or "transimpedance," is defined as $A = V_{OUT}/I_{IN}$. To compute the transimpedance, use the following equation:

$$A = \frac{1580 \bullet R1}{(R1+R2)}(\Omega)$$

By setting R1 + R2 = 1580Ω, the gain equation reduces to A = R1(Ω). The voltage at the pins of the DAC is determined by R1, R2, the voltage on V_{MID} and the DAC output current. Consider Figure 4 with R1 = 49.9Ω and R2 = 1540Ω. The voltage at V_{MID}, for V_S = 3.3V, is 1.65V. The voltage at the DAC pins is given by:

$$V_{DAC} = V_{MID} \bullet \frac{R1}{R1+R2+1580} + I_{IN} \bullet \frac{R1 \bullet R2}{R1+R2}$$
$$= 26mV + I_{IN} \bullet 48.3\Omega$$

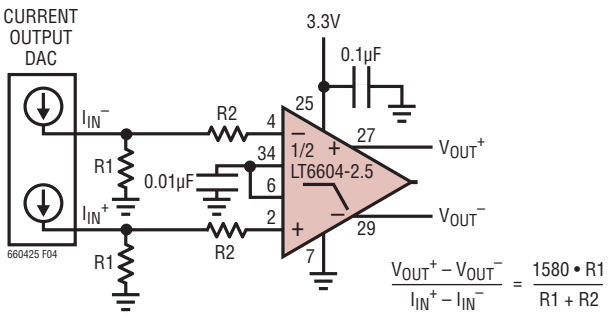

Figure 4

Evaluating the LT6604-2.5

The low impedance levels and high frequency operation of the LT6604-2.5 require some attention to the impedance matching networks between the LT6604-2.5 and other devices. The previous examples assume an ideal (0Ω) source impedance and a large (1k) load resistance. Among practical examples where impedance must be considered is the evaluation of the LT6604-2.5 with a network analyzer.

Figure 5 is a laboratory setup that can be used to characterize the LT6604-2.5 using single-ended instruments with 50Ω source impedance and 50Ω input impedance. For a 12dB gain configuration the LT6604-2.5 requires a 402Ω source resistance yet the network analyzer output is calibrated for a 50Ω load resistance. The 1:1 transformer,

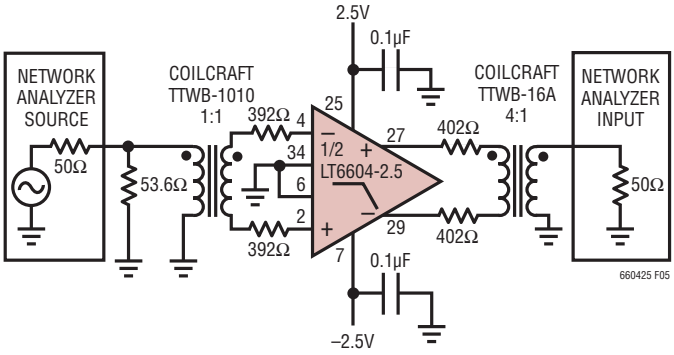

Figure 5

53.6Ω and 392Ω resistors satisfy the two constraints above. The transformer converts the single-ended source into a differential stimulus. Similarly, the output of the LT6604-2.5 will have lower distortion with larger load resistance yet the analyzer input is typically 50Ω. The 4:1 turns (16:1 impedance) transformer and the two 402Ω resistors of Figure 5, present the output of the LT6604-2.5 with a 1600Ω differential load, or the equivalent of 800Ω to ground at each output. The impedance seen by the network analyzer input is still 50Ω, reducing reflections in the cabling between the transformer and analyzer input.

Differential and Common Mode Voltage Ranges

The rail-to-rail output stage of the LT6604-2.5 can process large differential signal levels. On a 3V supply, the output signal can be $5.1V_{P-P}$. Similarly, a 5V supply can support signals as large as $8.8V_{P-P}$. To prevent excessive power dissipation in the internal circuitry, the user must limit differential signal levels to $9V_{P-P}$.

The two amplifiers inside the LT6604-2.5 channel have independent control of their output common mode voltage (see the "Block Diagram" section). The following guidelines will optimize the performance of the filter.

V_{MID} can be allowed to float, but it must be bypassed to an AC ground with a 0.01µF capacitor or instability may be observed. V_{MID} can be driven from a low impedance source, provided it remains at least 1.5V above V^- and at least 1.5V below V^+. An internal resistor divider sets the voltage of V_{MID}. While the internal 11k resistors are well matched, their absolute value can vary by ±20%. This should be taken into consideration when connecting an external resistor network to alter the voltage of V_{MID}.

APPLICATIONS INFORMATION

V_{OCM} can be shorted to V_{MID} for simplicity. If a different common mode output voltage is required, connect V_{OCM} to a voltage source or resistor network. For 3V and 3.3V supplies the voltage at V_{OCM} must be less than or equal to the mid supply level. For example, voltage (V_{OCM}) ≤ 1.65V on a single 3.3V supply. For power supply voltages higher than 3.3V the voltage at V_{OCM} can be set above mid supply, as shown in Table 1. The voltage on V_{OCM} should not be more than 1V below the voltage on V_{MID}. V_{OCM} is a high impedance input.

Table 1. Output Common Mode Range for Various Supplies

SUPPLY VOLTAGE	DIFFERENTIAL OUT VOLTAGE SWING	OUTPUT COMMON MODE RANGE FOR LOW DISTORTION
3V	$4V_{P-P}$	$1.4V \le V_{OCM} \le 1.6V$
	$2V_{P-P}$	$1V \le V_{OCM} \le 1.6V$
	$1V_{P-P}$	$0.75V \le V_{OCM} \le 1.6V$
5V	$8V_{P-P}$	$2.4V \le V_{OCM} \le 2.6V$
	$4V_{P-P}$	$1.5V \le V_{OCM} \le 3.5V$
	$2V_{P-P}$	$1V \le V_{OCM} \le 3.75V$
	$1V_{P-P}$	$0.75V \le V_{OCM} \le 3.75V$
±5V	$9V_{P-P}$	$-2V \le V_{OCM} \le 2V$
	$4V_{P-P}$	$-3.5V \le V_{OCM} \le 3.5V$
	$2V_{P-P}$	$-3.75V \le V_{OCM} \le 3.75V$
	$1V_{P-P}$	$-4.25V \le V_{OCM} \le 3.75V$

NOTE: The voltage at V_{OCM} should not be more than 1V below the voltage at V_{MID}. To achieve some of the output common mode ranges shown in the table, the voltage at V_{MID} must be set externally to a value below mid supply.

The LT6604-2.5 was designed to process a variety of input signals including signals centered on the mid-supply voltage and signals that swing between ground and a positive voltage in a single supply system (Figure 1). The allowable range of the input common mode voltage (the average of V_{IN}^+ and V_{IN}^- in Figure 1) is determined by the power supply level and gain setting (see "Electrical Characteristics").

Common Mode DC Currents

In applications like Figure 1 and Figure 3 where the LT6604-2.5 not only provides lowpass filtering but also level shifts the common mode voltage of the input signal, DC currents will be generated through the DC path between input and output terminals. Minimize these currents to decrease power dissipation and distortion.

Consider the application in Figure 3. V_{MID} sets the output common mode voltage of the 1st differential amplifier inside the LT6604-2.5 channel (see the "Block Diagram" section) at 2.5V. Since the input common mode voltage is near 0V, there will be approximately a total of 2.5V drop across the series combination of the internal 1580Ω feedback resistor and the external 402Ω input resistor. The resulting 1.25mA common mode DC current in each input path, must be absorbed by the sources V_{IN}^+ and V_{IN}^-. V_{OCM} sets the common mode output voltage of the 2nd differential amplifier inside the LT6604-2.5 channel, and therefore sets the common mode output voltage of the filter. Since, in the example of Figure 3, V_{OCM} differs from V_{MID} by 0.5V, an additional 625µA (312µA per side) of DC current will flow in the resistors coupling the 1st differential amplifier output stage to the filter output. Thus, a total of 3.125mA is used to translate the common mode voltages.

A simple modification to Figure 3 will reduce the DC common mode currents by 36%. If V_{MID} is shorted to V_{OCM} the common mode output voltage of both op amp stages will be 2V and the resulting DC current will be 2mA. Of course, by AC-coupling the inputs of Figure 3, the common mode DC current can be reduced to 625µA.

Noise

The noise performance of the LT6604-2.5 channel can be evaluated with the circuit of Figure 6. Given the low noise output of the LT6604-2.5 and the 6dB attenuation of the transformer coupling network, it is necessary to measure the noise floor of the spectrum analyzer and subtract the instrument noise from the filter noise measurement.

Example: With the IC removed and the 25Ω resistors grounded, Figure 6, measure the total integrated noise (e_S) of the spectrum analyzer from 10kHz to 2.5MHz. With the IC inserted, the signal source (V_{IN}) disconnected, and the

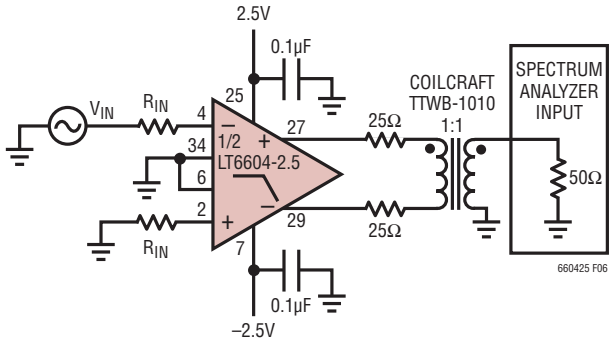

Figure 6

APPLICATIONS INFORMATION

input resistors grounded, measure the total integrated noise out of the filter (e_O). With the signal source connected, set the frequency to 100kHz and adjust the amplitude until V_{IN} measures 100mV_{P-P}. Measure the output amplitude, V_{OUT}, and compute the passband gain A = V_{OUT}/V_{IN}. Now compute the input referred integrated noise (e_{IN}) as:

$$e_{IN} = \frac{\sqrt{(e_O)^2 - (e_S)^2}}{A}$$

Table 2 lists the typical input referred integrated noise for various values of R_{IN}.

Table 2. Noise Performance

PASSBAND GAIN	R_{IN}	INPUT REFERRED INTEGRATED NOISE 10kHz TO 2.5MHz	INPUT REFERRED INTEGRATED NOISE 10kHz TO 5MHz
4	402Ω	18μV_{RMS}	23μV_{RMS}
2	806Ω	29μV_{RMS}	39μV_{RMS}
1	1580Ω	51μV_{RMS}	73μV_{RMS}

Figure 7 is plot of the noise spectral density as a function of frequency for an LT6604-2.5 channel with R_{IN} = 1580Ω using the fixture of Figure 6 (the instrument noise has been subtracted from the results).

The noise at each output is comprised of a differential component and a common mode component. Using a transformer or combiner to convert the differential outputs to single-ended signal rejects the common mode noise and gives a true measure of the S/N achievable in the system.

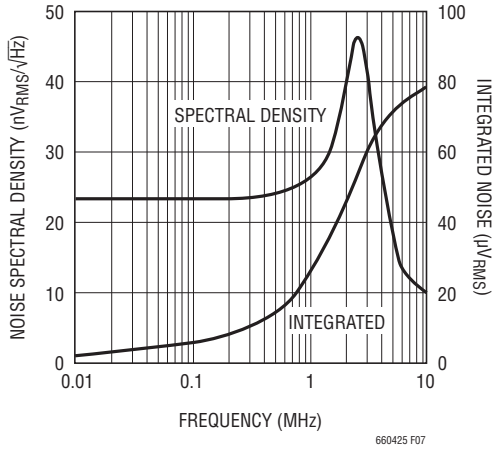

Figure 7. Input Referred Noise, Gain = 1

Conversely, if each output is measured individually and the noise power added together, the resulting calculated noise level will be higher than the true differential noise.

Power Dissipation

The LT6604-2.5 amplifiers combine high speed with large signal currents in a small package. There is a need to ensure that the die's junction temperature does not exceed 150°C. The LT6604-2.5 has an exposed pad (pin 35) which is connected to the negative supply (V^-). Connecting the pad to a ground plane helps to dissipate the heat generated by the chip. Metal trace and plated through-holes can be used to spread the heat generated by the device to the backside of the PC board.

Junction temperature, T_J, is calculated from the ambient temperature, T_A, and power dissipation, P_D. The power dissipation is the product of supply voltage, V_S, and total supply current, I_S. Therefore, the junction temperature is given by:

$$T_J = T_A + (P_D \bullet \theta_{JA}) = T_A + (V_S \bullet I_S \bullet \theta_{JA})$$

where the supply current, I_S, is a function of signal level, load impedance, temperature and common mode voltages. For a given supply voltage, the worst-case power dissipation occurs when the differential input signal is maximum, the common mode currents are maximum (see Applications Information regarding Common Mode DC Currents), the load impedance is small and the ambient temperature is maximum. To compute the junction temperature, measure the supply current under these worst-case conditions, use 43°C/W as the package thermal resistance, then apply the equation for T_J. For example, using the circuit in Figure 3 with DC differential input voltage of 1V, a differential output voltage of 4V, no load resistance and an ambient temperature of 85°C, the supply current (current into V^+) measures 37.6mA per channel. The resulting junction temperature is: $T_J = T_A + (P_D \bullet \theta_{JA}) = 85 + (5 \bullet 2 \bullet 0.0376 \bullet 43) = 101°C$. The thermal resistance can be affected by the amount of copper on the PCB that is connected to V^-. The thermal resistance of the circuit can increase if the Exposed Pad is not connected to a large ground plane with a number of vias.

TYPICAL APPLICATIONS

IQ DAC Output Filter

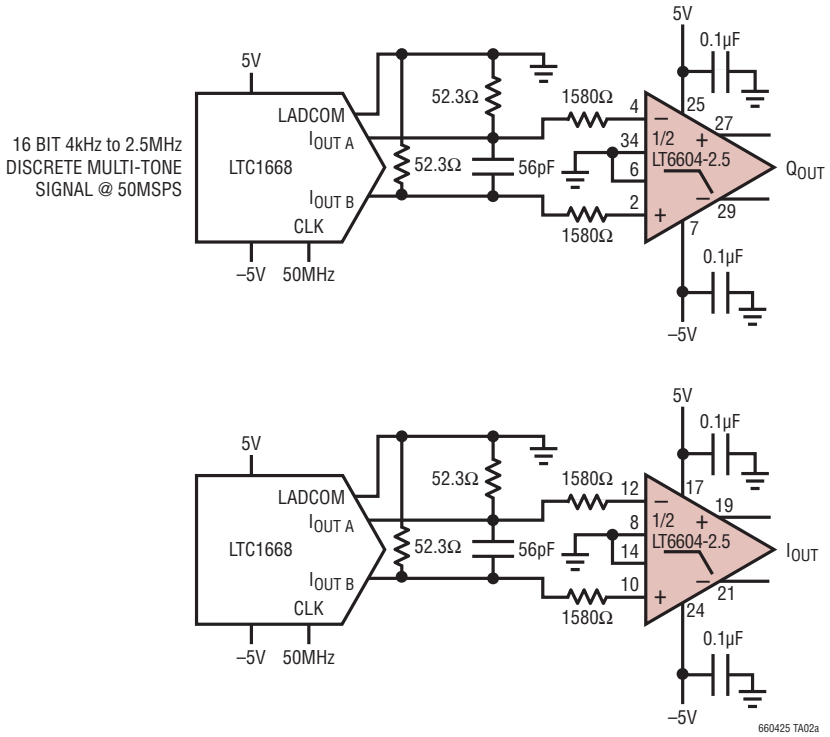

DAC Output Spectrum

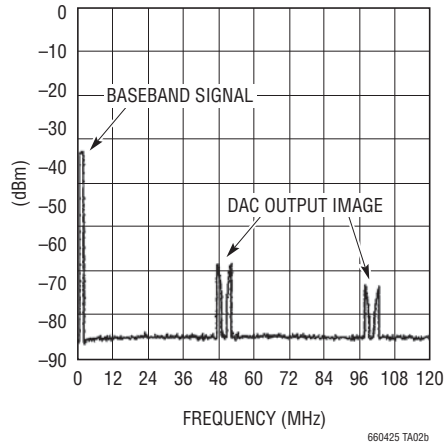

LT6604-2.5 Output Spectrum

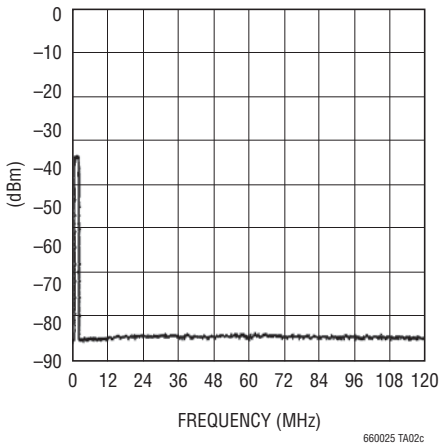

TYPICAL APPLICATIONS

Dual, Matched 5th Order, 2.5MHz Lowpass Filter, Gain = 1

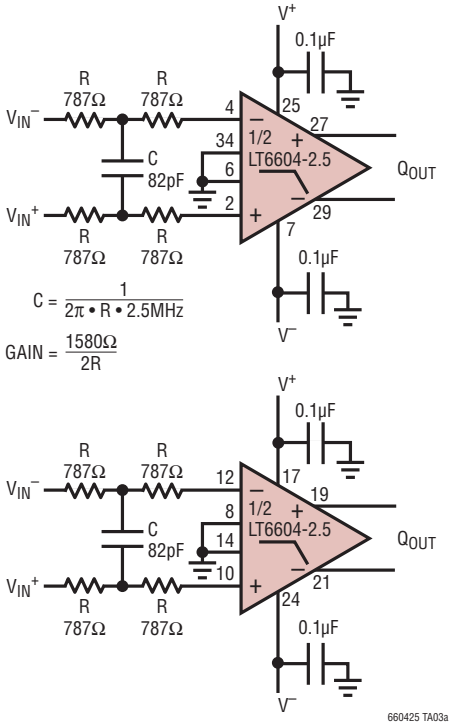

Frequency Response

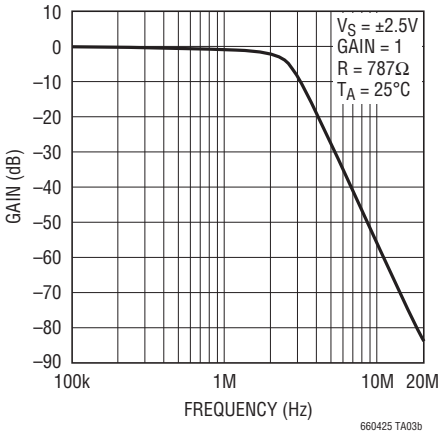

Transient Response Gain = 1

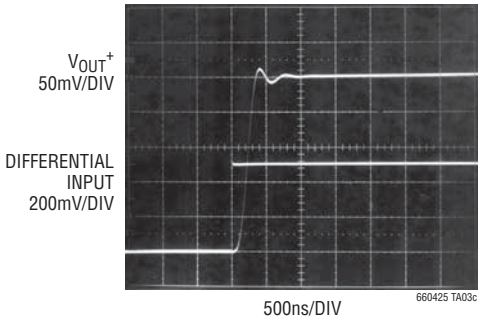

PACKAGE DESCRIPTION

UFF Package
34-Lead Plastic QFN (4mm × 7mm)
(Reference LTC DWG # 05-08-1758 Rev Ø)

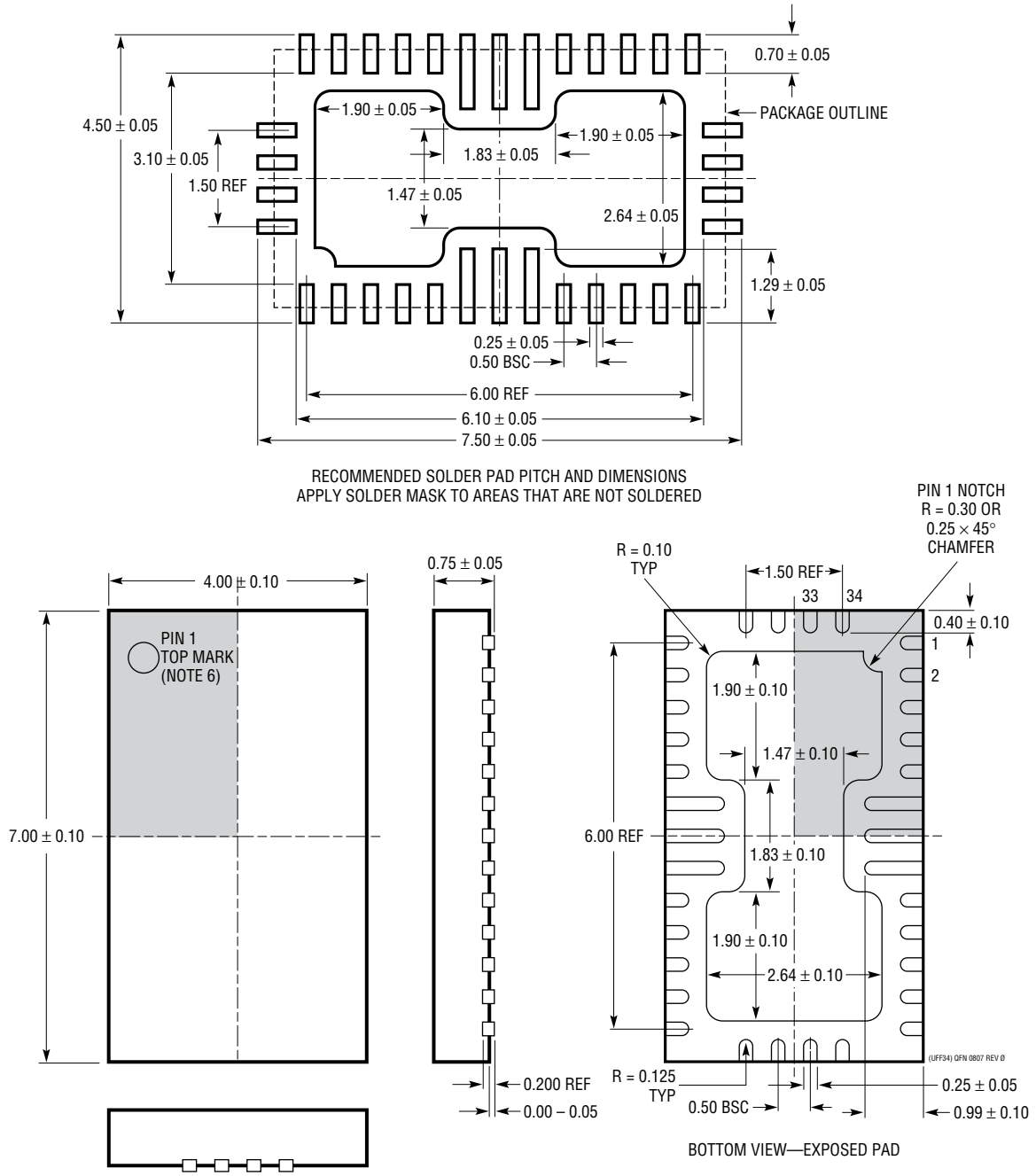

NOTE:
1. DRAWING IS NOT A JEDEC PACKAGE OUTLINE
2. DRAWING NOT TO SCALE
3. ALL DIMENSIONS ARE IN MILLIMETERS
4. DIMENSIONS OF EXPOSED PAD ON BOTTOM OF PACKAGE DO NOT INCLUDE MOLD FLASH. MOLD FLASH, IF PRESENT, SHALL NOT EXCEED 0.20mm ON ANY SIDE
5. EXPOSED PAD SHALL BE SOLDER PLATED
6. SHADED AREA IS ONLY A REFERENCE FOR PIN 1 LOCATION ON THE TOP AND BOTTOM OF PACKAGE

LINEAR TECHNOLOGY

Information furnished by Linear Technology Corporation is believed to be accurate and reliable. However, no responsibility is assumed for its use. Linear Technology Corporation makes no representation that the interconnection of its circuits as described herein will not infringe on existing patent rights.

RELATED PARTS

PART NUMBER	DESCRIPTION	COMMENTS
Integrated Filters		
LTC1562-2	Very Low Noise, 8th Order Filter Building Block	Lowpass and Bandpass Filters up to 300kHz
LTC1565-31	650kHz Linear Phase Lowpass Filter	Continuous Time, 7th Order, Differential
LTC1566-1	Low Noise, 2.3MHz Lowpass Filter	Continuous Time, 7th Order, Differential
LT1568	Very Low Noise, 4th Order Filter Building Block	Lowpass and Bandpass Filters up to 10MHz
LTC1569-7	Linear Phase, Tunable 10th Order Lowpass Filter	Single-Resistor Programmable Cut-Off to 300kHz
LT6600-2.5	Very Low Noise Differential 2.5MHz Lowpass Filter	SNR = 86dB at 3V Supply, 4th Order Filter
LT6600-5	Very Low Noise Differential 5MHz Lowpass Filter	SNR = 82dB at 3V Supply, 4th Order Filter
LT6600-10	Very Low Noise Differential 10MHz Lowpass Filter	SNR = 82dB at 3V Supply, 4th Order Filter
LT6600-15	Very Low Noise Differential 15MHz Lowpass Filter	SNR = 76dB at 3V Supply, 4th Order Filter
LT6600-20	Very Low Noise Differential 20MHz Lowpass Filter	SNR = 76dB at 3V Supply, 4th Order Filter
LTC6601	Low Noise, Fully Differential, Pin Configurable Amplifier/Driver/2nd Order Filter Building Block	
LTC6602	Dual Adjustable Lowpass Filter for RFID	
LTC6603	Dual Adjustable Lowpass Filter for Communications	
LT6604-5	Dual Very Low Noise, Differential Amplifier and 5MHz Lowpass Filter	SNR = 82dB at 3V Supply, 4th Order Filter
LT6604-10	Dual Very Low Noise, Differential Amplifier and 10MHz Lowpass Filter	SNR = 82dB at 3V Supply, 4th Order Filter
LT6604-15	Dual Very Low Noise, Differential Amplifier and 15MHz Lowpass Filter	SNR = 76dB at 3V Supply, 4th Order Filter

Linear Technology Corporation
1630 McCarthy Blvd., Milpitas, CA 95035-7417
(408) 432-1900 • FAX: (408) 434-0507 • www.linear.com
LT 0708 • PRINTED IN USA
© LINEAR TECHNOLOGY CORPORATION 2008